July 21, 1959 H. BIEL ET AL 2,895,730

APPARATUS FOR MAKING ARTICLES STITCHED ALONG A FOLD

Filed April 29, 1955

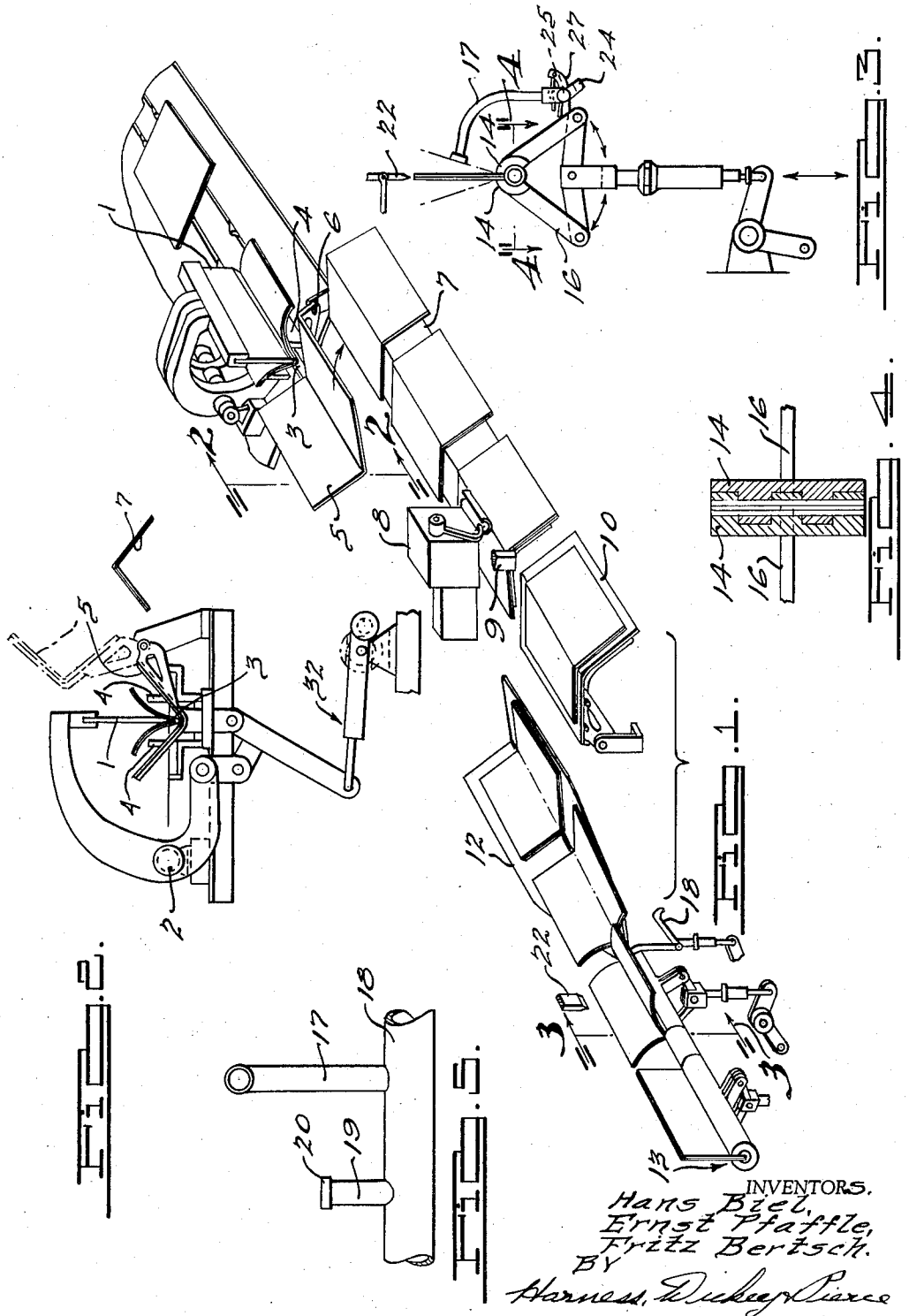

INVENTORS.
Hans Biel,
Ernst Pfaffle,
Fritz Bertsch.
BY
Harness, Dickey & Pierce
ATTORNEYS

United States Patent Office

2,895,730

Patented July 21, 1959

2,895,730

APPARATUS FOR MAKING ARTICLES STITCHED ALONG A FOLD

Hans Biel, Ernst Pfäffle, and Fritz Bertsch, Neuffen, Germany, assignors to Hans Sickinger, Providence, R.I.

Application April 29, 1955, Serial No. 505,006

Claims priority, application Germany April 30, 1954

7 Claims. (Cl. 270—37)

This invention relates to apparatus for making stitched articles and, more particularly, to an improved apparatus for making articles stitched along a fold, such as books and the like.

An object of the invention is to overcome disadvantages inherent in prior methods and apparatus for semi-automatically or fully automatically manufacturing such stationery goods as exercise books, booklets and the like that are stitched along a fold. In previously known methods and apparatus, the individual sheets are either piled up in a stitching device where they are brought into register, or are fed to the stitching device in an already piled and registered condition, the stitched piles thereafter being conveyed to a folding device to be folded.

In accordance with the present invention, the sheets are folded after having been piled up, after which the sheets of the folded and partly opened piles are brought into register while being conveyed to a stitching machine of preferably conventional design. The present invention offers the advantage that while the sheets are brought into register a considerably greater force may be applied without risk of damage to the sheets, and a more accurate result is obtained. This is explained by the fact that the folded sheets possess an increased resistance against creasing as compared with flat sheets. As an additional advantage, conventional stitching machines having an angular stitching saddle may be employed for this automatic sequence of operations. In accordance with the present invention, the staples or stitching threads are accurately placed in the fold that has already been formed and are always located accurately in the apex of the stitching saddle. Prior methods and apparatus are also subject to the defect that heavy piles of thick layers cannot be folded satisfactorily. This last mentioned disadvantage is wholly overcome by the apparatus of the present invention since a thick pile can now be split into several thinner piles to be folded individually and piled up before the stitching machine so as to be conveyed thereto in one pile.

Another object of the invention is to overcome the considerable disadvantage in the prior automatic manufacture of folded sheet piles which resulted from the fact that the time of action of the folding forces in prior devices is too short. The present invention overcomes such disadvantage without any reduction of the working speed, the folded piles, during their passage, i.e., subsequent to stitching and before reaching a cutting device, being seized at the two outer sides of the fold at least once and repressed while being folded together. Thereafter, the books need only be finished trimmed to be ready for sale without requiring any further pressing operations. During repressing or between a succession of pressing operations, such enclosures as blotting paper, leaflets, etc. may be put into the books.

The above as well as other objects and advantages will become apparent from the following description, the appended claims and the accompanying drawing wherein:

Figure 1 is a partially schematic perspective view of the apparatus embodying the present invention, with the feeding mechanism being omitted;

Figure 2 is a sectional view taken along the line 2—2 of Figure 1 and showing the folding die drive and the lugs for holding the pile upright during its advance;

Figure 3 is a sectional view taken along the line 3—3 of Figure 1 and showing the first repressing station and means for opening the folded pile to permit the insertion of an enclosure;

Figure 4 is a cross-sectional view taken along the line 4—4 of Figure 3 and showing the hinge construction of the repressing mechanism; and

Figure 5 is a fragmentary lateral view of the suction and discharge conduits associated with the pile-opening device.

The paper sheets coming from the ruling or printing apparatus of a machine which works the paper in the form of reels or sheets are brought into transverse register by a device not illustrated, collected into piles and conveyed to a folding station (see Figure 1 right hand end). In accordance with the present invention, the folding station is provided with a knife-like die 1 which operates in conjunction with a groove 3 and is capable of being vertically moved into the pressing position. The die 1 presses the sheets into groove 3 thus producing the crease required for the formation of the fold in the sheet pile. At the same time the die 1 keeps the folded pile open so that the latter may be placed on the stitching saddle of a conventional stitching machine. In the embodiment of the invention illustrated, the die 1 is moved downwards into the pressing position. This arrangement may however be varied in such a manner that the die acts from below in which case the paper pile is placed on the die. The driving mechanism for the die 1 is indicated in Figure 2 and includes a shaft 2 on which is mounted an arm 31 carrying die 1, shaft 2 being rockable by a crank and linkage mechanism generally indicated at 32.

Where thick piles are to be worked, it has been found desirable to form first several thinner piles, then to fold these individually with the aid of the die and to pile up these partial piles into thicker piles in front of the stitching machine.

According to the embodiment in which the die acts from the top downward, the carriage 3 is followed by a reversing groove 5 which accommodates the folded piles in an angularly opened position and deposits them on the stitching saddle 7 of a conventional stitching machine after having turned them over 180 degrees (see Figure 2). To ensure free and unhindered entry of the paper piles onto carriage 5, the plate containing the groove 3 is provided on both sides of the groove with lugs 4 to set the paper pile upright during its longitudinal advance. The reversing carriage 5 is capable of being swiveled on a shaft 6 into a position overlying the stitching saddle 7. A conventional feeding mechanism (not shown) moves the pile along the saddle 7 located below the stitching head 8. This movement is limited by the automatically engaged or disengaged stop 9 by means of which the sheets in the pile are brought into register in the direction of the fold. As previously mentioned, the sheets have previously been folded and are no longer in a flat condition, thus offering a higher creasing resistance during the registering operation. After the stitching operation, the stop 9 rises and releases the stitched pile so that it may advance further.

A saddle piece 10 is provided which is arranged behind the stitching saddle of the stitching machine and which functions as a reversing carriage that may be swiveled around shaft 11. The saddle piece 10 also functions to deposit the stitched pile in an angular trough 12 facing upwards. In the front section of the angular trough 12,

a repressing station 13 is provided. As shown in Figures 1 and 3, this comprises a pair of jaws 14, 14 which seizes the back of the stitched pile advanced along trough 12 and which is so constructed that its jaws, after having received the pile, perform a closing motion thereby effecting repressing of the fold while folding the pile close. The two sides of the pile are set upright on entering the pressure jaws, because the walls of trough 12 become gradually steeper towards the front end.

In the embodiment illustrated, two or more repressing stations 13 are preferably arranged successively, thereby permitting the pile to run off freely. The pressure jaws 14, 14 at the various repressing stations include (as shown in Figures 3 and 4) hinged shells which interlock in the manner of ordinary hinges, being mounted on a rod common to all jaw pairs and which are provided with lever pieces 16. These are operated with the swivel motion indicated by arrows in Figure 3. Swiveling of the shell-type jaws into and from the pressing position may for example be effected by means of bellcrank levers with the aid of mechanical, pneumatic or hydraulic transmission means.

At one of the repressing stations, the embodiment illustrated includes a station or point to permit the insertion of such enclosures as blotting paper, leaflets and the like into the books. To this end, a suction device is mounted above the first repressing station in a hinged manner and shaped to attract the book cover. A dividing finger 22 is also provided to open the book whereby the book on advancing is kept open to receive the desired enclosure which will be inserted from above.

In the illustrated embodiment, the suction device comprises a tube 18 connected with a suction pump (not shown), the tube 18 being pivotable with a lever arm 24 around a shaft 25 arranged parallel to the axis of the tube, and being provided with a discharge conduit 19 and a suction conduit 17 extending arcuately above the repressing point 13. The discharge conduit 19 may be closed by means of a flap 20 as shown in Figure 5. The suction tube 17 is brought with its open and free end towards the book positioned at the repressing station by rotating tube 18 around the axis of shaft 25. During this process, the discharge conduit 19 is closed by flap 20, as a result of which the tube 17 attracts the book cover and, while turning back, detaches the book cover from the inner sheets of the book, thereby opening the book cover. At the same time, the finger 22 is inserted from above between the opened book cover and the next sheets, thus keeping the distance between the book cover and the adjacent sheets. When tube 18 is turned back further, flap 20 moves against a stop 27 seen in Figure 3, thereby opening conduit 19. This interrupts the suction effect in tube 17 and releases the book cover. However, the book cover is prevented from automatically returning into its starting position by finger 22 which is still inserted inside the book.

Further and other automatic motions may be incorporated within the range of the repressing stations, as for example, a point for lining the spine of the book. From the repressing stations 13, which may be provided in any desired number, the piles are conveyed in a known manner to a cutting device where the books are trimmed to finished size on three sides.

While it will be apparent that the preferred embodiment of the invention disclosed is well calculated to fulfill the objects above stated, it will be appreciated that the invention is susceptible to modification, variation and change without departing from the proper scope or fair meaning of the subjoined claims.

What is claimed is:

1. In a device for manufacturing exercise books or the like, means for holding a pile of sheets, a die movable downwardly to fold said sheets, a carriage for receiving said pile with said fold pointing downwardly, said carriage being swingable to a position reversing said pile so that said fold points upwardly, a saddle for receiving said reversed pile, a stop engageable by said pile when advanced along said saddle, whereby the sheets of said pile will be brought into register in the direction of said fold while in an angular position with said fold pointing upwardly, means for stitching said fold while supported by said saddle, a second reversing carriage at the end of said saddle for receiving stitched piles advanced therealong, an upwardly facing angular trough alongside said second reversing carriage, said second reversing carriage being swingable to deposit the stitched pile on said trough, and a repressing mechanism engageable with said fold as said pile is advanced from said trough with said fold pointing downwardly.

2. The combination according to claim 1, said repressing mechanism comprising a pair of jaws engageable simultaneously with the opposite side of said pile along the outer surfaces of said fold.

3. The combination according to claim 1, further provided with means adjacent said repressing mechanism for opening the sheets of said pile, whereby an enclosure may be inserted between said sheets.

4. The combination according to claim 3, said last-mentioned means comprising a suction tube, means swingably mounting said suction tube for movement between a position adjacent an upper portion of said pile and a position away from said pile, a discharge tube connected with said suction tube, said discharge tube being normally closed and being openable in response to movement of said suction tube away from said pile, whereby said suction tube will release said sheets, and a finger positioned above said repressing mechanism and movable downwardly between the open sheets.

5. The combination according to claim 1, further provided with a second repressing station in alignment with said first repressing station and engageable with said pile while said fold is pointing downwardly.

6. In a device for manufacturing exercise books or the like, means for holding a pile of sheets, a die mounted adjacent said holding means and movable downwardly to fold said sheets, a V-shaped carriage for receiving said pile in an upwardly open V-shape with said fold pointing downwardly, said carriage being swingable about an axis parallel to and spaced from the carriage apex to a position reversing said pile so that said fold points upwardly, means for feeding said pile from said holding means to said carriage, a saddle spaced horizontally from said carriage for receiving said reversed pile, means for advancing said pile along said saddle, a stop engageable by said pile when advanced along said saddle, whereby the sheets of said pile will be brought into register in the direction of said fold while in an angular position with said fold pointing upwardly, and means for stitching said fold while supported by said saddle.

7. The combination according to claim 6, further provided with a second V-shaped carriage at the end of said saddle, means for advancing stitched piles from said saddle onto said second carriage, and an upwardly facing angular trough alongside said second carriage, the second carriage being swingable to deposit the stitched pile on said trough.

References Cited in the file of this patent

UNITED STATES PATENTS

785,935	Cottrell	Mar. 28, 1905
1,011,864	Seymour	Dec. 12, 1911
1,021,325	Morgan	Mar. 26, 1912
1,163,374	Scott	Dec. 7, 1915
1,202,809	Curry	Oct. 31, 1916
1,287,334	Kast	Dec. 10, 1918
1,945,253	Baker	Jan. 30, 1934