Oct. 5, 1965 B. B. GOALBY ET AL 3,209,881

SENSING MECHANISMS FOR AUTOMATIC VENDING MACHINES

Filed March 25, 1963 3 Sheets-Sheet 1

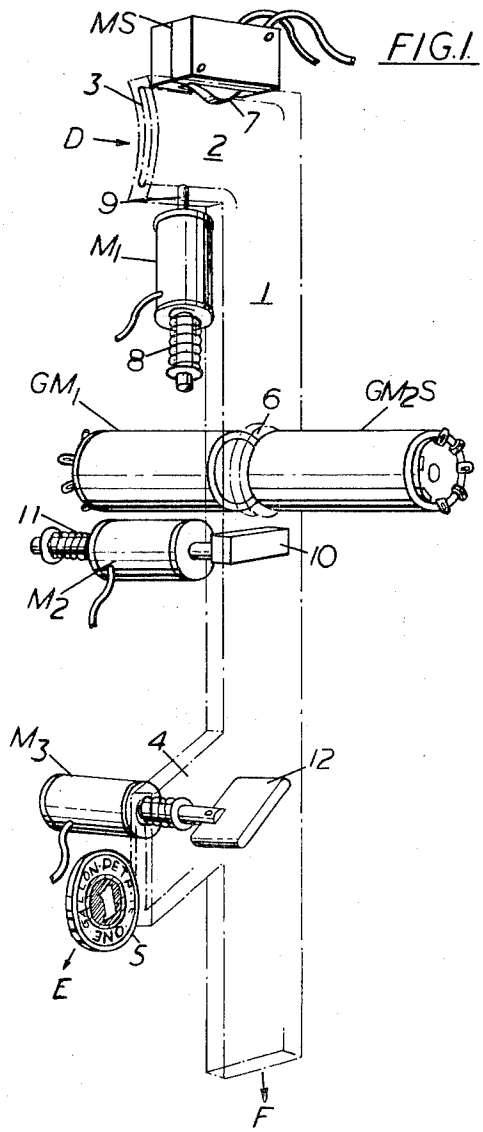

FIG. 1

Inventors
Barry Birch Goalby
Stefan Klaskowski
By
Cushman, Darby & Cushman
Attorneys

Oct. 5, 1965 B. B. GOALBY ET AL 3,209,881

SENSING MECHANISMS FOR AUTOMATIC VENDING MACHINES

Filed March 25, 1963 3 Sheets-Sheet 2

FIG.2

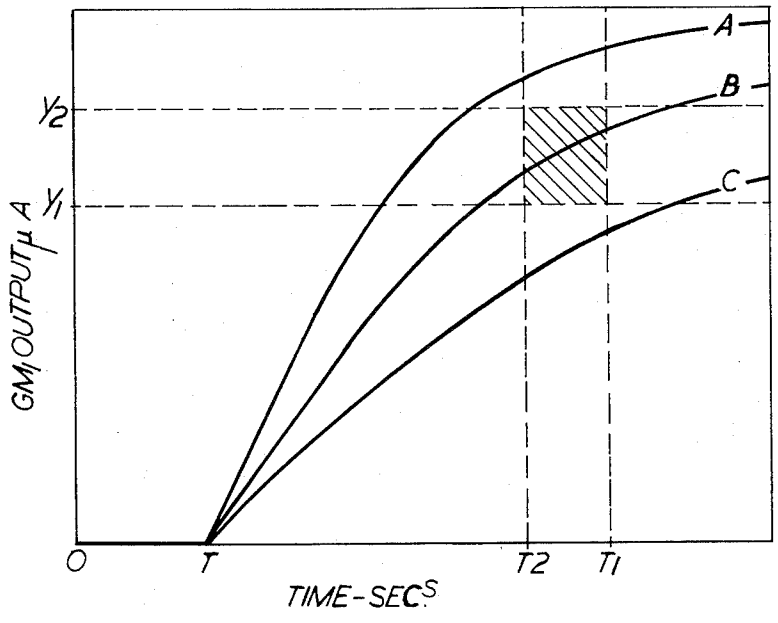

Inventors
Barry Birch Goalby
Stefan Klackowski
By
Cushman, Darby & Cushman
Attorneys

Oct. 5, 1965 B. B. GOALBY ET AL 3,209,881

SENSING MECHANISMS FOR AUTOMATIC VENDING MACHINES

Filed March 25, 1963 3 Sheets-Sheet 3

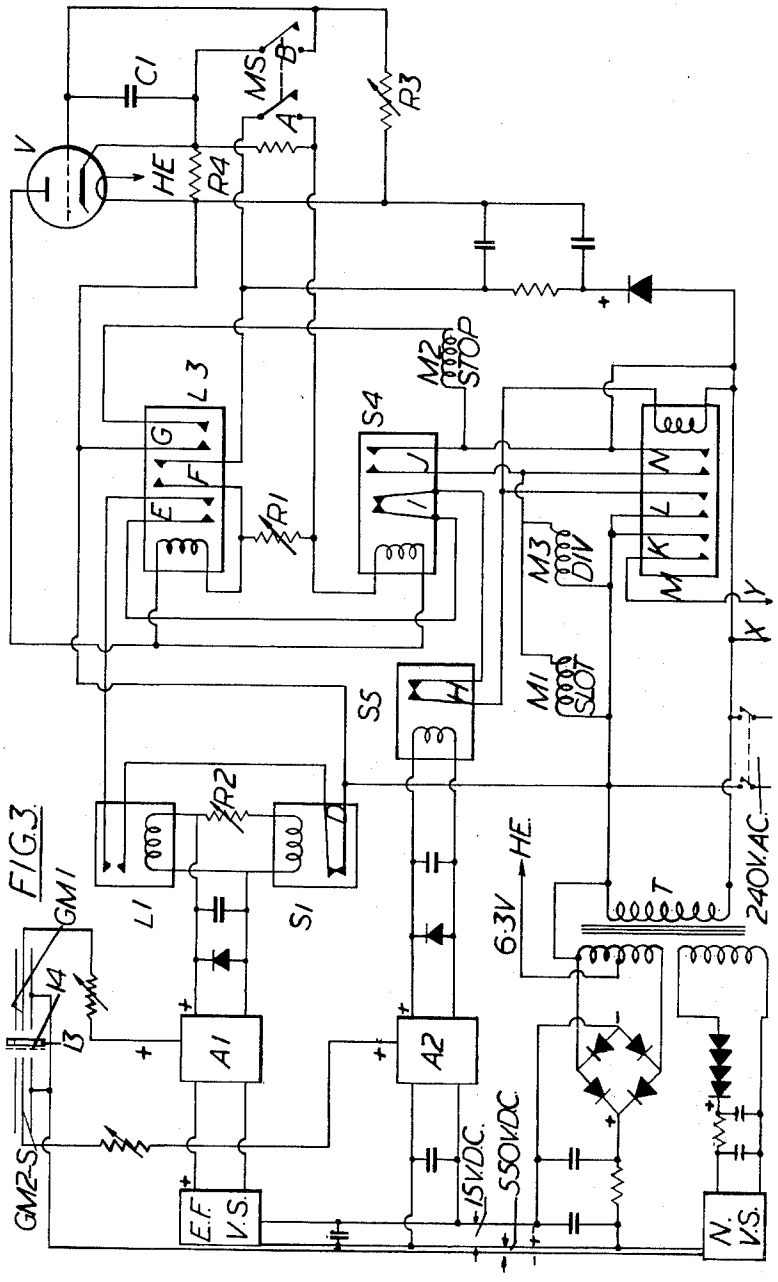

FIG. 3

Inventors
Barry Birch Goalby
Stefan Klackowski
By
Cushman, Darby & Cushman
Attorneys

United States Patent Office 3,209,881 Patented Oct. 5, 1965

3,209,881

SENSING MECHANISMS FOR AUTOMATIC VENDING MACHINES

Barry Birch Goalby, Twyford, and Stefan Klackowski, Ruislip Manor, England, assignors to Thomas de La Rue and Company Limited, London, England, a British company

Filed Mar. 25, 1963, Ser. No. 267,572
Claims priority, application Great Britain, May 8, 1962, 17,697/62
6 Claims. (Cl. 194—4)

This invention relates to sensing mechanisms for automatic vending systems and more particularly to means for actuating the delivery mechanism of a vending machine in accordance with a characteristic, other than or in addition to weight, shape, or size, of a token or other element which the vending machine is adapted to receive.

Vending machines are commonly operated by the insertion therein of coins, the weight, shape and size of which are adapted, in any given instance, to cause the delivery mechanism to operate in accordance therewith. With the development and increasing acceptance of vending machines, there is a need for tokens or other mechanism-actuating device which represent greater monetary values than those of the largest value coins now in use. Unmodified blanks of suitable weight, shape and size would not be suitable for this purpose because they could be virtually valueless per se and could easily be produced and used fraudulently to cause machines to operate. Suitable tokens or other device would necessarily have to include and to operate the delivery mechanism partly at least in accordance with a constant characteristic thereof, other than weight, shape or size, which has been specially imparted thereto and which cannot readily be created or reproduced by unauthorised persons.

The object of this invention is to provide a sensing mechanism for an automatic vending system wherein the delivery mechanism thereof is actuated wholly or in part in response to a specially imparted and constant characteristic which is preferably difficult to counterfeit, of a large monetary value token or other object which the machine is adapted to receive.

Our vending system is particularly applicable to the sale of liquids, for example petrol and motor spirits. With an automatic vending machine constructed for use with conventional coins it would be necessary, for example, to use eight half crowns to obtain 20 shillings worth of petrol and clearly it would be difficult and inconvenient for a motorist to have the requisite number of appropriate coins available at any particular time. The tokens for use with the mechanism of the present invention have substantial security value, in so far as they are difficult to counterfeit, and they may therefore be used as a substitute for coins with a number of advantages with particular reference to weight and bulk. They would, for instance, be less bulky and be lighter than an equivalent value of conventional coins. Although the tokens would have to be obtained from an authorised source, the distribution and availability of tokens in the petroleum industry would not be a problem.

The use of automatic vending systems utilizing our invention would be advantageous not only to the motorist but also to garage proprietors, for by providing pumps which can be actuated by our tokens the need for pump attendants and cashiers would be reduced.

Additionally, the self-service thus provided would be available on a 24 hour basis. It would be possible to use the tokens for the purchase of any grade of motor spirit by arranging for the amount delivered in any given case to be equivalent to the value of the token, it only being necessary to adapt each pump to deliver an appropriate

volume of fuel in accordance with the cost of the fuel being supplied.

According to the invention there is provided a sensing mechanism for a token operated automatic vending machine, such sensing mechanism being adapted to actuate the delivery mechanism of the machine only when a radiation emitting token containing a radioactive isotope or element is inserted into the machine. Preferably, but not necessarily the mechanism is actuated only by radiation of a given penetration range or velocity, (b) a given frequency, or (c) a given total energy or intensity range. Alternatively, the mechanism may be actuated by a signal received by comparing the radiation from a standard radiation emitting token installed permanently in the machine and the radiation emitted from a radiation emitting token inserted into the machine by a purchaser. The setting of the machine can then simply be changed by changing the standard token installed in the machine.

Any convenient substance may be used as the base material for the token or other object, but preferably it includes one or more synthetic resins in moulded, reinforced or laminated form.

Preferably the delivery mechanism is actuated by an electric circuit which includes an electronic component adapted to be influenced by a mechanism, for example one or more Geiger-counter type devices, capable of being activated by the radiation emitted by the token.

Sensing mechanism systems involving differential activation of a pair of suitable interconnected Geiger-Müller tubes are particularly advantageous.

Preferably the sensing mechanism comprises two radiation sensitive devices and an electric circuit associated therewith and with the delivery mechanism, the arrangement being such that the delivery mechanism is only actuated when one of the devices receives a predetermined number or, alternatively, energy level, of emitted particles within a predetermined period and the other device receives substantially no radiation from the token. Conveniently the two radiation sensitive devices may be arranged axially opposite to one another with a space therebetween, the sensing mechanism including a stop member for supporting a token between the devices for a predetermined period. This predetermined period may desirably be controlled by the electrical circuit and initiated by the passage of a token. Means may also be provided for preventing the insertion of a second token during the period that the first token is being sensed.

Desirably also, means may be provided for rejecting from the apparatus all tokens which do not emit radiation of a given level and penetration energy.

When isotopes having low penetration energy of radiation are used for the tokens, one Geiger-Müller tube may be adapted to be activated by radiation of low penetration energy and the other only by radiation of high penetration energy; the sensitivity of the latter tube may conveniently be restricted by providing its window with a shield, e.g., of thin aluminium. In such an instance the electric circuit controlling the delivery mechanism is preferably arranged in such a way that delivery occurs only when the Geiger-Müller tube accepting low penetration energy radiation is activated, but the Geiger-Müller tube accepting only high penetration energy radiation is receiving only the degree of activity normally associated with a background radiation from cosmic and other extraneous sources. A token containing an isotope or element which emits particles with a high penetration energy would cause both Geiger-Müller tubes to be activated and delivery would not be effected.

In a two geiger-muller tube system the tubes may be placed to observe a single active face or, alternatively, they may be placed one on each side of the token. If the token has radioactive material on both surfaces a shield

must be used to restrict the sensitivity of one of the Geiger-Müller tubes so that it will receive only high penetration energy radiation, but if a token having radioactive isotope on one side only is used the token itself can be used as a shield; the token can then be observed by two identical tubes, one on either side, since by correct choice of the materials used for the token it can be arranged that the tube remote from the radioactive side of the token is activated only if the isotope is of high penetration energy.

Alternatively the electric circuit may be so arranged that the delivery mechanism is activated by tokens containing isotope of only high penetration energy. In any arrangement it is preferable that the electric circuits in the vending machine are so arranged that the delivery mechanism is activated only when the number or energy of particles emitted by the radioactive isotope lies between defined limits.

An example of the invention will be described, merely by way of example, with reference to the accompanying drawings, in which:

FIGURE 1 is a perspective view showing the general arrangement of components of a token handling mechanism embodying the invention;

FIGURE 2 is a graph showing radiation level plotted against time for three different tokens; and

FIGURE 3 is a theoretical circuit diagram of apparatus embodying the invention.

Suitable tokens for use in the described example may comprise circular laminated plastic discs having a diameter of approximately 1¼ inches and a thickness of approximately 1/16 inch, and which include in each face the radioactive isotope carbon C14. This token is symmetrical and thus may be inserted in the apparatus either way round.

Referring first to FIGURE 1 of the drawings, a guideway for the tokens comprises a vertical rectangular duct 1 having a right angled connection 2 at its upper end terminating at a slot 3 to permit the insertion of a token as shown by the arrow D. The lower end of the vertical duct is arranged to form the exit for accepted tokens at F to a collecting hopper within the apparatus. A branch junction is provided near the lower end at 4 to return rejected tokens through a slot 5 to the customer. In the diagram a rejected token is seen leaving the slot 5 in the direction of the arrow E. The duct also includes a pair of oppositely disposed apertures 6 for sensing purposes.

A double micro switch MS is mounted above the throat of the duct 2 and includes a resilient detent 7 arranged to be influenced by the insertion of a token and thereby momentarily to close two electrical circuits that will be described in detail later. On the underside of the throat and immediately prior to the micro switch is mounted a solenoid M1 that comprises a spring loaded plunger 8 and an integral projection 9. The arrangement is such that a token can enter when the solenoid is de-energised but is prevented from doing so by the projection 9 when current is flowing in the coil of the solenoid M1.

The circuitry of the apparatus includes means for energising the solenoid M1 upon closure of switch MS, the projection 9 being arranged forcibly to inject an inserted token into the main duct 1 to establish a constant dropping time. The projection 9 also temporarily prevents the entry of further tokens. A similar type of solenoid M2 is provided on one side of the duct immediately below the sensing apertures 6 and, when energised, provides a temporary stop for a token by means of a bar member 10 attached to the opposite end of the spring loaded plunger 11. Tokens are thus correctly placed for sensing during a controlled period. When the magnet is de-energised the token is free to fall to a diverting stage that comprises a deflector blade 12 mounted on the end of a spring loaded plunger of a third solenoid M3. In this instance, when the magnet coil is energised the blade 12 is withdrawn and a satisfactory token leaves the duct at F, but if an unsatisfactory token is presented, the magnet M3 is de-energised and the token automatically ejected at E.

It will thus be seen that an undersized token will fall completely through the duct system and be ejected at E by reasons of the fact that its periphery will not cause the closure of the micro switch MS and no electrical circuits will be completed.

The sensing state comprises a pair of axially arranged Geiger-Müller tubes type EW3H shown in the diagram as GM1 and GM2–S. The tubes are aligned in a position opposite each of the apertures 6 in the duct and have mica windows of 0.9 inches diameter. The latter tube, with the suffix S, is screened by means of a thin aluminum foil disc disposed between the aperture 6 and the mica window. This aluminium disc will effectively form a barrier to C14 radiation but not to radiation from an isotope having a high level of penetration energy.

It is so arranged that by the insertion of a token the closure of the micro switch MS completes a timing circuit and also arrests the falling token by means of the stop member 10, the token thus being presented between the two Geiger-Müller tubes for a predetermined period. In the manner described below the unscreened tube GM1 serves to check that an inserted token possesses a predetermined level of radiation and the screened tube GM2–S serves to check that the isotope in the token has low penetration energy.

Referring to the graph of FIGURE 2, the vertical scale represents the current flowing in the GM tube circuit which is proportional to the level of radiation. The variation of the conductivity of the ionised gas within the tube will cause a proportional variation of current in the appopriate circuit. In the example the circuitry of the apparatus is arranged to discriminate energy levels or count values between Y1 and Y2. The horizontal scale of the graph represents sensing time commencing at 0, that is when the token is inserted into the machine and the switch MS is closed. Point T indicates the start of the timing circuit, i.e., when the token has fallen between the tube faces, and the distance T1–T2 is the actual sensing time. It will therefore be seen that to satisfy the requirements of the machine the token must record a count value of between Y1 and Y2 during the time between T2 and T1. These conditions are graphically represented by the shaded rectangle. In FIGURE 2 the effects from three tokens having different radiation levels are shown by the curves A, B and C. Tokens A and C will be rejected by the mechanism and B will be accepted. It is preferable to select sensing times where different value tokens may be easily segregated; for instance if a longer time is selected when the co-ordinates form a shallow part of the curve, the relative differences of values tend to level out when a state of equilibrium is approached.

The electrical circuit will now be described with reference to FIGURE 3, that includes the following major components and assemblies:

GM1, GM2–S: Geiger-Müller tubes as already referred to.

T: Mains transformer connected to the current supply via a mains isolation switch and having secondary output windings of 550 v., 15 v. and 6.3 v. heater current H.E.

N.V.S.: High tension voltage stabiliser for the G.M. tubes. Includes neon tube stabilisation means. Receives ½ wave rectified and smoothed current from T.

E.F.V.S.: Voltage stabiliser for the discriminating tube amplifier. Comprises a Zener diode emitter follower circuit. Receives full wave rectified and smoothed current from T.

A1 and A2: D.C. amplifiers each comprising multiple transistor stages leading from the GM tubes via an Oc 202 low leak silicon transistor connected in emitter-follower configuration. The collector to base couplings between the amplification stages are fed through potential dividers to maintain stability.

L1: Single-contact relay having open contacts when de-energised.
S1 and S5: Single-contact relays having closed contacts when de-energised.
L3 and M: Three-contact relays having three sets of open contacts when de-energised.
S4: A double-contact relay having one pair of contacts open and one pair of contacts closed when de-energised.
M1, M2, M3: Solenoids associated with the slot, stop and diverter as illustrated in FIGURE 1.
MS: Double-contact micro switch as already referred to.
V: Triode valve.

The operation of the circuit will now be described with reference to the circumstances which obtain when a satisfactory token is handled by the apparatus.

The token is inserted into the slot 3 and the contacts A and B of switch MS are momentarily closed. A circuit is thus completed through A and the coils of relays L3 and S4 become energised. The coil of relay S4 is energised slightly in advance of the coil of relay L3, the time interval being determined by means of a variable resistor R1.

The energisation of the relay L3 closes the respective pairs of contacts E.F. and G, and similarly the relay S4 opens contacts I and closes contacts J with the result that a mains circuit is completed and the three solenoids M1, M2 and M3 are energised. As already explained the slot solenoid M1 assists the token into the main duct 1 where it falls on to the stop member 10 which holds it between the sensing tubes as shown by numeral 13. At the same instant as the insertion of the token, the contact B of the micro switch MS is momentarily closed, this bridges across and discharges a condenser C1 in the timer circuit, the timing cycle commencing upon reopening of the contact B. The grid potential of the triode valve falls as the condenser C1 recharges and the resulting drop of anode current de-energising the relays in a predetermined sequence. The charging rate is determined by a variable resistance R3 while a fixed resistance R4 limits the cathode potential with respect to earth. When the contacts A of switch MS are opened, the circuit is maintained through the contacts F of relay L3 and thence through the coil of relay L3 and also through the coil of relay S4, via the variable resistance R1. The adjustment of the resistance R1 determines the sensing time, i.e., T1–T2, which is the difference between the time that relay L3 breaks and relay S4 makes when they are de-energised. In the example a total time of approximately 3 seconds and a sensing time of ½ second were found to be satisfactory. As already explained the timing commences at 0 in FIGURE 2 but the effective commencement of counting only commences at T.

The radiation level of the tokens 13 is counted by means of the discriminating GM tubes GM1 and if this is within the predetermined limit between Y1 and Y2 during a period set by the timing apparatus as described, the token will be accepted by that part of the apparatus.

The tube GM1 is directly coupled to the amplifier A1 which amplifies and smoothes the signal, the D.C. output being fed into the coils of two sensitive relays L1 and S1. It is so arranged that the output is directly connected to the relay L1 and is arranged to close the relay at the lower limit of radiation Y1. The output is led into S1 via a variable resistance R2 for energising that relay and thus opening the contacts D when radiation is at the upper limit Y2.

The adjustment of R2 therefore provides a predetermined bandwidth or tolerance for the range of token levels of radiation that will be accepted. The output to the relays L1 and S1 is smoothed with a 100 microfarad capacitor and a catching diode is provided to limit the collector voltage during switch off.

The second sensing tube GM2–S oppositely disposed to GM1 is arranged to differentiate between high and low energy radiation and is screened by means of an aluminium disc 14 having a thickness of approximately 0.002 inch. This screen is sufficient to form a barrier to low level radiation but is insufficient to stop high energy radiation, e.g., the radiation emitted by uranium salts. This sensing tubes GM2–S is coupled to a second amplifier A2 that in turn has an output connected to relay S5. The sensitivity of this circuit is so adjusted so that the ambient radiation level does not affect the relay.

It will be seen from the circuit diagram that the positive 550 volt output from the high tension power supply is common with the positive of the 15 volt supply feeding the amplifiers A1 and A2.

A pair of contacts from each relay L1, S1, L3, S4 and S5 are connected in series with the coil of a main relay M and the mains supply. When a satisfactory token has been verified by the apparatus, relays L1 and L3 only remain energised during the sensing time between T2 and T1, relay S4 becoming de-energised at the beginning of sensing time T2. At the end of the sensing time relay L3 is de-energised and the opening of contacts G de-energises the solenoid M2 with the result that the token is allowed to fall from the sensing stage. The main relay circuit will therefore be completed as follows:

S1—contacts D ____ }
L1—contacts C ____ } Radiation within limit Y1 and Y2.
L3—contacts E ____ }
S4—contacts I ____ } Sensing time between T2 and T1.
S5—contacts H. ____ No high level radiation present.

When the coil of the main relay M is energised a pair of contacts L within that relay are closed and act as holding circuit so that it remained energised after the other relays, as referred to above, are de-energised. At the same instant contacts K and N in the main relay are also closed, the latter completes a circuit to maintain current supply to the solenoids M1 and M3 to keep the deflector blade in the inoperative position and the former to supply mains current at X and Y to an external source for direct or indirect operation of a vending machine.

In the arrangement as illustrated a continuous current supply is fed to the vending machine from X and Y and means (not shown) are provided in the servo mechanism of the vending machine momentarily to break the circuit of the coil of the main relay M after delivery is complete. The contacts K, L and N thereby open but will not close again when the current supply is restored until a further satisfactory token is inserted and the cycle of operation as already described is repeated.

The following are examples of unacceptable tokens with the respective variations to the operations of the relay system:

(i) *Correct type of isotope but radiation level too low.*—Relay L1 will not be energised, therefore the main relay circuit will not be completed—after timing sequence the token will be rejected.

(ii) *Correct type of isotope but radiation level too high.*—Both relays L1 and S1 will be energised and contacts D opened, therefore the main relay circuit will not be completed—after timing sequence the token will be rejected.

(iii) *Correct level radiation but from a high energy isotope.*—Relay S5 will be energised, therefore the contacts H will be opened and the main relay circuit will not be completed—after timing sequence the token will be rejected.

Various modifications and alternative arrangements may be incorporated in the apparatus without effecting the general operating principles. For instance, to initiate the timing cycle the token falling down the vertical duct may interrupt a light beam between a lamp and a photo-sensitive device. Alternatively, a metallic foil may be incorporated within the token to provide a change in capacitance between a pair of conductors mounted on opposite sides of the duct. In either instance the resulting signal caused by the passing of a token may through

suitable circuitry, be arranged to commence the timing cycle.

In the illustrated example of the invention it is so arranged that the transformer is directly connected across the current supply when the mains isolation switch is closed. This is necessary to ensure that a heater current is maintained in the triode valve V so that it may always be available for immediate operation. For economy reasons it may be preferable to provide a separate heater supply and a suitable relay system to cause the main transformer only to become live when a token is inserted. In an alternative arrangement, a hinged flap may be fitted over the slot to provide a mechanical time delay system. By this means the operation of the flap may initiate the power supply circuit and the intake slot will only accept the token after a predetermined time during which period the valve is attaining its operating temperature. In a third arrangement the substitution of a cold cathode device could obviate the need for a heater so that after the mains transformer is switched on the apparatus would be immediately available for operation.

We claim:

1. A sensing mechanism for a token operated automatic vending machine including means for detecting radiations from the opposite sides of a token, means for measuring the quantity of radiation emitted from each side of the token and means for enabling a delivery mechanism to be operated only when, during a predetermined period of time, the quantity of radiation from one side of the token is above a given level and the quantity of radiation from the other side of the token is below a different given level.

2. A sensing mechanism as claimed in claim 1, wherein means is provided to hold the token between the means for detecting the radiations during the predetermined period.

3. A sensing mechanism as claimed in claim 1, wherein the predetermined period is measured by means of a timing circuit including a valve, and wherein means is provided to bring the timing circuit and the sensing mechanism into operation upon the insertion of a token into the mechanism and means is provided to cut-off the valve at the end of the predetermined period.

4. A sensing mechanism as claimed in claim 3, wherein a deflector blade is used to reject an unacceptable token.

5. A sensing mechanism as claimed in claim 3, wherein the insertion of a token into the mechanism causes the operation of a solenoid which further assist the passage of the token through the mechanism.

6. A sensing mechanism as claimed in claim 3, wherein after acceptance of a token the electrical supplies to the timing circuit and sensing mechanism are automatically disconnected.

References Cited by the Examiner

UNITED STATES PATENTS

2,526,512	10/50	Snell	194—4
2,894,626	7/59	Mulders	209—111.5
2,983,354	5/61	Ember	194—4
3,104,001	9/63	Barnhart	194—9

SAMUEL F. COLEMAN, *Primary Examiner.*