Dec. 18, 1934. R. M. KEELE 1,984,585

HAIR WAVING APPARATUS

Filed March 10, 1934 3 Sheets-Sheet 1

FIG. 1

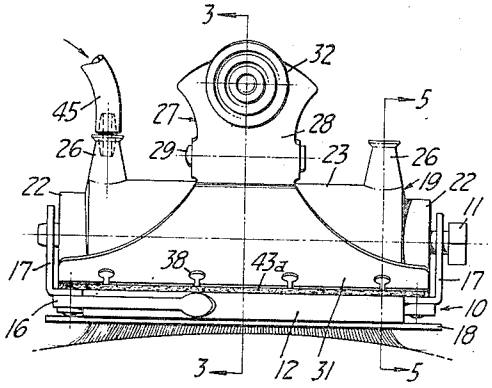

FIG. 2

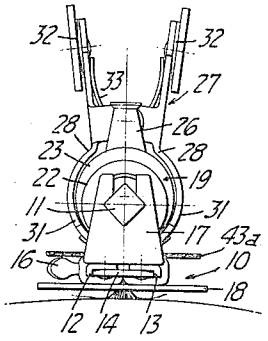

FIG. 4

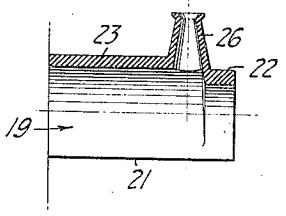

FIG. 3

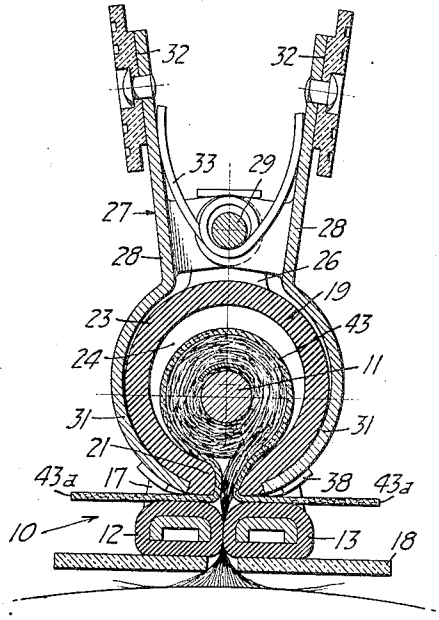

FIG. 5

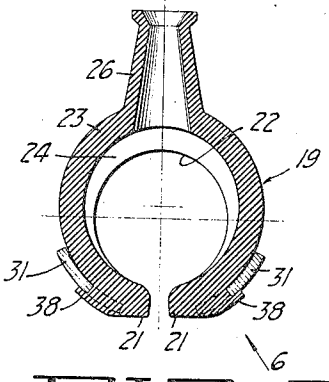

FIG. 6

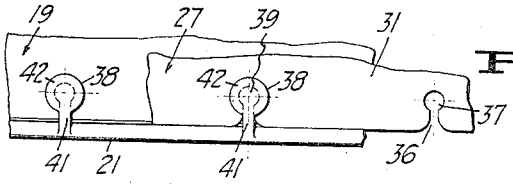

INVENTOR
Ralph M. Keele
BY
Paul D. Fisher
ATTORNEY

Dec. 18, 1934. R. M. KEELE 1,984,585

HAIR WAVING APPARATUS

Filed March 10, 1934 3 Sheets-Sheet 2

FIG. 7.

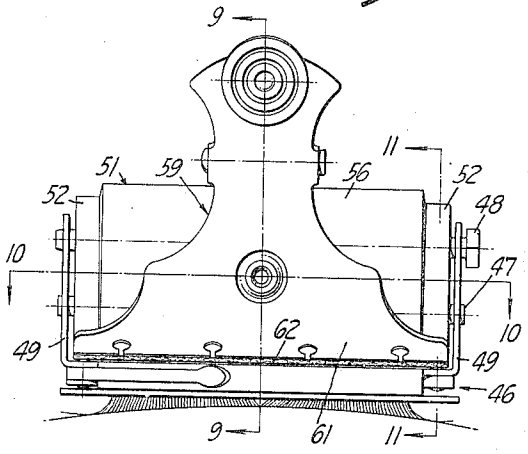

FIG. 8.

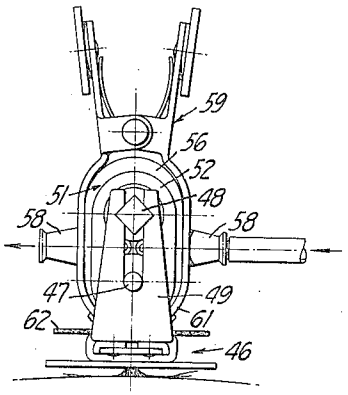

FIG. 9.

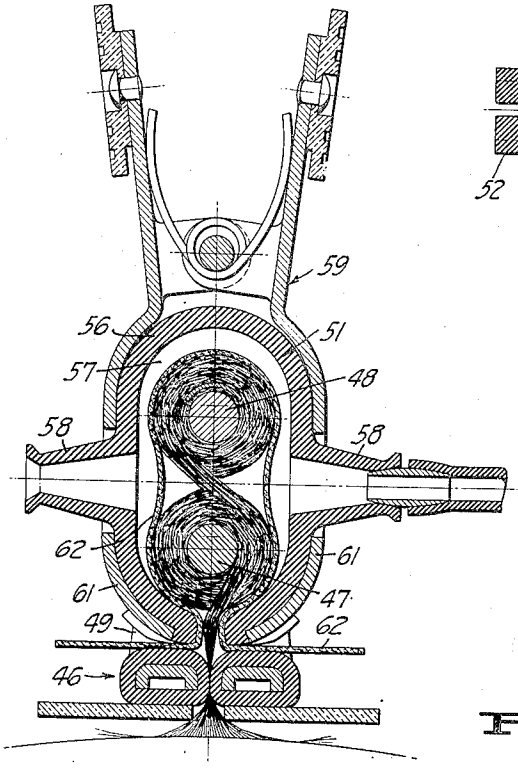

FIG. 10.

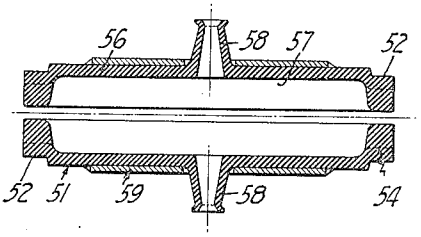

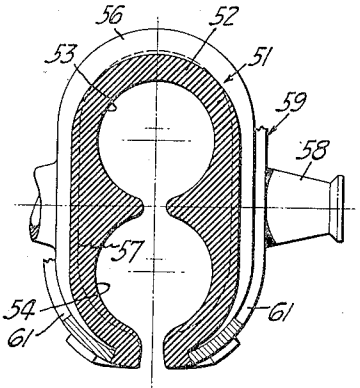

FIG. 11.

INVENTOR
Ralph M. Keele
BY
Paul D. Fuhr
ATTORNEY

Dec. 18, 1934. R. M. KEELE 1,984,585

HAIR WAVING APPARATUS

Filed March 10, 1934 3 Sheets-Sheet 3

FIG. 12.

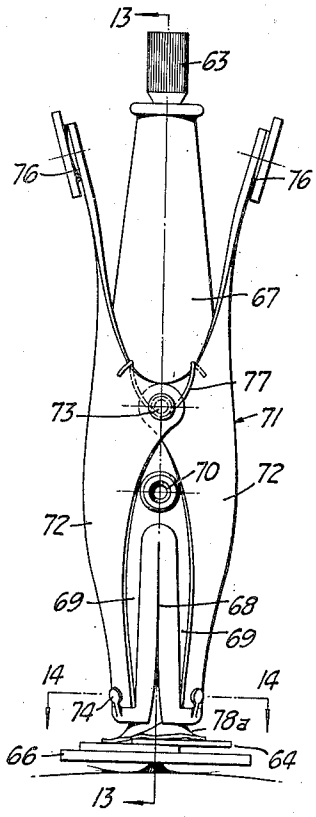

FIG. 13.

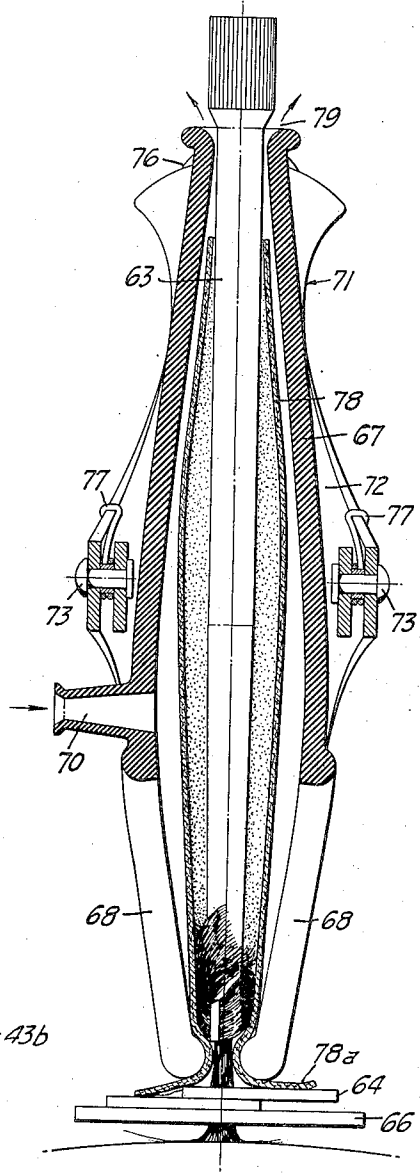

FIG. 15.

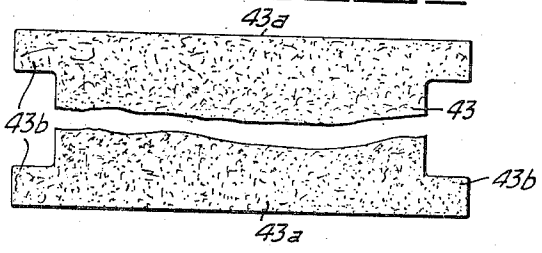

FIG. 14.

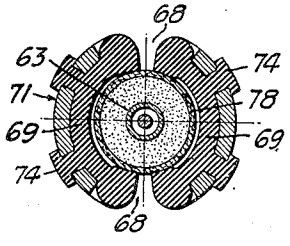

INVENTOR
Ralph M. Keele
BY
Paul D. Fisher
ATTORNEY

Patented Dec. 18, 1934

1,984,585

UNITED STATES PATENT OFFICE

1,984,585

HAIR WAVING APPARATUS

Ralph M. Keele, San Francisco, Calif., assignor to United States Appliance Corporation, San Francisco, Calif., a corporation of California

Application March 10, 1934, Serial No. 714,926

12 Claims. (Cl. 132—36)

This invention relates generally to apparatus for the permanent waving of human hair, wherein the strands of hair are wound upon waving forms or curlers and permanency is imparted to the wave by a heating operation.

In apparatus of the above character, it has been conventional practice to utilize electrical devices which are applied over the waving forms or curlers for a heating operation. While apparatus of this character has met with wide commercial success and is commonly utilized in beauty parlors, injury to the hair sometimes results from prolonged heating or from heating to an undue degree. In place of such electrical heaters, it has been proposed to enclose the waving forms or curlers in jackets or containers into which steam is introduced from a suitable vaporizer or boiler. In such event the steam or like fluid furnishes the requisite heat for imparting permanency to the wave, and opportunities of injuring the hair are minimized, because it is difficult, if not impossible, to heat to the point of dryness, and because the temperature of heat treatment can be definitely limited. Such apparatus has not been placed in general usage, which I attribute to the fact that the metal steam jackets previously utilized have been difficult to manipulate by the average operator, and burning and general discomfort to the subject have been common. Likewise, the metal steam jackets previously utilized have not made it possible to employ prevailing forms of curlers and protectors, as for example the croquignole protector and curler units which are now commonly utilized with electrical heaters.

It is an object of the present invention to provide an improved hair waving apparatus of the type last described, that is, an apparatus which imparts heat to the wound hair by applying steam or like fluid. The invention is characterized by a simple and effective jacket and a holder for the same which serve to apply steam to the wound hair, which can be readily manipulated by an operator without danger or discomfort to the subject, and which are well adapted for use with prevailing types of curlers and protectors.

A further object of the invention is to provide an improved assembly of apparatus which will enable proper application of steam or like fluid for heating the wound hair, and will avoid dripping of hot condensate. In this connection, the invention is characterized by a novel form of moisture-absorbing pad which is applied over the wound hair.

Further objects of the invention will appear from the following description in which the preferred embodiments of the invention have been set forth in detail in conjunction with the accompanying drawings.

Referring to the drawings:

Fig. 1 is a side elevational view, showing my heating device applied to a curler extending parallel to the scalp, as in croquignole waving.

Fig. 2 is an end view of the structure shown in Fig. 1.

Fig. 3 is an enlarged cross-sectional detail taken along the line 3—3 of Fig. 1.

Fig. 4 is a half cross-sectional detail, showing the construction of the resilient rubber jacket utilized with the heating device of Figs. 1 to 3 inclusive.

Fig. 5 is an enlarged cross-sectional detail, taken along the line 5—5 of Fig. 1, but omitting a showing of the curler and the protector.

Fig. 6 is an enlarged detail, showing one manner for detachably securing the rubber jacket to the holder therefor.

Fig. 7 is a side elevational view, showing a modification of the invention, for use with a protector and curler assembly of the type disclosed in my Patent No. 1,887,556 of November 15, 1932.

Fig. 8 is an end view of the assembly shown in Fig. 7.

Fig. 9 is an enlarged cross-sectional detail taken along the line 9—9 of Fig. 7.

Fig. 10 is a cross-sectional detail taken along the line 10—10 of Fig. 7, but omitting showing of the curler and the protector.

Fig. 11 is an enlarged cross-sectional detail taken along the line 11—11 of Fig. 7, but likewise omitting showing of the curler and the protector.

Fig. 12 is a side elevational view showing further modification of the invention as applied to spiral waving.

Fig. 13 is an enlarged cross-sectional view taken along the line 13—13 of Fig. 12.

Fig. 14 is an enlarged cross-sectional detail taken along the line 14—14 of Fig. 12.

Fig. 15 is a plan view of the absorbing pad shown in Figs. 1 to 6 inclusive.

Referring first to Figs. 1 to 6 inclusive, the apparatus shown therein consists generally of a protector 10 which is utilized in conjunction with a curler 11. The protector is similar to that utilized in conventional croquignole waving, and consists of a pair of rubber-covered clamping bars 12 and 13 which are pivotally connected together by link 14. The free ends of these

clamping bars are adapted to be urged together upon a strand of hair by locking means including the cam lever 16. Upright end posts 17 are carried by the protector and are slotted to receive the curler 11. The curler generally incorporates clutching or ratcheting means whereby, after being placed upon the protector, it can be turned by a wrench or other suitable tool for tensioning the wound hair. Underlying the protector there is a suitable heat-insulating shield 18, as for example the shield disclosed and claimed in my Patent No. 1,937,041, of November 28, 1933.

In utilizing apparatus such as just described, the shield 18 is first applied to a strand of hair, the protector 10 is then clamped upon the base of the strand, and the projecting flat portion of the strand is then wound upon the curler, beginning with the tip of the strand and winding toward the protector. The curler is then placed upon the protector and, by further turning, the wound strand is tensioned.

The heating device illustrated in Figs. 1 to 6, inclusive, is in two parts, consisting of a jacket for enclosing the curler and the wound hair, and a holder for the jacket. Preferably, the jacket is detachable with respect to the holder, to permit occasional replacement The jacket 19, which is illustrated, is formed of a single piece of resilient vulcanized rubber. It is generally cylindrical in form, with its lower side interrupted longitudinally to afford the opposed resilient edges 21. The end portions 22 of the jacket are of reduced internal diameter, to fit about the end portions of the curler. The intermediate portion 23 is of enlarged internal diameter, to afford a steam chamber 24, substantially surrounding the wound hair (Fig. 3). It will be noted that the internal circumference of the portions 22 are somewhat eccentric with respect to the internal circumference of the intermediate portion 23. This is for the reason that it is desirable to maintain the edge portions 21 substantially linear and of substantially the same thickness throughout the length of the jacket. Formed integrally with the walls of the jacket are hollow rubber nipples 26, by means of which steam can be introduced into and discharged from the jacket.

The holder, which is designated generally at 27, can be variously constructed, but serves as a mounting for the jacket and as a means for enabling proper application of the jacket to the curler. Thus, in the detail illustrated the holder consists of a pair of metal members 28 pivotally connected together by pin 29. Portions 31 are adapted to be disposed upon opposite sides of the jacket, and have a width substantially equal to the length of the jacket. Upward extensions of members 28 afford finger-hold portions 32. A spring 33 serves to normally urge the portions 31 together.

A suitable means for attaching the lower edge of portions 31 with the rubber jacket is shown in Figs. 5 and 6. In this instance, the lower edges of portions 31 are provided with spaced slots 36, connecting with enlarged opening 37. Formed on the outer sides of the jacket, and adjacent the opposed edges 21, are the integral rubber buttons 38. Each of these buttons consists of a shank 39, a web 41 of reduced thickness, and an overlying head or flange 42. In attaching a rubber jacket to a holder, the shanks 39 are distorted by compression and forced through the slots 36. Expansion of the shanks within openings 36 thereupon retains the jacket in proper position until sufficient force has been applied to the jacket to effect its removal.

The heating device described above is utilized as follows:—Assuming that a strand of hair has been wound upon curler 11 and is properly tensioned, the wound hair is moistened with a suitable waving solution. A pad 43 of moisture-absorbing material, such as flannel, is then applied over the curler, and a heating device is then applied on top of the pad. In applying the heating device the operator first forces the finger-hold portions 32 together in order to spread the jacket. After the jacket has been placed in a position to embrace the curler, finger-hold portions 32 are released to permit spring 33 to urge the lower edges 21 into close proximity with each other on opposite sides of the strand of hair extending between the protector and the curler (Fig. 3). The moisture-absorbing pad 43 is preferably of sufficient length that its end portions 43*a* extend for a substantial distance beyond the jacket and the protector, as shown in Fig. 3. A steam tube 45, connected to a suitable boiler or vaporizer, is then connected to one of the nipples 26.

As steam enters the jacket through tube 45, at about atmospheric pressure, the wound hair is rapidly heated to an elevated temperature. During the initial stage of the heating operation, a considerable amount of the heat is released by virtue of the condensing of the steam. Steam not condensed is permitted to pass out into the atmosphere, either through the open nipple 26 or from the ends of the jacket. Condensate is substantially entirely absorbed by the pad 43, including the wick portions of the pad which are outside the jacket, as well as the portions in contact with the wound hair. Thus, although there is no tight seal between the ends of the jacket and the curler, or between the lower edges 21 of the jacket, there will be no drippage of hot condensate to the discomfort of the subject. If drippage should occur from the corners or edges of the projecting pad portions 43*a*, it has first had an opportunity to cool to such a degree as to be harmless. In this connection, it is desirable to form the ends of the pads as shown in Fig. 15, to afford end tabs 43*b* from which any unabsorbed condensate may drip.

I have found that with steam heating such as described above there is no injury to the hair should the heating be unduly prolonged. Therefore, in treating an entire head of hair, all of the heating devices can be supplied with steam for the same period of time, irrespective of varying amounts of hair upon the different curlers. I have also found that a superior form of wave results which can be readily set, due, presumably, to the absence of drying-out of the hair near the end of the heating operation.

In the modification of Figs. 7 to 11 inclusive, the protector 46 and the curler assembly incorporate the invention disclosed and claimed in my Patent No. 1,887,556. Thus, in this case, two curlers 47 and 48 are disposed one above the other and carried by the slotted protector posts 49. The jacket 51 of the heating device is likewise formed entirely of resilient rubber, but is oval in cross-section in order to amply embrace the curlers. The end portions 52 of the jacket have internal surfaces 53 and 54 which are adapted to fit upon the ends of the curlers. The intermediate jacket portion 56 has an internal

contour to afford the steam space 57. The nipples 58 are formed upon opposite sides of the jacket for inflow and discharge of steam. The holder 59 for the jacket is formed generally similar to the holder illustrated in Figs. 1, 2 and 3, except that the lower opposed portions 61 are apertured to accommodate nipples 58. The holder is also shown detachably secured to the jacket in the same manner as described with respect to Figs. 1, 2 and 3. This device is utilized similarly to the device of Figs. 1 to 6 inclusive, the moisture-absorbing pad 62, however, being considerably longer to properly embrace the two curlers.

In Figs. 12 to 14 inclusive there is shown a modification of the invention suitable for use in spiral waving. As is well known, in spiral waving a bunched strand of hair is wound helicoidally about an elongated waving form, and during a heating operation the curler extends substantially perpendicular to the head. In Figs. 12 and 13 a conventional spiral waving curler is shown at 63, and a strand of hair wound upon this curler extends upwardly through a clamping device or protector 64, below which there is a suitable heat-insulating shield 66. The heating device consists of a jacket 67, tubular in form, and made entirely of resilient vulcanized rubber. The lower portion of this jacket is provided with slots 68, thus affording a pair of opposed, flexible wall portions 69. Connecting with the intermediate portion of the jacket there is a rubber nipple 70 for inflow of steam. The holder 71 consists of a pair of concave metal members 72 which have pivotal connections 73. The lower ends of members 72 have a suitable attachment 74 with the lower edges of the resilient wall portions 69. Upward divergent extensions of members 72 form finger-hold portions 76 for manipulating the holder. Suitable springs 77 are associated with the pivotal connections 73, for normally urging the lower ends of members 72 together.

The modification of Figs. 12 to 14 inclusive is utilized as follows:—After a strand of hair has been applied to the curler, it is wrapped with moisture-absorbing material 78, such as flannel. The operator then applies the heating device by forcing finger-hold portions 76 together to spread the lower part of the jacket, after which the jacket is slipped over the curler and the wound strand. After the jacket has been properly positioned upon the holder, the finger-hold portion 76 is released, thus permitting the lower part of the jacket to be contracted about or immdiately below the lower end of the curler. Steam is then applied to the nipples 70 in the same manner as has been previously described. The opening 79 in the upper end of the jacket is of sufficient size to permit venting of steam to the atmosphere. The lower skirt 78*a* for the moisture absorbing material serves as a wick in absorbing condensate.

I claim:

1. In permanent hair waving apparatus, a one-piece jacket formed entirely of resilient vulcanized rubber and adapted to be applied about a waving form to provide a steam chamber, one wall of said jacket having an opening for inflow of steam.

2. In permanent hair waving apparatus, a jacket adapted to be applied about a waving form, said jacket having flexible walls formed of resilient rubber, one wall of said jacket having an opening therein for inflow of steam, and a holder to which said jacket is attached, said holder including a pair of opposed relatively movable members, said members being attached to said flexible walls.

3. In permanent hair waving apparatus, a jacket adapted to be applied about a waving form, said jacket being formed of a single integral piece of resilient rubber, and a holder to which said jacket is detachably secured, said holder including opposed relatively movable members secured to opposed wall portions of the jacket.

4. In permanent hair waving apparatus, a jacket formed with two flexible walls formed of resilient material and adapted to be spread apart, said jacket being formed to afford an opening for inflow of steam, a holder including two opposed relatively movable members normally urged together, and means for attaching said members to the flexible walls of the jacket.

5. A heating device for use in permanent waving in conjunction with a curler upon which a strand of hair is wound, said device comprising a jacket formed of resilient rubber, and including two opposed flexible walls capable of flexing to facilitate application of the jacket about the curler, said jacket being formed to afford an opening for inflow of steam, a holder including two opposed relatively movable members normally urged together, and means for attaching said members to the flexible walls of the jacket.

6. A heating device for use in permanent hair waving in conjunction with a curler upon which a strand of hair is wound, a jacket formed of resilient rubber and including two opposed flexible walls capable of flexing to facilitate application of the jacket about the curler, said jacket being formed to afford an opening for inflow of steam, a holder adapted to embrace the jacket and including two opposed relatively movable members normally urged together, and means for attaching said members to the flexible walls of the jacket.

7. In a heating device for use in permanent hair waving, in conjunction with a protector which is clamped about a strand of hair and a curler which is disposed adjacent the protector and parallel thereto; a one-piece jacket of resilient material adapted to embrace the curler, the jacket having two opposed longitudinal edges adapted to be interposed between the curler and the protector and on opposite sides of the hair strand extending from the protector to the curler, said jacket being formed to afford an opening for inflow of steam, and a holder comprising two opposed relatively movable members normally urged together, the members of said holder being secured to said jacket at points adjacent said longitudinal edges.

8. In heating means for use in permanent waving in conjunction with a curler of the spiral type, a jacket of resilient rubber adapted to slip over the curler and the hair wound thereon, said jacket having an opening formed therein for inflow of steam, and means forming a holder for the jacket adapted to spread one end of the same.

9. In heating means for use in permanent waving in conjunction with a curler of the spiral type, a jacket of resilient rubber adapted to slip over the curler and the hair wound thereon, said jacket having an opening formed therein for inflow of steam, said jacket also having longitudinal slits formed in its one end portion to provide a plurality of flexible wall portions, a

holder comprising a plurality of relatively movable members normally urged toward each other, and means for attaching said members to said wall portions.

10. In a heating device for use in permanent hair waving, in conjunction with a protector which is clamped about a strand of hair and a curler which is carried by the protector and parallel thereto; a one-piece jacket formed entirely of resilient rubber adapted to removably embrace the curler with the ends of the curler extending from the ends of the jacket, the jacket having two opposed longitudinal edges adapted to be interposed between the curler and the protector and on opposite sides of the hair strand extending from the protector to the curler to seal the jacket around the curler and form a steam chamber, said jacket being formed to afford an opening for inflow of steam.

11. In a heating device for use in permanent hair waving, in conjunction with a protector which is clamped about a strand of hair and a curler which is adapted to be carried by the protector and parallel thereto; a jacket adapted to embrace the curler with the ends of the curler extending from the ends of the jacket, the jacket having two opposed longitudinal edges of resilient material adapted to be interposed between the curler and the protector and on opposite sides of the hair strand extending from the protector to the curler to seal the jacket around the curler and form a steam chamber, said jacket being formed to afford an opening for inflow of steam, and spring-biased means for urging said longitudinal edges together upon the hair strand extending from the curler to the protector.

12. In a heating device for use in permanent hair waving, in conjunction with a protector which is clamped about a strand of hair and a curler which is adapted to be carried by the protector and parallel thereto, a jacket adapted to embrace the curler with the ends of the curler extending from the ends of the jacket, the jacket having two opposed longitudinal edges adapted to be interposed between the curler and the protector and on opposite sides of the hair strand extending from the protector to the curler, said jacket being formed to afford an opening for inflow of steam and the inner wall of the jacket being recessed to form a steam flow space communicating with said opening, and spring-biased means for urging said longitudinal edges together upon the hair strand extending from the protector to the curler.

RALPH M. KEELE.