(No Model.) 2 Sheets—Sheet 1.

G. A. ENSIGN.

CUTTER HEAD.

No. 590,493. Patented Sept. 21, 1897.

FIG. 1.

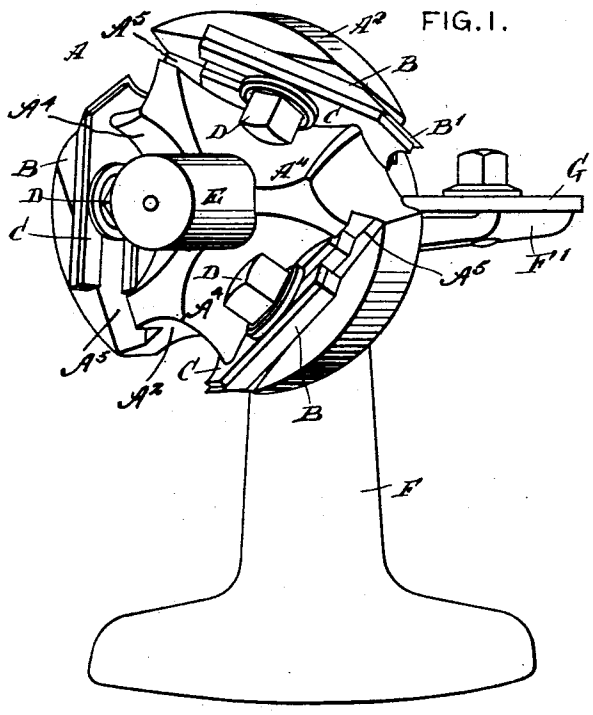

FIG. 2.

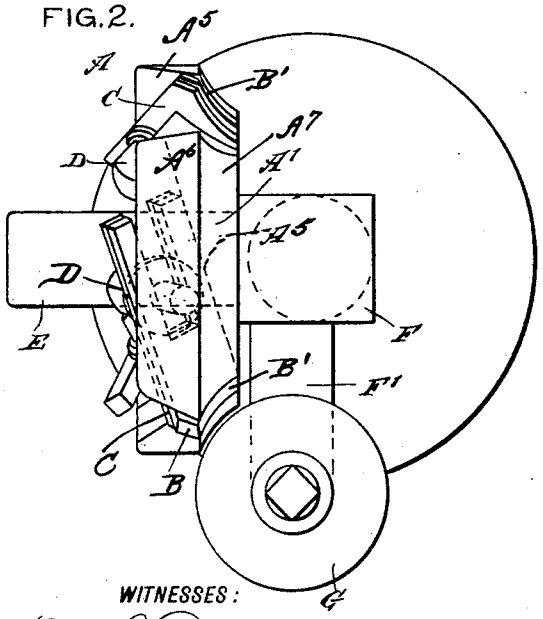

FIG. 3.

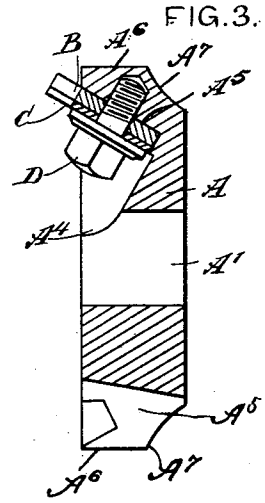

WITNESSES:

Donn Twitchell

Geo. G. Hoskins

INVENTOR

G. A. Ensign

BY

ATTORNEYS.

THE NORRIS PETERS CO., PHOTO-LITHO., WASHINGTON, D. C.

(No Model.) 2 Sheets—Sheet 2.

G. A. ENSIGN.

CUTTER HEAD.

No. 590,493. Patented Sept. 21, 1897.

Fig. 4.

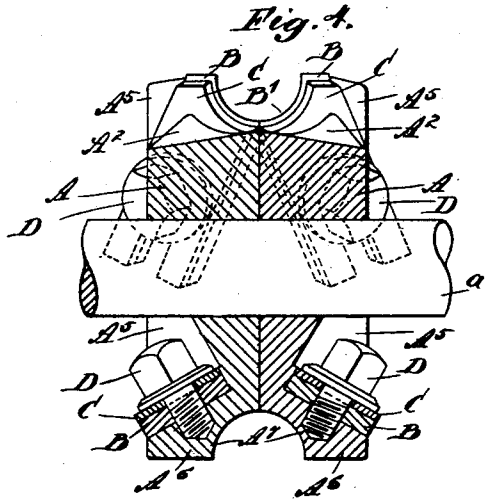

Fig. 5.

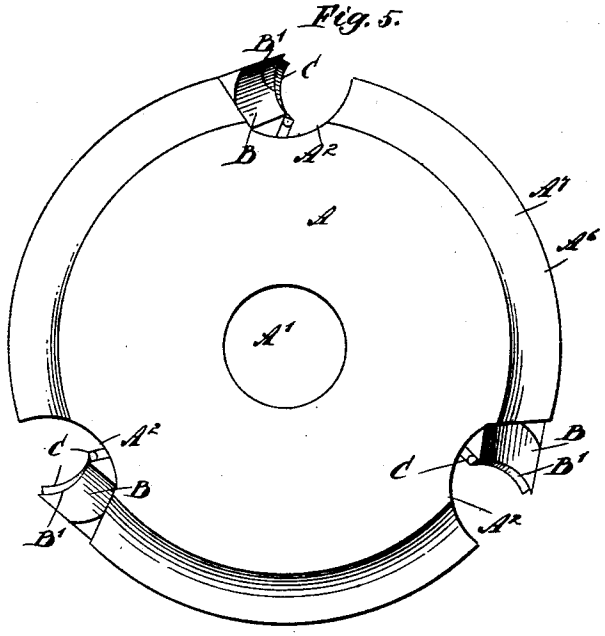

WITNESSES:

Geo. C. Cheney

Theo. G. Hoster

INVENTOR

G. A. Ensign

BY Munn & Co.

ATTORNEYS.

THE NORRIS PETERS CO., PHOTO-LITHO., WASHINGTON, D. C.

UNITED STATES PATENT OFFICE.

GEORGE A. ENSIGN, OF DEFIANCE, OHIO, ASSIGNOR TO THE DEFIANCE MACHINE WORKS, OF SAME PLACE.

CUTTER-HEAD.

SPECIFICATION forming part of Letters Patent No. 590,493, dated September 21, 1897.

Application filed December 4, 1896. Serial No. 614,442. (No model.)

To all whom it may concern.

Be it known that I, GEORGE A. ENSIGN, of Defiance, in the county of Defiance and State of Ohio, have invented a new and Improved Cutter-Head, of which the following is a full, clear, and exact description.

The object of this invention is to provide a superior apparatus for shaping the inner sides of vehicle-wheel fellies.

The invention consists in such features of construction as will be fully described hereinafter and defined in the claim.

Reference is to be had to the accompanying drawings, forming a part of this specification, in which similar characters of reference indicate corresponding parts in all the figures.

Figure 1 is a perspective view of one section of my invention supported on a knife-setting device. Fig. 2 is a plan view of the same. Fig. 3 is a sectional view of the cutter. Fig. 4 is also a sectional view showing both parts of the cutter mounted in operative position, and Fig. 5 is a face view of one section of the cutter.

The two sections of the cutter-head are duplicates of each other and each consists of a circular plate A with a central orifice A′ to receive the shaft *a*, whereon the cutter is mounted when operated, or to receive the spindle E of the knife-setter, which may consist of a pedestal F, carrying the spindle E and having an arm F′ to carry the setting-tool. The plate A has three grooves A^5, each describing chords of the circle described by the plate and disposed diagonally with reference to the plane of the plate, the arrangement of the grooves A^5 being such that one end of each groove will be coextensive with the greatest thickness of the plate, and therefore will run into the plane peripheral portions A^6 of the plate and also into the concaved peripheral portion A^7 of the plate, while the remaining end of each groove A^5 is of a depth equal to about one-half the width of the plane peripheral portion A^6 of the plate. The bottom walls of the grooves A^5 are straight, as indicated by dotted lines in Fig. 2, as are also the outer walls of the grooves, or those nearest the periphery of the plate, as best shown in Fig. 1.

Each groove A^5 carries a knife B, the curved cutting edge B′ of which has a chord equal to the chord of the curved portion A^7 of the plate A. The chord of the curved portion A^7 has an inclined disposition with reference to the axis of the plate A and extends approximately at an angle of forty-five degrees thereto. The knives B are held against the respective outer faces of the grooves A^5 by bolts D running through the knives and into the portions of the plate A respectively outward from the grooves A^5. Each bolt D holds a chip-breaking plate C against the inner sides of the respective knives B. The grooves A^5 are so disposed with reference to the concaved and inclined portion A^7 of the plate A that the knives B will be held so that their cutting edges B′ will be exactly true with reference to the portion A^7 and therefore engage the work at a very effective angle. The chip-breaking plates C prevent the riving or tearing of cross-grained stock.

The outer face of the plate A is provided with a beveled concavity A^4 adjacent to each groove A^5, which permits the easy insertion of the bolts D and knives B. At the ends of the grooves A^5, which ends have the cutting edges of the knives, concavities A^2 are respectively formed to provide spaces for the chips made by the knives, so that the chips may readily fly from the cutters and will not be confined to clog the same.

The two plates, each constructed as above described, are mounted closely against each other on the driving-shaft *a*, as shown in Fig. 4, so that the concaved portions A^7 of the plates will match with each other to form a true semicircle. The cutting edges B′ of the blades B will also match with each other to describe a semicircle. The fellies to be cut are now fed into this semicircular annular cavity of the cutting-head, whereupon the knives act on the fellies to form the necessary cut.

Having thus described my invention, I claim as new and desire to secure by Letters Patent—

A cutter-head consisting of two circular plates, each circular plate having a peripheral concave portion or groove, the chord of which is disposed angularly with reference to the axis of the plate, the plate also having a

second groove run through the face thereof which is opposite the face to which the first-named groove is adjacent, the second groove describing a chord of the circle described by the plate and the second groove running diagonally through the thickness of the plate so that one end of the groove will lead up to the concave peripheral portion of the plate, and a knife held against one wall of the second-named groove and having its cutting edge projected to the concave peripheral portion of the plate, said cutting edge being curved in conformity with the curve of the concave portion.

GEORGE A. ENSIGN.

Witnesses:
GEO. W. DEATRICK,
JOSEPH BAUER.