April 24, 1962 R. C. BROWN ET AL 3,030,917

COATING OF WEBS AND THE LIKE

Filed Aug. 13, 1958 3 Sheets-Sheet 1

FIG. 1

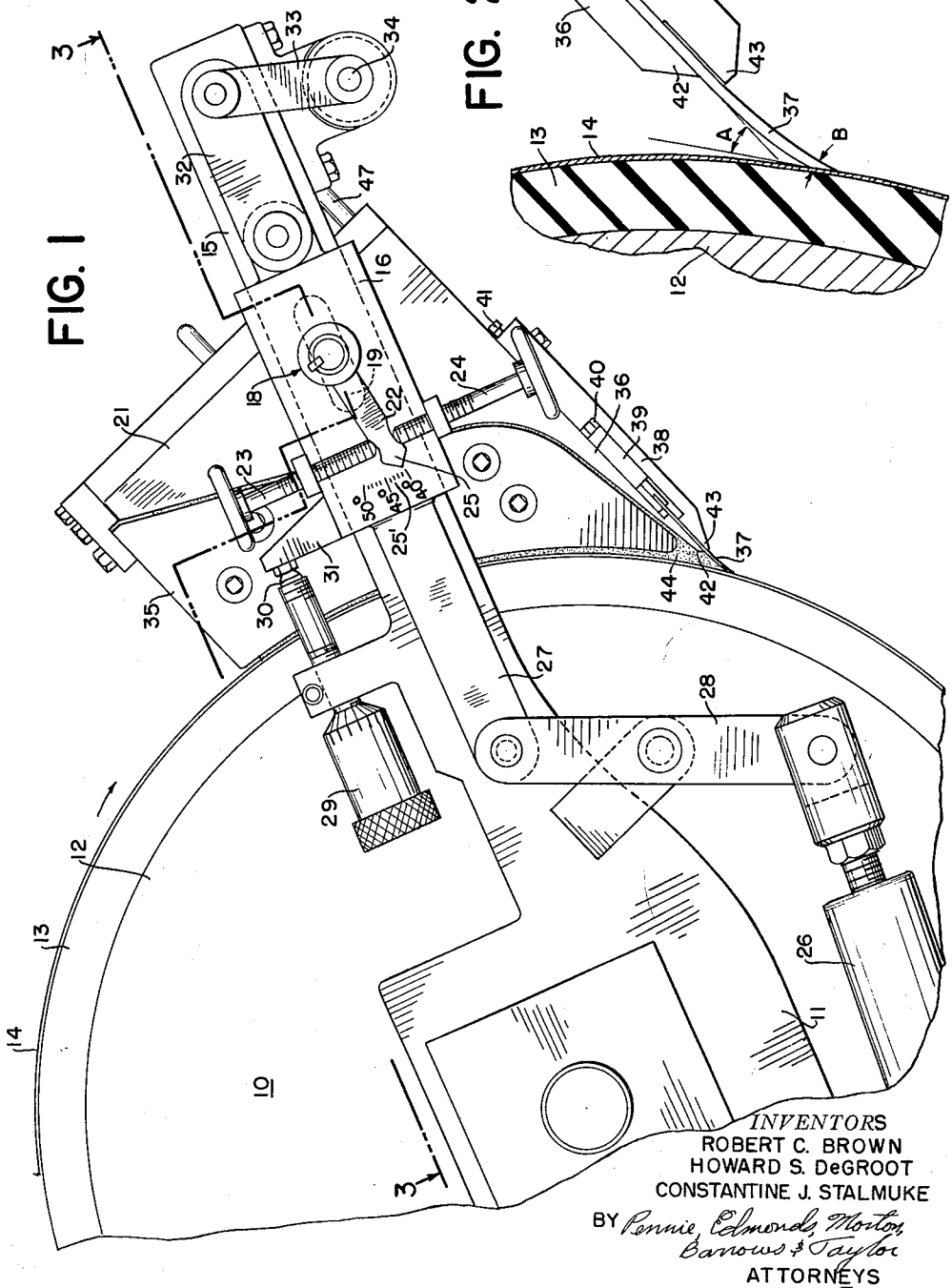

FIG. 2

INVENTORS
ROBERT C. BROWN
HOWARD S. DeGROOT
CONSTANTINE J. STALMUKE

BY Pennie, Edmonds, Morton, Barrows & Taylor
ATTORNEYS

April 24, 1962 R. C. BROWN ET AL 3,030,917

COATING OF WEBS AND THE LIKE

Filed Aug. 13, 1958 3 Sheets-Sheet 2

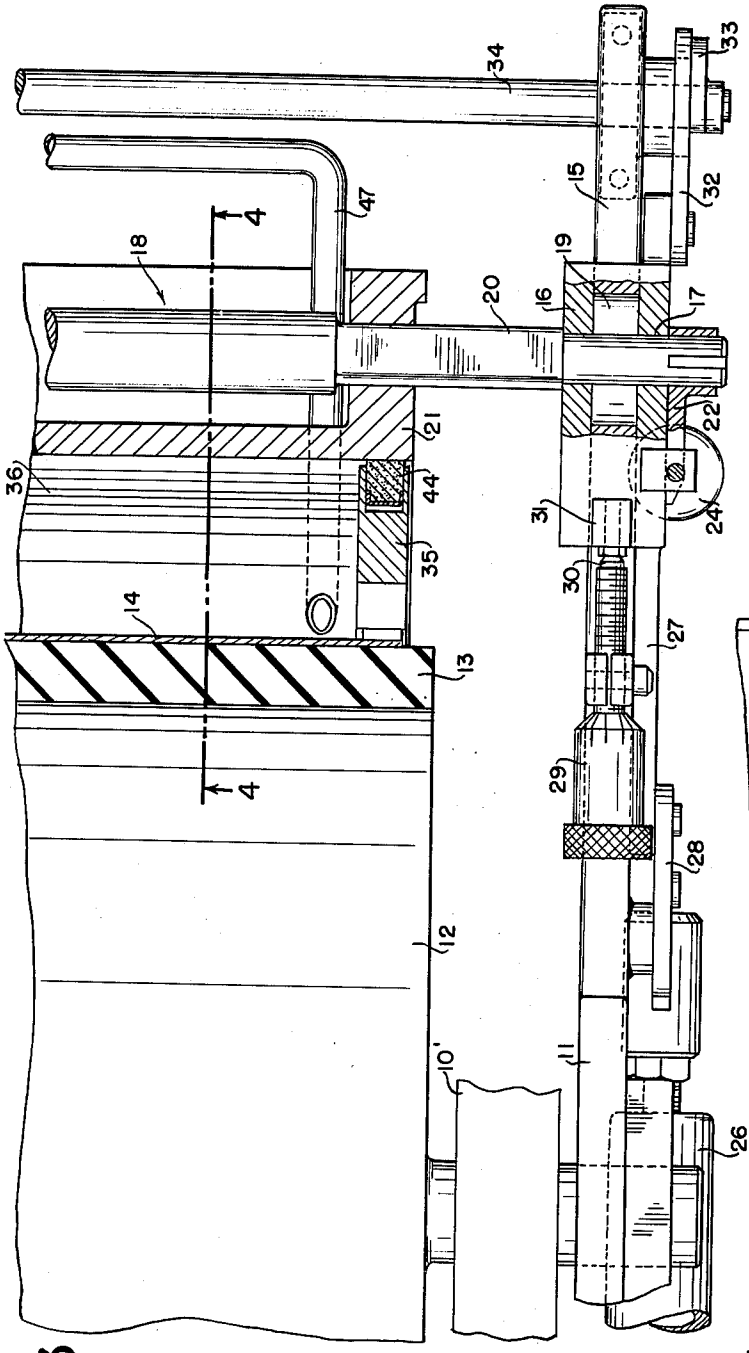

FIG. 3

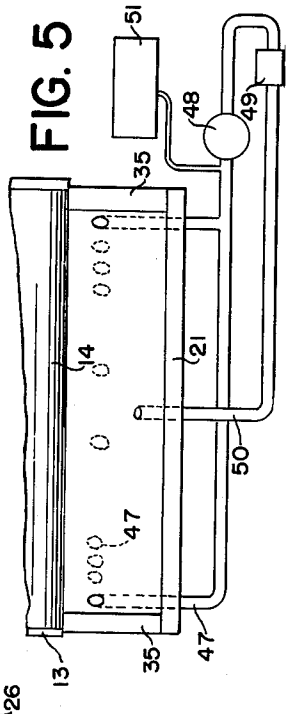

FIG. 5

INVENTORS
ROBERT C. BROWN
HOWARD S. DeGROOT
CONSTANTINE J. STALMUKE
BY Pennie, Edmonds, Morton, Barrows & Taylor
ATTORNEYS

April 24, 1962 R. C. BROWN ET AL 3,030,917

COATING OF WEBS AND THE LIKE

Filed Aug. 13, 1958

3 Sheets-Sheet 3

FIG. 4

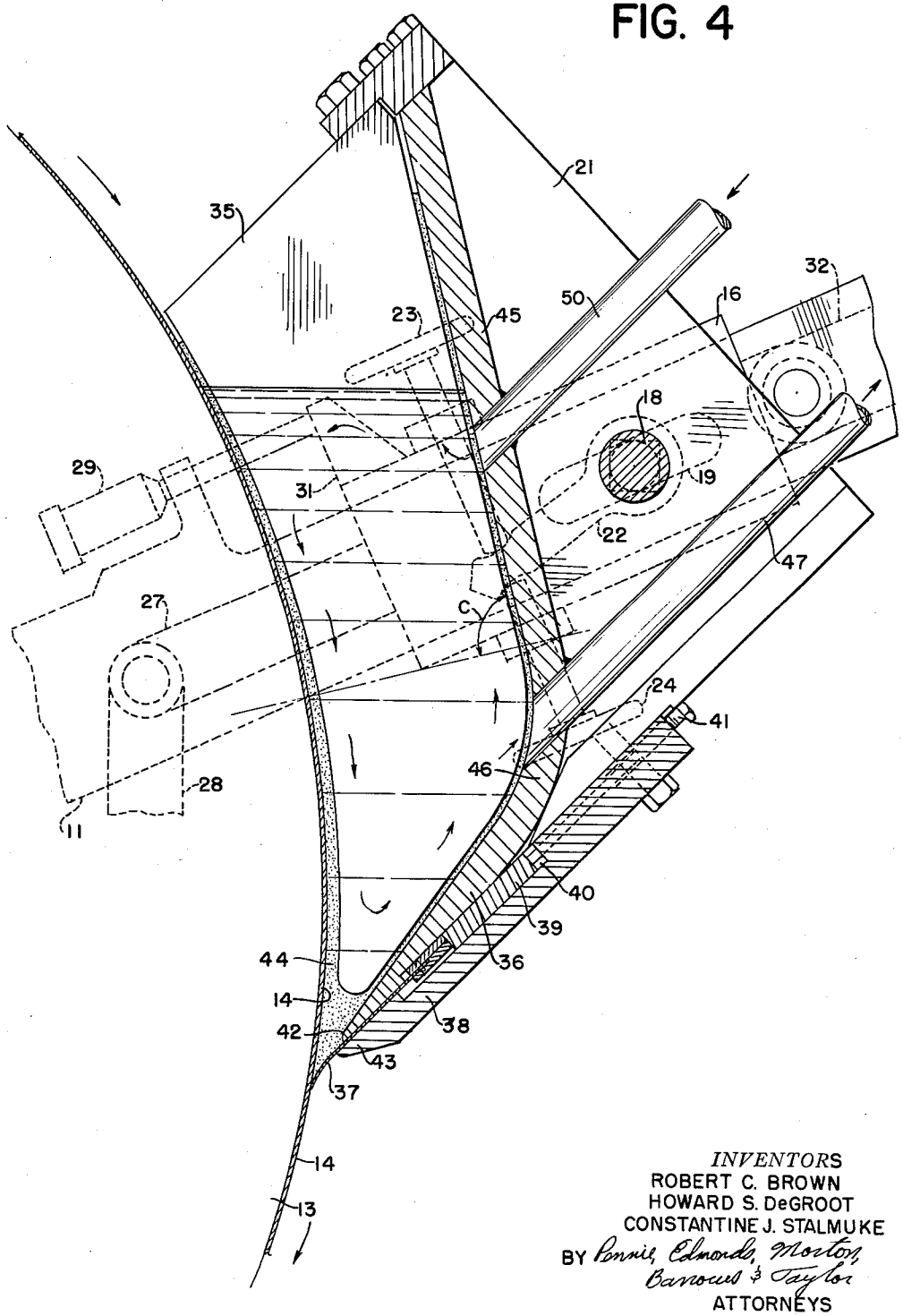

INVENTORS
ROBERT C. BROWN
HOWARD S. DeGROOT
CONSTANTINE J. STALMUKE
BY Ronnie, Edmonds, Morton, Barrows & Taylor
ATTORNEYS

United States Patent Office 3,030,917 Patented Apr. 24, 1962

3,030,917
COATING OF WEBS AND THE LIKE

Robert C. Brown, Howard S. De Groot, and Constantine J. Stalmuke, Rumford, Maine, assignors to Oxford Paper Company, New York, N.Y., a corporation of Maine

Filed Aug. 13, 1958, Ser. No. 754,752
17 Claims. (Cl. 118—413)

The present invention relates to the coating of webs of paper and like material, and more specifically to improved arrangements for applying coatings to moving webs whereby high quality coated surfaces of uniform smoothness may be obtained.

Coating of webs, particularly in the paper industry, has been carried out in a variety of ways, one of the oldest of which is known generally as knife coating. Typical arrangements for knife coating employ a suitable knife or blade, which is pressed against a web, either unsupported or backed by a roll or belt, for the purpose of spreading a thin, relatively uniform layer of coating material on the web. The coating material is introduced onto the surface of the moving web, prior to the knife or blade, and, as the web moves past the blade, the coating material is metered onto the web surface.

A comparatively recent development in the art of knife coating is represented by the apparatus illustrated in United States Patent No. 2,368,176, to Arthur R. Trist. There, the web to be coated travels around or over a backing roll, provided with a resilient surface, and a knife or blade is pressed resiliently against the web supported by the roll. The blade is disposed at an angle of about 60° with respect to the web surface, with the working edge of the blade pointing in the direction of web movement, and coating material, applied to the web as it travels toward the blade edge, is metered onto the moving web surface by the blade. In some cases, the blade may form, in part, a reservoir for the coating material. A coating apparatus of the general type illustrated in the Trist patent is frequently referred to as a "trailing blade" apparatus, and the terms "trailing blade," "trailing blade coater," or the like, as used herein, refer to an apparatus of the general type shown in the patent, as distinguished from other types of blade or knife coaters.

Trailing blade coaters of known design are useful and generally satisfactory for the application to paper webs of coatings of light coat weight (i.e., in the order of 3–5 pounds per side per ream of 3300 square feet). However, notwithstanding a substantial commercial need or desire therefor, conventional trailing blade coaters have not been adaptable for successful utilization for the application of coatings of heavy coat weights (i.e., 7 or more pounds per side per ream of 3300 square feet). Thus, a conventional coater may be employed with relative satisfaction for applying a coating or film of light coat weight. But, if the coat weight exceeds, in any appreciable amount, about 7 pounds per side per 3300 square feet, coating defects, such as surface scratches, streaks, etc., become noticeable and the coated web is usually not commercially acceptable.

Our experimental work has indicated that trailing blade coaters of conventional design are inherently incapable of applying coatings of heavy coat weight in a manner such that the coated web is of a commercially acceptable quality. In this respect, the coating material always contains or acquires small foreign particles, such as grit, sand, fibers, quartz, etc., and such foreign particles are present even where substantial precautions are taken to filter or otherwise remove them, because foreign matter (e.g., fibers) is continually introduced by the moving web. These foreign particles tend to be trapped at or adjacent the working edge of the blade and, when this occurs,

scratches or other coating defects will appear. In a coating of light coat weight, the problem of scratches and other defects is comparatively negligible. But such defects are readily noticeable in a coating of heavy coat weight and usually render the coated web commercially unacceptable.

In accordance with the present invention, novel arrangements are provided enabling trailing blade coaters to be utilized effectively for applying coatings of heavy coat weight and of a high quality, commercially acceptable nature, while at the same time substantially improving the effectiveness of such coaters for the application of high quality coatings of light coat weight. In its most important aspect, the invention provides a novel trailing blade coating apparatus, in which the blade and web are so oriented, and the effective characteristics of the blade are such, that foreign particles, which would otherwise tend to become trapped at the blade edge, tend to be carried away and prevented from causing extended coating defects. More specifically, the apparatus of the invention incorporates a trailing blade arrangement in which blade angle, blade thickness and blade extension are correlated or combined in a novel manner so that the blade edge tends to be self-clearing of foreign particles. And, while the most effective combination of blade characteristics may vary, depending upon such factors as base sheet characteristics, viscosity and solids content of the coating material, machining speed, coat weight, etc., our experiments indicate that the superior results sought for are realized only when certain determinable blade characteristics are within a relatively narrowly defined range.

In combination with improvements in blade characteristics, the present invention also incorporates improved arrangements for handling the coating material, whereby to reduce substantially the likelihood of foreign particles reaching the blade edge to cause coating defects. In accordance with this aspect of the invention, improved reservoir means are provided for the coating material and improved arrangements are provided for circulating the coating material to and from and within the reservoir, all to the end that material containing foreign particles is removed with great efficiency. Certain aspects of the improved arrangements for handling the coating material are described and claimed in the co-pending application of Edward V. Ahara et al., Serial No. 754,753, filed August 13, 1958, for "Coating of Paper Webs and the Like," executed concurrently herewith and owned by the assignee of this application, and the present invention is concerned with such handling arrangements in combination with the improved blade characteristics.

For a better understanding of the invention, reference should be made to the following detailed description, and to the accompanying drawing, in which:

FIG. 1 is a fragmentary elevational view of a trailing blade coater incorporating the improved features of the invention;

FIG. 2 is an enlarged, fragmentary, cross-sectional view illustrating details of the apparatus of FIG. 1;

FIG. 3 is a cross-sectional view taken on line 3—3 of FIG. 1;

FIG. 4 is an enlarged cross-sectional view taken on line 4—4 of FIG. 3; and

FIG. 5 is a simplified schematic representation of a circulation system used in the apparatus of FIG. 1.

Referring now to the drawing, and initially to FIG. 1 thereof, the reference numeral 10 designates, generally, a trailing blade coater, which may be conventional in its general construction and includes a support 10' rotatably mounting a backing roll 12 and supporting a frame 11. The roll 12 is arranged to be driven, by suitable means (not shown), and is usually of large diameter (e.g., 40

inches). An outer covering 13, of rubber or like resilient material, is provided about the roll to form a resilient backing surface. Conventionally, the coater is associated with apparatus (not shown) for supplying and carrying away web material, such as paper, and, in the illustrated apparatus, a web 14 is supported by the resilient outer surface 13 of the backing roll and is arranged to move clockwise around the roll as the roll rotates.

The frame 11 of the illustrated apparatus includes spaced arms 15, on which are slidably supported blocks 16. The blocks 16 have suitable bearing means 17 (FIG. 3) for rotatably supporting a shaft 18, the frame arms 15 being provided with elongated slots 19 to accommodate the shaft 18 in various positions. The shaft 18 has end portions 20 of non-circular cross-section, which are received in openings of corresponding shape in a reservoir frame 21, the arrangement being such that the reservoir frame 21 is effectively fixed to the shaft 18.

One end of the shaft 18 has keyed thereto an arm 22 adapted to be engaged on opposite sides by adjusting screws 23, 24 and, by appropriate manipulation of the screws, the shaft 18 and reservoir frame 21 may be held in various rotary positions with respect to the blocks 16. One end of the arm 22 may have a pointer 25 thereon cooperating with a suitable scale 25' to provide an indication of the adjusted position of the reservoir frame.

The blocks 16 are movable on the frame arms 15 by means of fluid actuators 26 mounted on the machine frame 11 and connected to the blocks by links 27 and pivoted levers 28, and inward movement of the blocks is limited by adjustable abutment means 29. The abutment means 29 may comprise micrometer-like devices having extendable plungers 30 adapted to engage arms 31 carried by the blocks 16. Operation in unison of actuators 26 on opposite sides of the machine causes the reservoir frame 21 to be moved in a generally radial direction, toward or away from the backing roll 12. And, to assure uniform movement of the opposite ends of the reservoir frame, an equalizer mechanism is provided, comprising links 32, arms 33, and a shaft 34 keyed to the arms 33.

In the illustrated apparatus, the reservoir frame carries a reservoir, which may be formed in part by the frame and which has end walls or dykes 35, and a bottom wall 36 formed, at least in part, by a blade 37. The reservoir has an open side which, when the apparatus is in operation, is closed off by the web 14, so that coating material may be held in the reservoir. During operation of the apparatus, the web 14, moving clockwise around the rotating roll 12, enters the coating material adjacent the top of the reservoir and travels past the working edge of the blade 37. As the web emerges from the bottom of the reservoir, the blade 37, co-acting with the backing roll 12, causes a predetermined layer of coating material to be applied to the web.

In accordance with the invention, the nature, mounting and disposition of the blade 37 are in such relation as to permit coating material to be applied to the web 14 in coat weights heretofore unobtainable without loss of commercial quality in respect of surface scratches, streaks, etc. Thus, the blade is oriented with respect to the web at an angle (indicated at A in FIG. 2) of between 40° and 50°, the blade angle being measured above the blade and between the plane of the undeflected blade and the plane tangent to the web on the line on which the blade, if undeflected, would contact the web. The blade angle range of 40° to 50° is contrary to the presently accepted practice of supporting the blade at 60° to the web and is an important aspect of the invention.

The blade 37 is advantageously formed of spring steel and, in accordance with the invention, has a thickness of 0.010 inch to 0.030 inch. In the illustrated apparatus, the blade passes between the bottom wall 36 of the reservoir and a supporting plate 38, which is bolted or otherwise secured to the reservoir frame. The back edge of the blade is held by a slide block 39 adjustably positioned in a recess 40 by an adjusting screw 41 and, by appropriate manipulation of the adjusting screw 41, the blade may be projected from or retracted toward the supporting edges 42, 43 of the reservoir wall 36 and plate 38. In accordance with the invention, the unsupported extension of the blade, measured from the edge of the supporting plate 38, is between ⅜ and 1¾ inches.

Advantageously, the blade 37 is supported loosely between the wall 36 and plate 38 to provide for limited "floating" movement of the blade. By way of example, a clearance of between 0.004 and 0.012 inch may be provided. When the blade is deflected, as shown in FIG. 2, the blade is supported along the front edge of the plate 38 and presses upward against the wall 36 a short distance back from the front edge.

When the apparatus is readied for operation, the reservoir frame 21 is tilted, by manipulation of the adjusting screws 23, 24, to dispose the blade 37 at the desired angle, within the 40°–50° range, and the blade is projected a desired distance, within the ⅜–1¾ inch range, from the supporting edges 42, 43. The specific arrangements will, of course, vary with different compositions of coating material and with different base web materials and may be determined empirically.

When the foregoing adjustments are made, the actuators 26 may be energized to draw the reservoir frame toward the backing roll, to a limit position determined by the setting of the abutment means 29. And, in accordance with one aspect of the invention, the adjusted relation of the blade and the abutment means is such that, when the reservoir frame is in its inward limit position, the blade 37 is deflected downward and caused to press resiliently against the web 14. Advantageously, the blade is deflected to an extent such that the angle of wear (indicated at "B" in FIG. 2) is about 33°, although the wear angle may vary somewhat with different combinations of blade thickness, blade angle, and blade extension.

Alternatively, the position of the reservoir may be controlled by accurately regulating the pressure of the fluid medium supplied to the actuators 26. In such cases, the actuator force is adjusted to effect a desired blade pressure or deflection, and the force of the deflected blade balances that of the actuators.

After the reservoir frame 21 is moved to its inner limit position, the dykes 35 may be fitted in sealing relation to the walls of the reservoir frame and to the web supported on the backing roll. In this respect, dykes are provided in appropriate shapes and proportions, and a limited amount of adjustability is afforded by means, such as peripheral felts 44, which may be adjusted inward and outward of the dyke edges and which are sufficiently pliable to conform intimately with the surface contours engaged.

Coating of the web 14 is carried out by filling the reservoir with coating material and causing the web to move continuously around the backing roll 12 in a clockwise direction. A uniformly smooth layer of the coating material is metered onto the web, as it emerges below the working edge of the blade 37, and additional coating material is supplied to the reservoir to make up for the amounts consumed.

Advantageously, the supply of coating material is circulated continuously into and out of the reservoir, during a coating operation, and passed through suitable filters to remove foreign particles. However, it is virtually impossible to remove all foreign particles, and a certain proportion of such particles travel to the blade edge. With conventional apparatus, the foreign particles tend to become trapped at the blade edge and cause such coating defects as extended scratches or streaks. With the apparatus of the invention, on the other hand, the utilization of blade thickness, blade angle and blade extension within the specified ranges provides an operating condition in which foreign particles tend readily to pass the blade edge, so that coating defects are substantially minimized. The

quality of the coating is thus materially improved, even in the lighter coat weights, and, for the first time, it is possible to obtain, with a trailing blade apparatus, coatings of heavy coat weight which are substantially free of undesirable, extended surface defects.

In combination with the improved blade arrangements, the new apparatus may advantageously incorporate improved arrangements for handling the coating material, features of which are described and claimed, per se, in the beforementioned co-pending application of Edward V. Ahara, Ralph A. Johnson, Jr., Howard S. De Groot and Constantine J. Stalmuke entitled "Coating of Paper Webs and the Like," Serial No. 754,753, filed August 13, 1958. The improved arrangements for handling coating material include a reservoir of novel design, in which a relative minimum quantity of coating material is held at any one time and in which the flow and circulation of coating material takes place in such a manner that foreign particles present in the coating material are maintained in circulation, to the greatest practicable extent, until removed by screening. One of the features of the improved reservoir is that it is contoured in a manner permitting free circulation of the coating material within the reservoir and avoiding eddy currents, undesirable velocity variations and the like. In addition, the reservoir includes improved arrangements for recirculating portions of the coating material in the reservoir through a filter in a manner enabling highly efficient removal of foreign particles. The combination of the improved reservoir arrangements with the blade arrangements described above results in a greatly improved coating apparatus, capable of applying coatings of significantly greater coat weight than has been possible heretofore, on a commercially acceptable basis, with trailing blade coaters.

Referring particularly to FIG. 4, the reservoir includes the bottom wall **36** and a back wall **45**, formed by the frame **21**. The bottom wall **36** advantageously tapers somewhat toward its forward edge **42** and is so disposed that its upper surface lies at a relatively small angle to the blade **37**. The back wall **45** may be relatively straight and advantageously lies at an angle of about 130° with respect to the bottom wall. A transition wall **46** connects and is tangent to the back and bottom walls and is curved in an arc of large radius, so that there is a smooth, gradual transition from the plane of the bottom wall to the plane of the back wall. By way of example, in a reservoir suitable for use with a backing roll of 40 inch diameter and having back and bottom wall dimensions of about 10 and 5 inches, respectively, the radius of curvature of the transition wall is advantageously around four inches, or more.

As an important feature of the improved reservoir, the spacing of the walls thereof from the backing roll decreases progressively toward the blade edge, and at no level is the spacing greater than at any higher level. At the same time, the size and shape of the reservoir are such that a relative minimum quantity of coating material is in the reservoir at any one time. To this end, the back and transition walls **45**, **46** are so arranged that, at the point of merger between the walls, the plane of the back wall is substantially at right angles to a radius line extending from the backing roll axis to the merger point, and in no event will the back wall lie at an angle (measured above the radius line, as indicated at C in FIG. 4) of less than 90°. The angle C may be larger than 90°, but should not be substantially larger, as that would unnecessarily increase the volume of the reservoir and introduce undesirable circulation characteristics. The foregoing assumes, of course, that the reservoir is disposed to provide a minimum blade angle, within the defined range, as a limit condition. In all other positions of the reservoir, the angle C will be somewhat larger than 90°.

The improved reservoir configuration results in substantial operating advantages, particularly when used in combination with the new blade arrangements. Thus, when the apparatus is in operation, the web **14** moves at high speed (usually upwards of 1000 feet per minute), and the friction of the moving web on the confined coating material initiates a turbulent circulation (counterclockwise as viewed in FIG. 4) of the material. Heretofore, such circulation has resulted in the formation of eddy currents and areas of substantial velocity transition, resulting in the precipitation of foreign particles and their deposit in localized areas. After a short period of operation, the particle deposits reach such magnitude as to begin to feed particles into the circulating coating material to be carried to the blade edge. And filtering techniques are generally unable to remove effectively particles so introduced. Wtih the improved configuration, however, the circulating coating material may flow smoothly along the bottom, transition and back walls without the formation of eddies, and the reservoir cross section is sufficiently uniform, from top to bottom, to avoid excessive velocity transition during circulation. Of particular importance is the fact that the spacing of the reservoir walls from the backing roll, at any level, is less than at any higher level, so that coating material traveling downward in circulation does not undergo a significant transition to lower velocity, such that particles might be precipitated.

As will be apparent, the reservoir may be constructed in an alternative manner, in which the back and bottom walls form a continuously curved plate. However, the same theoretical considerations would be applicable in order to achieve the desired circulation characteristics.

Another important feature of the improved coating material handling arrangements resides in the continuous recirculation, in a novel manner, of portions of the material in the reservoir, whereby to remove foreign particles therefrom in a highly effective manner and thereby maintain the foreign particle content at a practical minimum. In this respect, a phenomenon of circulation has been observed, that the foreign particles in the coating material tend to migrate laterally (i.e. parallel to the backing roll axis) toward certain areas of the reservoir, and particularly toward the ends thereof, and concentrations of foreign particles thus tend to build up at such areas. Accordingly, the improved apparatus includes means, such as recirculating tubes **47**, which open into the reservoir adjacent each end and/or at other areas of particle concentration and are connected to the intake of a liquid pump **48** (FIG. 5). In the illustrated apparatus, the tubes **47** enter the back wall of the reservoir, adjacent the bottom wall thereof and in general alignment with the bottom wall. Particle-laden coating material, circulating upward along the bottom wall, at areas of particle concentration, may thus be directed into the tubes **47** and removed from the reservoir.

Coating material extracted through the tubes **47** is directed, by the pump **48**, through a suitable filter **49**, to remove the foreign particles, and is returned through a tube **50**, which advantageously opens into the upper portion of the reservoir. Coating material consumed during the operation may be made up from a supply, such as indicated at **51**, discharging into the recirculation system.

The optimum number and location of recirculation outlets may vary with reservoirs of different sizes and shapes, but may be determined readily be empirical methods. Thus, areas of particle concentration, in addition to the end areas of the reservoir, may be determined by introducing into a supply of coating material a quantity of foreign particles, such as sand, fibers, etc. Areas of concentration may be determined by observing the location, on the coated web, of surface defects. The foreign particles may also be distinctively colored, if desired, so that their presence in the supply of coating material or on the coated web is readily ascertainable. Generally,

coating apparatus is adaptable for the accommodation of webs of various widths, in which case the reservoir is advantageously provided with a plurality of outlet openings, (e.g., 47', FIG. 5) which may be used or plugged on a selective basis, so that optimum operating conditions may be afforded under most circumstances.

In some instances, it may be desirable and advantageous to operate the coating apparatus with the end dykes 35 removed from the reservoir, in which case the coating material is simply allowed to flow out of the ends of the reservoir, into suitable collector means (not shown), from which the material is drawn to the pump 48. When the end dykes are removed, the outflow of material at the ends of the reservoir is utilized to effect the efficient removal of foreign particles which would otherwise tend to concentrate at the ends, although additional withdrawal outlets may be utilized at other areas of concentration, if any, near the center of the reservoir.

Advantageously, the recirculation system, comprising tubes 47, 50, pump 48 and filter 49, is of such capacity that the volume rate of recirculation is greater than the volume rate of application of the coating material, advantageously by a factor of several times. By way of example only, a typical coating operation may consume coating material at the rate of one gallon per minute, in which case the recirculation rate may be in the order of one or more gallons per minute, and advantageously several gallons per minute.

A combination apparatus, incorporating the improved blade and coating material handling arrangements represents a substantial improvement over known apparatus, in its ability to apply high quality coating in coat weights substantially greater than has been possible in the past, with trailing blade apparatus. By way of example, with an apparatus using a blade of 0.020 inch thickness, at a blade angle of 45° and extension of ½ inch, 8 to 9 pounds per side per ream (3300 square feet) of coating material, having a solids content of 63.7% and a MacMichael viscosity of 104 poises, was applied successfully to a web moving at about 1000 feet per minute. In another example, a coating material having 61.4% solids and a MacMichael viscosity of 120 poises was applied successfully at weights of 16 pounds per side per ream, using a blade of 0.025 thickness set at a blade angle of 45° and extension of 1 11/16 inches, and operating the apparatus at about 1000 feet per minute.

The exact theoretical basis for the improved operation of the new apparatus is not thoroughly understood, particularly in respect of the operating conditions set up by the improved blade arrangements. From extensive experimental observation, it was noted that the improved results were obtained when blade thickness, angle and extension were within the ranges beforementioned. However, the possibility is recognized that the improved operation may result from improved operating conditions of a relatively intangible or indeterminable nature which are achieved under the conditions herein specified. Accordingly, equivalent arrangements, which may be found to achieve the improved operating characteristics or conditions should be considered to be within the scope of the appended claims, notwithstanding minor departures from the literal terms thereof.

We claim:

1. In a trailing blade coater for applying a coating layer directly to a moving web and of the type comprising a rotatable backing roll about which a web is passed, a reservoir placed against the backing roll and having walls cooperating with a web passing over said roll for holding a supply of coating material, a blade having a working edge engaging a web passing over said backing roll and forming, at least in part, the bottom wall of said reservoir, and a holder engaging said blade at a point removed from the working edge thereof and holding the engaged portion of said blade in a plane of support, the improvement characterized by said blade being formed of spring steel and having a thickness of not substantially less than 0.010 inch nor substantially more than 0.030 inch, said holder supporting said blade not substantially less than ⅜ of an inch nor substantially more than 1¾ inches from the working edge thereof, and said holder supporting said blade in a plane of support disposed at an angle of not substantially less than 40° nor substantially more than 50° from the plane tangent to said backing roll along the line of intersection of said plane of support and said backing roll.

2. The coater of claim 1, in which said holder, blade and backing roll are so arranged that the working edge of said blade has a wear angle of in the order of 33°.

3. The coater of claim 1, which includes recirculating means associated with said reservoir, said recirculating means including filter means and a pump adapted to circulate coating material through said filter at a rate at least equal to the rate at which coating material is applied to the web as a coating.

4. The coater of claim 1, in which said reservoir has bottom and back walls disposed at an angle, and a transition wall connects said bottom and back walls, said transition wall being of arcuate form and having a large radius of curvature.

5. In a trailing blade coater for applying a coating layer directly to a moving web and of the type comprising a rotatable backing roll about which a web is passed, a reservoir placed against said backing roll and having walls cooperating with a web passing over said roll for holding a supply of coating material, a blade having a working edge engaging a web passing over said backing roll and forming, at least in part, the bottom wall of said reservoir, and a holder engaging said blade at a point removed from the working edge thereof, the improvement characterized by said holder, blade and backing roll being so arranged that the working edge of said blade has a wear angle in the order of 33°.

6. The coater of claim 5, in which said blade is formed of spring steel and has a thickness of not substantially less than 0.010 inch nor substantially more than 0.030 inch.

7. The coater of claim 6, in which said holder supports said blade not substantially less than ⅜ of an inch nor substantially more than 1¾ inches from the working edge thereof.

8. The coater of claim 6, in which said holder supports said blade in a plane of support disposed at an angle of not substantially less than 40° nor substantially more than 50° from the plane tangent to said backing roll along the line of intersection of said plane of support and said backing roll.

9. The coater of claim 5, in which said holder supports said blade in a plane of support disposed at an angle of not substantially less than 40° nor substantially more than 50° from the plane tangent to said backing roll along the line of intersection of said plane of support and said backing roll.

10. The coater of claim 5, in which said holder supports said blade not substantially less than ⅜ of an inch or substantially more than 1¾ inches from the working edge thereof.

11. The coater of claim 10, in which said holder supports said blade in a plane of support disposed at an angle of not substantially less than 40° nor substantially more than 50° from the plane tangent to said backing roll along the line of intersection of said plane of support and said backing roll.

12. The coater of claim 5, in which said reservoir includes bottom and back walls disposed at an angle and connected by a curved transition wall, said back wall lying at an angle of not less than nor substantially greater than 90° to a radius line extending from the axis of said backing roll to the point of merger of said transition wall with said back wall.

13. The coater of claim 5, which includes means as-

sociated with said reservoir for recirculating coating material, said recirculating means including a filter and liquid outlet means opening at the ends of said reservoir for withdrawing and filtering liquid from the ends of the reservoir.

14. The coater of claim 5, in which the spacing between the walls of the reservoir and the backing roll is less at any level than at any higher level.

15. In a trailing blade coater of the type comprising means for applying coating material to a web surface, movable backing means over which said web is passed, a blade having a working edge pressed against the web for metering the coating material, and a holder for said blade, the improvement characterized by said blade, holder and backing means being so arranged that the working edge of the blade has a wear angle in the order of 33°.

16. The coater of claim 15, in which said blade is formed of spring steel and has a thickness of not substantially less than 0.010 inch nor substantially more than 0.030 inch.

17. The coater of claim 15, in which said holder supports said blade not substantially less than ⅜ of an inch nor substantially more than 1¾ inches from the working edge thereof.

References Cited in the file of this patent

UNITED STATES PATENTS

980,454	Thomson	Jan. 3, 1911
1,993,055	Gerstenberg	Mar. 5, 1935
2,273,021	Cox	Feb. 17, 1942
2,328,183	Barrett	Aug. 31, 1943
2,368,176	Trist	Jan. 30, 1945
2,399,688	Metzner et al.	May 7, 1946
2,477,339	Ljungquist	July 26, 1949
2,649,758	Cowgill	Aug. 25, 1953
2,791,516	Chambers et al.	May 7, 1957