March 29, 1927. 1,622,947

T. F. HARTY

BOILER STRUCTURE

Filed Oct. 24, 1924

Fig. 1.

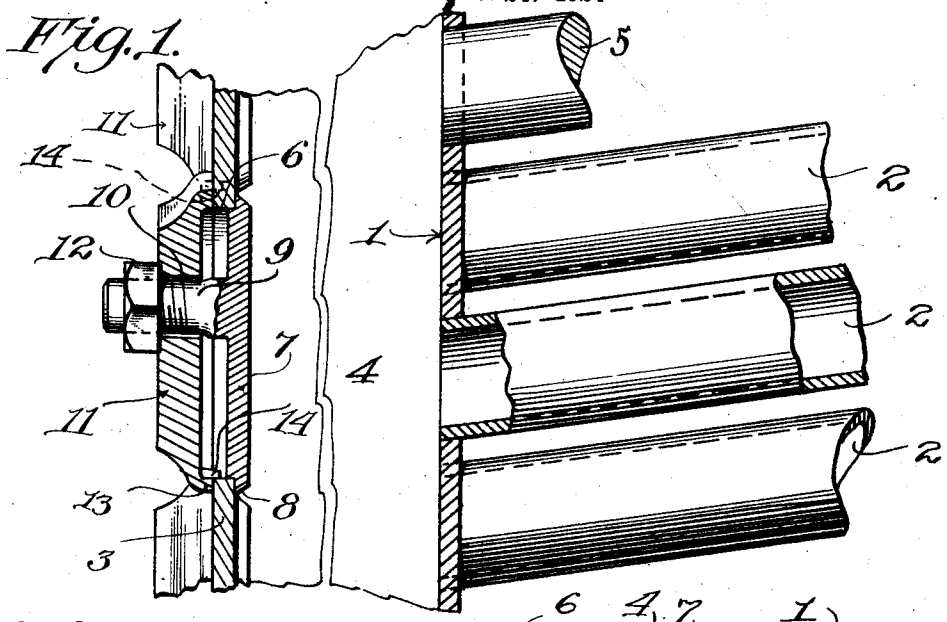

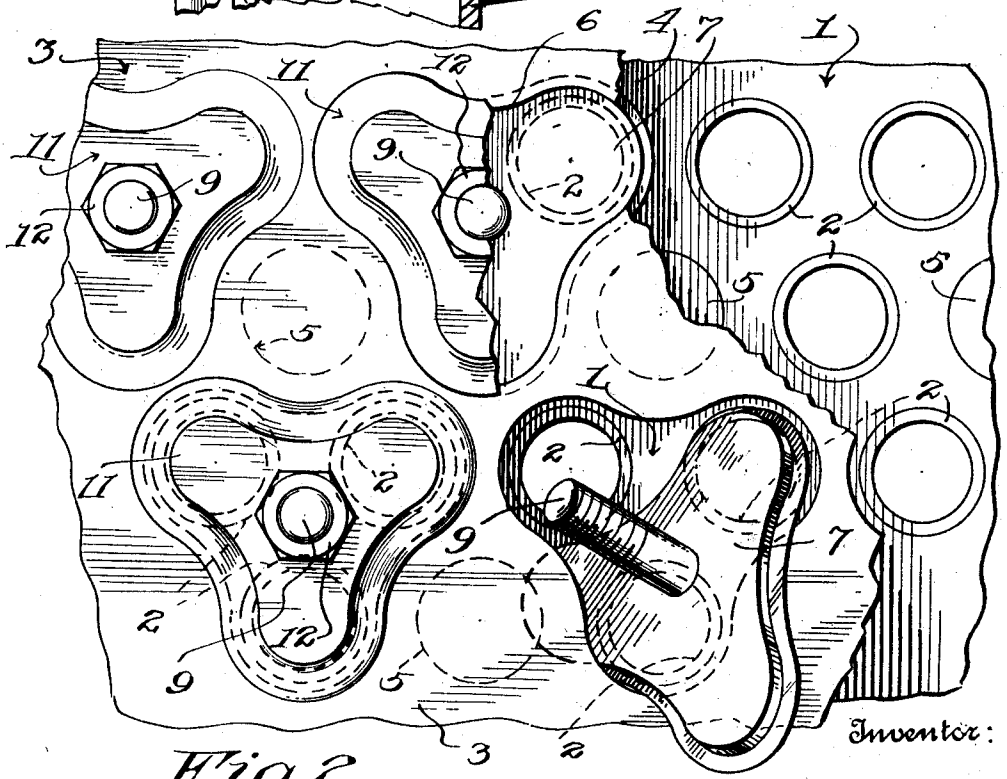

Fig. 2.

Inventor:

Thomas F. Harty,

By

A. C. Hines, Attorney.

Patented Mar. 29, 1927. 1,622,947

UNITED STATES PATENT OFFICE.

THOMAS F. HARTY, OF ROSEBANK, NEW YORK.

BOILER STRUCTURE.

Application filed October 24, 1924. Serial No. 745,629.

This invention relates to boiler structures, particularly marine boilers and other boilers of the water-tube type, and to improvements in the arrangement of the boiler tubes and construction of the outer or false sheets provided with hand-holes in connection with which the hand-hole covers are used.

In water tube boilers of certain types, and particularly those designed for marine service, it is the general practice to provide the outer or false sheet with a hand-hole in line with the end of each water tube in the adjacent tube sheet, so as to permit access to the tube for cleaning, repairs or replacement whenever required, the hand-hole being closed in service by a removable cover. In large marine boilers there are often several thousand of these tubes mounted in a tube sheet, with a corresponding number of hand-holes, each closed by an individual cover, in the false sheet, and it is necessary to apply these covers from the inside of the false sheet in order to secure a leak-proof closure of the hand-hole. The hand-holes being too small for the insertion of the covers through the same, special openings for the insertion and removal of the hand-hole covers are generally provided in the false sheet above and below the line of the tubes, the covers being fastened to strings and raised and lowered thereby, to bring them in position for application, a similar expedient being necessary for their removal. After the covers are properly brought into position difficulty is encountered in properly centering them and fastening them in position. As leakage of the boiler tubes frequently occurs, and as the tubes must be flushed and cleansed of deposits at more or less frequent intervals, the operation of removing and reapplying the hand-hole covers is a time-consuming and costly operation.

An object of the invention is to provide a construction and arrangement of parts whereby the tubes are arranged in groups, of three tubes to each group, each group of tubes being exposed through a hand-hole of special form and adapted to be closed by a cover of similar form, which is readily and conveniently insertable and removable through its hand-hole, whereby time and labor required in the operations referred to will be reduced to the minimum.

A further object of the invention is to provide a construction and arrangement of the described parts whereby the groups of tubes and the hand-holes and cover plates, as well as the tie rods connecting the tube sheets, may be disposed to the greatest advantage to reduce time and labor in the construction, assemblage, as well as repairs, replacement or cleanage of the boiler parts.

A still further object of the invention is to provide a construction in which the hand-holes are so related with respect to each other as to admit of one hand of the operator being inserted through one hand-hole to bear upon and hold a cover-plate in position for application to cover another hole while the other hand of the operator is being employed to apply the bridge piece and fastening nut, thereby facilitating and rendering easier the operation of applying a cover-plate and also removing it whenever required.

With these and other objects in view, the invention consists of the features of construction, combination and arrangement of parts, hereinafter fully described and claimed, reference being had to the accompanying drawing, in which:—

Figure 1 is a vertical longitudinal section through a portion of one end of a boiler equipped with my invention, showing one of the hand-holes and its closure.

Figure 2 is a view looking toward the outside of the false sheet, with parts in elevation and other parts broken away to show the construction and arrangement of the tubes and closures, this view also showing in perspective one of the cover plates in the position in which it is disposed for insertion or removal through its hand-hole.

Referring now more particularly to the drawing, 1 designates one of the tube sheets of a boiler, in which are fitted the adjacent ends of the water tubes 2, 2^a and 2^b and $2'$, $2^{a'}$ and $2^{b'}$, arranged in staggered triangular groups, as hereinafter described, and 3 designates an outer or false sheet arranged in spaced relation to the tube sheet to provide the intervening water space or leg 4. 5 des-

ignates the tie rods which connect the tube sheet 1 to the companion tube sheet (not shown) at the opposite end of the boiler.

In carrying my invention into practice, I provide the false sheet 3 with hand-holes 6 each of a form for exposing a plurality of tubes 2. This hand-hole 6 is of trifoliate or substantially triangular form, or of a contour providing three lobes 6^a of partially circular contour, the walls of which are joined by interconnecting convex portions 6^b giving the described conformation to the hand-hole as a whole. The corner portions or lobes of each of these substantially triangular or trifoliate-shaped hand-holes are arranged in alinement with the ends of a group of three tubes, allowing any of them to be inserted or removed through such hand-hole or reached for flushing or other cleansing operations.

A closure 7 is provided for each hand-hole 6, each closure comprising a plate of a form similar to the hand-hole but of somewhat larger superficial dimensions. The plate 7 is designed to fit within the inner portion of the hand-hole and is provided with a marginal flange 8 to bear against the inner surface of the sheet 3 and form a leak-proof joint. If desired, packing of any suitable type may be used in conjunction with the flange 8 for this purpose. The plate 7 has extending from its outer face a stud bolt 9, designed to project to the exterior of the sheet 3 through an opening 10 in a bridge piece 11 and to have applied thereto a securing and clamping nut 12. The bridge piece 11 shown in the present instance comprises a plate adapted to fit upon the outer side of the sheet 3 and close the outer portion of the hand-hole 6. This plate is of the same shape as the hand-hole and plate 7 and, like the plate 7, of somewhat greater superficial dimensions than the hand-hole. It is provided with an inwardly projecting marginal flange 13 to bear against the outer side of the sheet 3 about the hand-hole 6 and at each of its lobes or corner portions is formed or provided with indicator lugs or projections 14 adapted to fit within the corner portions of the opening 6 to properly center the plate 11 in position and, by frictional engagement with the walls of the opening, to hold said bridge piece from any tendency to turn or rotate. Packing may also be used in conjunction with the flange 13, if desired, to seal the joint between the same and the sheet 3 and to further assist in making the closure absolutely leak-proof. While the use of a bridge plate of this type is preferred, the invention is not limited in practice thereto, as any ordinary form of "spider", "crab", or other type of bridge piece in common use may be employed in lieu thereof.

The tubes 2 and their tube holes are not only arranged in triangular groups as shown and specified, but a novel and very desirable staggered arrangement of the triangular groups with relation to each other, and of the tubes and tube holes of which they are formed, is provided, in order that the grouping may be such as to allow the hand-holes to be formed very close together without undesirably weakening the outer sheet and to so place the hand-holes and their cover plates that any cover plate may be applied or removed without interference from any other cover plate or plates, and further in order that the tie-rod receiving holes in the inner sheet 1 may be arranged to give a most efficient bracing action while at the same time permitting the tube and tie-rod receiving holes to be punched in the sheet 1 to the best advantage and without disposing the holes so close together as to weaken the sheet. As shown, the tube and tie-rod receiving holes are formed in horizontal rows, each row forming a working pair, the working pairs of rows being repeated throughout the required area of the surface of the sheet. As regards each working pair of rows, one row of each pair consists of tube receiving holes only, spaced equidistantly apart from center to center, while the other and coacting row of each pair consists of tube receiving holes and tie-rod receiving holes alternating with each other and also spaced equidistantly apart from center to center and staggered with relation to the holes in the first-named row. Each triangular group of tube receiving holes as formed by these rows consists of two adjacent holes in the first-named row and a single hole in the other row which lies in a vertical plane between the vertical planes of the pair of tubes mentioned. By this construction and arrangement of the tube holes and tie-rod openings in the sheets, the sheets may be punched to the best advantage, without unduly weakening them, and the tie-rods 5 may be connected with the tube sheets on lines between adjacent groups of tubes, in which positions such rods are adapted to perform their proper bracing function without interfering with any service operations which may have to be performed.

The shape of each hand-hole 6 and its cover plate 7 is such that by grasping the stud bolt 9 as a handle and disposing the plate 7 edgewise at an angle across the portion of greatest width or diameter of the hand-hole, as shown for example in Figure 2, the plate 7 may be readily and conveniently manipulated and passed through the hand-hole in either direction for application and removal and while it is being securely held against any possibility of dropping inside the water space or leg 4. Owing to this ease of application or removal of the plate 7, and as a result of but a single hand-hole and

single cover plate for a group of three tubes, the number of cover plates required to be applied and removed on any repair job or whenever flushing or other cleansing of the tubes is required is reduced to the minimum, with a material saving of time, labor and expense. In addition, much greater convenience is afforded through the ready accessibility to the tubes thus gained, allowing all necessary work to be performed with a further saving of time, labor and expense. It will be evident from the foregoing that the hand-holes 6 are in practice of comparatively large size and the hand-holes of the same and adjacent rows are arranged in close relationship. This allows the operator to insert his hand through one hand-hole to bear upon a cover-plate being applied to an adjacent hand-hole, so that said cover-plate may be held in position by one hand of the operator from displacement while the other hand of the operator is being employed to apply the bridge piece and clamp nut, great convenience being thus afforded in applying the cover plates in a ready and expeditious manner and without liability of the plates becoming displaced and falling into the water space or leg 4. This convenience is also afforded in removing the cover-plates for exposure of the tubes, as will be readily understood.

Having thus fully described my invention, I claim:—

1. In a boiler structure, the combination of an inner tube sheet having tube receiving openings and tubes fitted therein, said openings being arranged in horizontal rows and in groups of three openings to each group disposed in triangular formation, each triangular group comprising two adjacent openings of a horizontal row and a single opening of a next adjacent horizontal row, said single opening being arranged in a vertical plane lying between the companion pair of openings of the same group, and the group forming openings of each two cooperating horizontal rows of openings being staggered with relation to the group forming openings of similar adjacent rows of openings overlying or underlying the same, an outer sheet having handholes, one for each group of tubes in the inner sheet, and arranged in alinement therewith, each hand-hole being of trifoliate-form and having the outer walls of its lobes curved on arcs concentric with the center of the hand-hole, and coincident with the said common center of the alined group of tubes, said walls of the lobes substantially conforming to the curvature of the halves of the walls of the tubes most remote from their common center and lying in alinement therewith and at intervening points extending inwardly on lines coincident with the spaces between adjacent relatively inner sides of the tubes. a cover plate for each hand-hole of a trifoliate form corresponding thereto, and means for fastening said cover plate in position.

2. In a boiler structure, the combination of an inner tube sheet having tube receiving openings and tubes fitted therein, said openings being arranged in horizontal rows and in groups of three openings to each group disposed in triangular formation and equidistantly from a common center and each group consisting of two openings of one horizontal row and a single opening of an adjacent horizontal row, the group forming openings of each two cooperating horizontal rows of openings being staggered with relation to the group forming openings of similar adjacent rows of openings overlying or underlying the same, and the said inner sheet being provided with tie-rod receiving openings arranged between and in alternation with the tube receiving openings in the second-named row of each pair of horizontal group-forming rows, an outer sheet having hand-holes, one for each group of tubes, and arranged in alinement therewith, each hand-hole being of trifoliate form and having the outer walls of its lobes curved on arcs concentric with the center of the hand-hole and the said common center of the alined group of tubes, said walls of the lobes substantially conforming to the curvature of the halves of the walls of the tubes most remote from their common center and lying in alinement therewith and at intervening points being concavely curved inwardly and lying on lines coincident with the spaces between adjacent relatively inner sides of the tubes and away from the adjacent side of a tie-bolt hole lying between said group and an adjacent group, a cover-plate for each hand-hole of a trifoliate form corresponding thereto, and means for fastening said cover-plate in position.

3. In a boiler structure, the combination of an inner tube sheet having tube receiving openings and tubes fitted therein, said openings being arranged in horizontal rows and in groups of three openings to each group disposed in triangular formation, each triangular group comprising two adjacent openings of a horizontal row and a single opening of a next adjacent horizontal row, said single opening being arranged in a vertical plane lying between the companion pair of openings of the same group, and said sheet being provided with tie rod receiving openings arranged in pairs, one on each side of each single opening of a group and between the same and the single openings of adjacent groups on opposite sides thereof, an outer sheet having hand-holes, one for each group of tubes in the inner sheet, and arranged in alinement therewith, each hand-hole being of trifoliate-form and having

the outer walls of its lobes curved on arcs concentric with the center of the hand-hole and coincident with the said common center of the alined group of tubes, said walls of the lobes substantially conforming to the curvature of the halves of the walls of the tubes most remote from their common center and lying in alinement therewith and at intervening points extending inwardly on lines coincident with the spaces between adjacent relatively inner sides of the tubes, a cover plate for each hand-hole of a trifoliate form corresponding thereto, and means for fastening said cover plate in position.

In testimony whereof I affix my signature.

THOMAS F. HARTY.