July 17, 1962 J. W. OEHRLI 3,044,506

LUBRICATING SYSTEM FOR CHAIN SAWS

Filed May 2, 1960

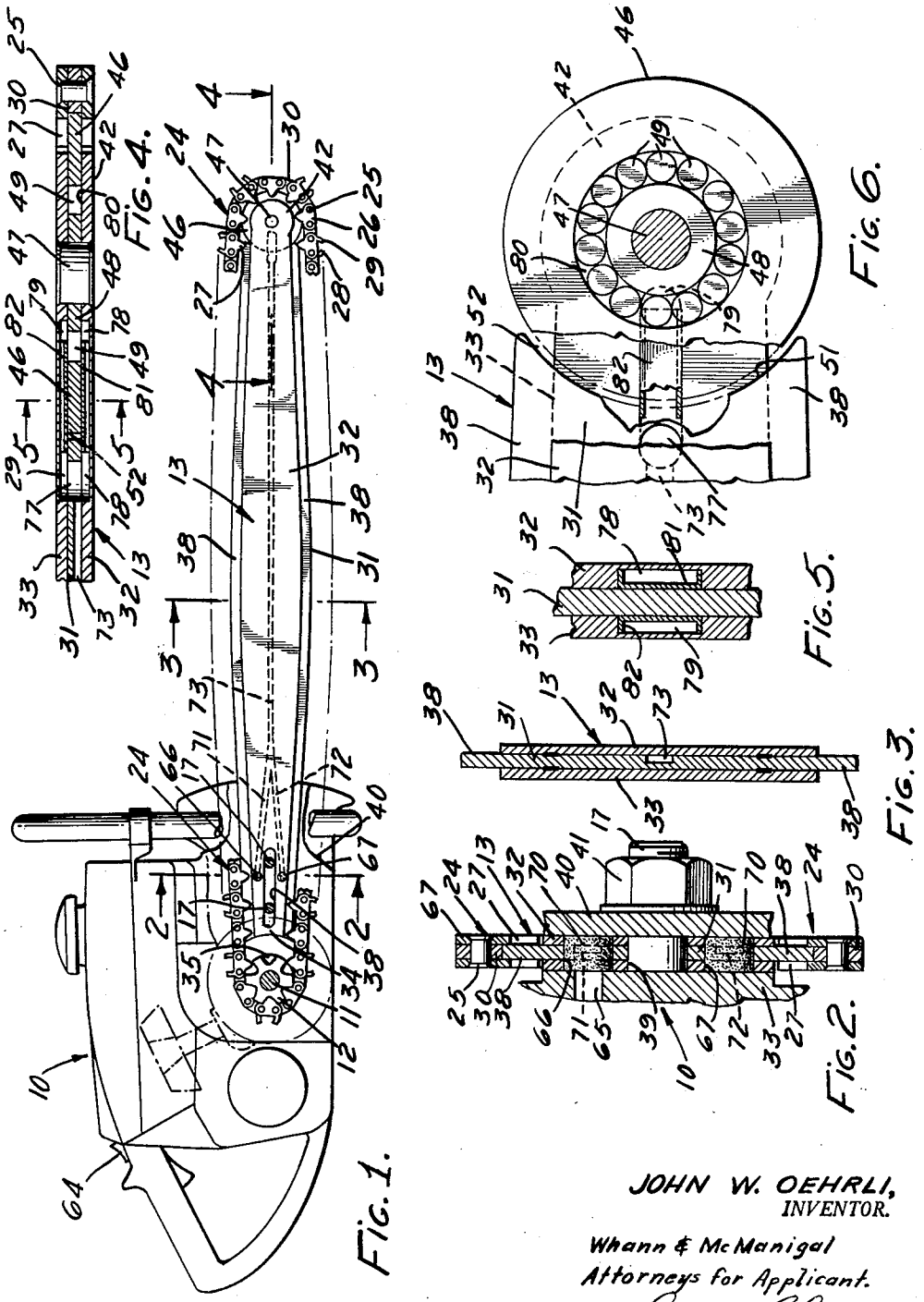

JOHN W. OEHRLI,
INVENTOR.

Whann & McManigal
Attorneys for Applicant.

By Sheldon Whann

United States Patent Office

3,044,506

Patented July 17, 1962

1

3,044,506

LUBRICATING SYSTEM FOR CHAIN SAWS

John W. Oehrli, Pacific Palisades, Calif., assignor to McCulloch Corporation, Los Angeles, Calif., a corporation of Wisconsin

Filed May 2, 1960, Ser. No. 25,931
3 Claims. (Cl. 143—32)

This invention relates to lubrication of chain saws and more particularly it relates to a chain saw having incorporated therein a system for directly lubricating the part of the chain saw carrying the cutters which are about to be moved into the cutting position on the underside of the saw blade.

It is an object of the present invention to provide means in the saw blade to supply lubricating oil to that part of the chain at which the oil provides the maximum benefit to prevent wear both on the saw blade and the saw chain.

It is still another object of the invention to provide a saw blade having a lubricating oil flow passage therein connectible at its inner end to a driving engine and extending longitudinally outwardly to supply oil to an outer end portion of the saw chain and to a wheel on the outer end of the blade on which the chain travels. It has been found in the practice of the invention that supplying oil directly to the wheel bearings and to the wheel on the outer end of the blade, and at the same time, to the chain as it flexes and passes over the wheel, just prior to its moving into its cutting position, has lengthened the life of saw blades four times over that of blades which were not directly lubricated at their outer ends.

Another feature of the invention is that in supplying the oil directly to the bearings any foreign material which tends to work down the sides of the wheel between the plates supporting it is flushed outwardly by centrifugal force created by the rotation of the wheel.

Another object of the invention is to lubricate the moving chain while the joints are flexed on the wheel so that when the chain is straightened on the blade oil is carried to any previously unlubricated portions.

It is a further object of the invention to provide a lubricating oil passage extending longitudinally from one end of the saw blade to the other and having two vertically spaced oil inlet ports at the inner end of the blade so that the blade can be reversed on the saw engine by rotating it 180° about its longitudinal axis to prevent uneven wear of the blade. That is, all saw blades tend to wear on their underside toward the outer end where the chain passes over it during its cutting operation and thus, by providing means for reversing the blade, the blade life can be approximately doubled.

It is a still further object of the invention to provide a laminated saw blade in which a lubricating oil passage can be economically formed therein during manufacture and in which the blade is not required to be made thicker because of the lubricating oil passage. Lubricating oil passages can also be formed in one piece saw blades, but these are more expensive to manufacture than a laminated blade having an equivalent oil passage.

Further objects and advantages of the invention may be brought out in the following part of the specification wherein the purpose of the explanation of details is to make a complete disclosure without, however, limiting the scope of the invention which is set forth in the appended claims.

Referring to the accompanying drawings which are for illustrative purposes only:

FIG. 1 is a side elevational view of a power-driven chain saw employing the invention;

FIG. 2 is an enlarged fragmentary transverse section taken as indicated by the line 2—2 of FIG. 1;

2

FIG. 3 is a fragmentary transverse sectional view taken as indicated by the line 3—3 of FIG. 1;

FIG. 4 is an enlarged fragmentary longitudinal sectional view taken as indicated by the line 4—4 of FIG. 1;

FIG. 5 is a sectional view, illustrating the laterally spaced lubricating oil flow passages which bridge the gap between the central plate of the saw blade and the wheel, taken as indicated by the line 5—5 of FIG. 4; and

FIG. 6 is a fragmentary side elevational view of the outer end of the saw blade and the bearing mounted wheel.

Referring again to the drawings, there is illustrated in FIG. 1 a power-driven chain saw comprised generally of a power unit **10** having an engine therein for supplying power to rotate a drive shaft **11** on which is operably mounted a chain drive sprocket **12**. A saw blade **13** is secured to a flat mounting surface on the power unit **10** forwardly of and in longitudinal alignment with a plane through the center of the sprocket and at right angles to its shaft by means of bolts **17**.

The endless chain **24** is comprised of alternate side and center links **26** and **30**, respectively, connected by pintles **25**. Selected side links have outwardly directed depth gauges **28** and cutting elements **29**, not shown in detail. Each of the side links **26**, positioned on opposite sides of the chain, has inwardly directed projections **27** so as to form pairs of opposite laterally spaced teeth adapted to travel on the blade **13** and on the engine-driving sprocket **12**. The sprocket **12** is formed from two identical laterally aligned sprocket wheels spaced by a disc **35**, the oppositely positioned projections being held in alignment on opposite sides of the disc and being of the proper size to fit between the teeth of the sprocket so that its rotation drives the chain.

For illustrative purposes, a laminated saw blade **13** is shown formed by three elongated flat plates, namely, a center plate **31** secured to outer identical righthand and lefthand plates **32** and **33** by welds, as shown in FIG. 3, or by other suitable means. The outer plates are substantially coextensive longitudinally with the central plate at inner end **34** of the blade and transversely, or in the vertical direction in the drawings, the central plate **31** extends outwardly above and below the outer plates to form a tongue or chain track **38**, the outer edges of which are in longitudinal alignment with the sprocket disc **35**. Adjacent the inner end **34** of the blade is a longitudinal adjusting mounting slot **39** laterally through the blade and through which bolts **17** extend, the blade being movable longitudinally on the bolts for adjustment purposes. In assembling the blade and the chain on the power unit, the slot **39** is adjusted on the bolts so that the chain is properly positioned on the sprocket and on the blade. As shown in FIG. 2, the inner surface of the blade formed by blade **33** is in contact with a flat mounting surface of the power unit, and on the outer surface of the outer plate **32** is a mounting plate **40**, shown cutaway and in dotted lines in FIG. 1 and shown fragmentarily in FIG. 2. When the chain is properly adjusted as to tightness, nuts **41** are tightened on the bolts **17** so as to fixedly secure the blade on the mounting surface of the power unit **10**.

At the outer end **42** of the blade the outer plates extend longitudinally beyond the central plate to form a mount for a chain guiding wheel **46** having substantially the same lateral thickness of central plate **31** and being in longitudinal and transverse alignment therewith to form a rotatable chain track at the outer end. The wheel **46** is supported by a rivet-axle **47** secured to the two outer plates **32** and **33** and fixed on the axle is a short sleeve or washer-shaped inner bearing race forming portion **48**. Surrounding sleeve **48** and held laterally inwardly by the inner sides of the outer plates are disc-shaped roller bearings **49** which in turn are immediately inwardly of

the inner circumferential surface of the wheel and on which it rotates with minimum friction. As best seen in FIGS. 1 and 6, the central plate **31** has an outer arc-shaped end **51**, concentric with the wheel **46**, but with greater radius so that the wheel and the arc-shaped end **51** are spaced longitudinally to form an arcuate transversely extending gap **52**. The wheel **46** has a diameter greater than the transverse width of the central plate **31** at its outer end, as the latter plate is tapered transversely inwardly to provide clearance for the chain as it moves from the wheel onto the chain track **38** so as to eliminate any possible obstruction to the chain.

The chain generally travels having a substantial portion of its center links **30** on the outer edge of the track **38** and on the circumferential edge of the wheel **46** so that the inner ends of the projections **27** do not contact the outer plates **32** and **33**. The movement of the chain thus causes the wheel to rotate and there is very little wear between the wheel and the chain from the movement of the one on the other. This arrangement provides the advantages of nonprecision manufacture of both the chain and the blade relative to length of the projections **27** and the transverse width of the track; that is, the basic tolerance limitation is only that the projections must be shorter than the transverse width of the track or vice versa.

The projections **27** engage the sprocket teeth and hold the chain on the track laterally. Thus, in operation, the sprocket rotates in the clockwise direction to move the chain outwardly from the engine over the top of the blade, over the wheel causing it to rotate, and the chain returns toward the engine in its cutting position on the underside of the blade.

A lubricating oil system, not shown, is provided in the power unit **10** to supply oil from the engine to the blade and chain. This system may be an automatic continuously operating one or it may be an intermittently operated automatic system or it may be a hand operated plunger pump system, the latter two of which may be actuated, for example, by a thumb-operated knob or plunger **64**, shown in FIG. 1. To carry lubricating oil from the engine, a duct **65** is provided to be in communication with the oil passage means formed within the blade. As may be seen in FIGS. 1 and 2, at the inner end **34** of the blade are two transversely or vertically spaced holes **66** and **67**, extending laterally through the blade and each having a sintered metal filter-forming plug **70** therein. The sintered plug filters **70** are provided to prevent any foreign matter, such as sawdust, from entering the chain oiling system.

The upper hole **66** is positioned on the engine to receive the lubricating oil supply from the duct **65** and the lower hole **67** is sealed by the engine mounting surface on one side and by the mounting plate **40** on the other. As the blade is used in one position on the engine, it tends to wear unevenly, especially at its outer end, and it is thus desirable to reverse it on the engine, as may be visualized in viewing FIG. 2, so that the outer surface of plate **32** is in abutment with the engine-mounting surface and so that the outer surface of plate **33** is in abutment with the mounting plate **40**. When the blade is so reversed, the hole **67** is in alignment with the supply duct **65** and the hole **66** is sealed by the engine-mounting surface on one side and the mounting plate on the other.

Extending longitudinally outwardly through the central plate **31** from holes **66** and **67** are two converging passages **71** and **72**, respectively, which join each other and a main longitudinal oil conduit or passage **73**, conveniently formed by a channel-shaped groove in plate **31** and the inner seal-providing surface of plate **32**.

As shown in FIGS. 1, 4 and 6, passage **73** extends longitudinally outwardly to a point inwardly of the outer end of plate **31** and inwardly of gap **52**, and terminates in a lateral bore **77** extending through the central plate. In

communication with bore **77**, laterally outwardly therefrom are longitudinally directed ducts **78** and **79**, best seen in FIGS. 4, 5 and 6, which extend longitudinally outwardly so as to be in communication with the bearing race **80** formed between the race sleeve **48** and the inner circumferential surface of the wheel **46**. Ducts **78** and **79** may be formed by conveniently cutting laterally inwardly facing channel-shaped grooves in the inner walls of the outer plates **32** and **33** and by inserting into the grooves laterally outwardly facing channel strips **81** and **82**, respectively, to provide sealed passages to bridge the gap **52** and to carry the oil through the outer end openings of ducts **78** and **79** to the bearing race, the bearings, the opposite sides of the wheel and to the chain. While the form shown illustrates a bifurcated passage means consisting of ducts **78** and **79**, a single passage, such as **78**, would be feasible to supply a sufficient amount of oil through the bearing race to both sides of the wheel and to the chain. The two channel members **81** and **82** are spaced laterally outwardly of the wheel a slight amount, as are the outer plates **32** and **33**, so as to not interfere with its rotation and so as to permit the easy flow of oil from the bearing race upwardly and downwardly on the surface of the wheel and onto the chain.

When the lubricating oil system in the engine is operating, it forces oil through duct **65** into the sintered filter **70** and the passage **71** and then into the main passage **73**. From the end of passage **73** at bore **77**, the oil flows laterally to both sides into the ducts **78** and **79** and then into both sides of the bearing race **80** so as to lubricate the bearings. Because the wheel is rotating, the oil is carried outwardly on it, and on the outer plates **32** and **33**, by centrifugal force to the chain links wherever they contact the wheel as they travel from the top to the underside of the blade into their cutting position.

It is clear that the present invention of a chain saw having a lubricating oil system which supplies oil directly to that portion of the saw chain which is about to be engaged in the cutting action may take various forms in various chain saw blade constructions without departing from the principles disclosed herein.

I claim:

1. For use in a chain saw blade on which a saw chain is carried and guided as it is driven by an engine having lubricating oil supply means, said blade comprising a central elongated flat plate having on each of its two flat opposite sides an outer flat plate, said blade having an inner end portion securable to a saw driving engine and having an opposite end portion to extend longitudinally outwardly from said engine, said central plate having opposite transverse portions extending transversely outwardly of said outer plates at both transverse edges to form a chain track, said outer plates extending longitudinally outwardly from said central plate at said opposite end; a flat-sided rotatable wheel of substantially the same thickness as said central plate mounted longitudinally outwardly of said central plate on bearings and supported on an axle fitted in said outer plates adjacent said opposite end of said blade; a gap extending transversely between said wheel and said opposite end of said central plate, said chain being adapted to be carried and guided on said chain track on said central plate and on said wheel outwardly of said central plates; a lubricating system comprising lubricating passage means extending longitudinally within said blade, said passage means being adapted to be connected with lubricating oil supply means in said engine at said inner end portion to supply lubricating oil to said bearings and said chain extending around said wheel, said passage means comprising a conduit extending longitudinally in said central plate, said passage means being laterally bifurcated adjacent the opposite end portion of said central plate to extend into an outer duct in each of said outer plates, said ducts bridging said gap and having open outer ends adjacent said bearings outwardly of said central plate; and the inner

end of said passage means being bifurcated transversely to join two transversely spaced inlets, said inlets extending laterally through said blade, each of said inlets having a filter therein extending from the outer side of one outer plate to the outer side of the other outer plate.

2. For use in a chain saw blade on which a saw chain is carried and guided as it is driven by an engine having lubricating oil supply means, said blade comprising a central elongated flat plate having on each of its two flat opposite sides an outer flat plate, said blade having an inner end portion securable to a saw driving engine and having an opposite end portion to extend longitudinally outwardly from said engine, said outer plates extending longitudinally outwardly from said central plate at said opposite end; a flat-sided rotatable wheel mounted on bearings and supported on an axle between said plates longitudinally outwardly of said central plate and adjacent said opposite end, said bearings being in the form of roller discs fitted between said two outer plates and positioned radially inwardly of said wheel and radially outwardly of said axle; a gap extending transversely between said wheel and said opposite end of said central plate, said chain being adapted to be carried and guided on said blade and on said wheel; a lubricating system comprising lubricating passage means extending longitudinally within said blade, said passage means being adapted to be connected with lubricating oil supply means in said engine at said inner end portion and to supply lubricating oil to said bearings and said chain extending around said wheel, said passage means comprising a groove extending longitudinally in said central plate and being laterally bifurcated adjacent the opposite end portion of said central plate to extend into a duct portion in each of said outer plates, said duct portions bridging said gap and having open outer ends adjacent said bearings outwardly of said central plate, said duct portions being formed by a laterally inwardly directed channel-shaped groove in said outer plates and a laterally outwardly directed channel member fitted in each of said inwardly directed channels; and the inner end of said passage means being bifurcated transversely to join two transversely spaced inlets, said inlets extending laterally through said three plates.

3. For use in a chain saw blade on which a saw chain is carried and guided as it is driven by an engine having lubricating oil supply means, said blade having an inner end securable to a saw driving engine and having an opposite end to extend longitudinally outwardly from said engine, said blade having a rotatable wheel mounted on bearings and supported on an axle carried on said blade adjacent its opposite end, said bearings being laterally enclosed by opposite end blade portions and positioned radially inwardly of said wheel and radially outwardly of said axle, said wheel being longitudinally spaced from a portion of said opposite end to permit rotation, said chain being adapted to be carried and guided on said blade and on said wheel, a lubricating system comprising: a lubricating oil passage extending longitudinally within said blade, said passage being adapted to be connected with lubricating oil supply means in said engine at said inner end and to supply lubricating oil to said bearings and said chain extending around said wheel, said passage being laterally bifurcated adjacent said opposite end of said blade to extend into parallel laterally spaced ducts in said blade laterally outwardly of said wheel, said ducts bridging said space and having open outer ends in communication with said bearings and said wheel longitudinally outwardly of said space; and the inner end of said passage means being bifurcated transversely to join two transversely spaced inlets, said inlets extending laterally through said blade so that said blade is reversible on said chain saw engine.

References Cited in the file of this patent

UNITED STATES PATENTS

2,391,730	Melvin et al.	Dec. 25, 1945
2,747,945	Fulton	May 29, 1956
2,748,810	Strunk	June 5, 1956
2,896,746	Gudmundsen	July 28, 1959
3,010,538	Strunk	Nov. 28, 1961

FOREIGN PATENTS

1,047,905	France	July 29, 1953