W. E. CARSTENSEN.

SAFETY DEVICE FOR AUTOMOBILES.

APPLICATION FILED JULY 9, 1917.

**1,266,551.**

Patented May 21, 1918.

2 SHEETS—SHEET 1.

Fig. 1.

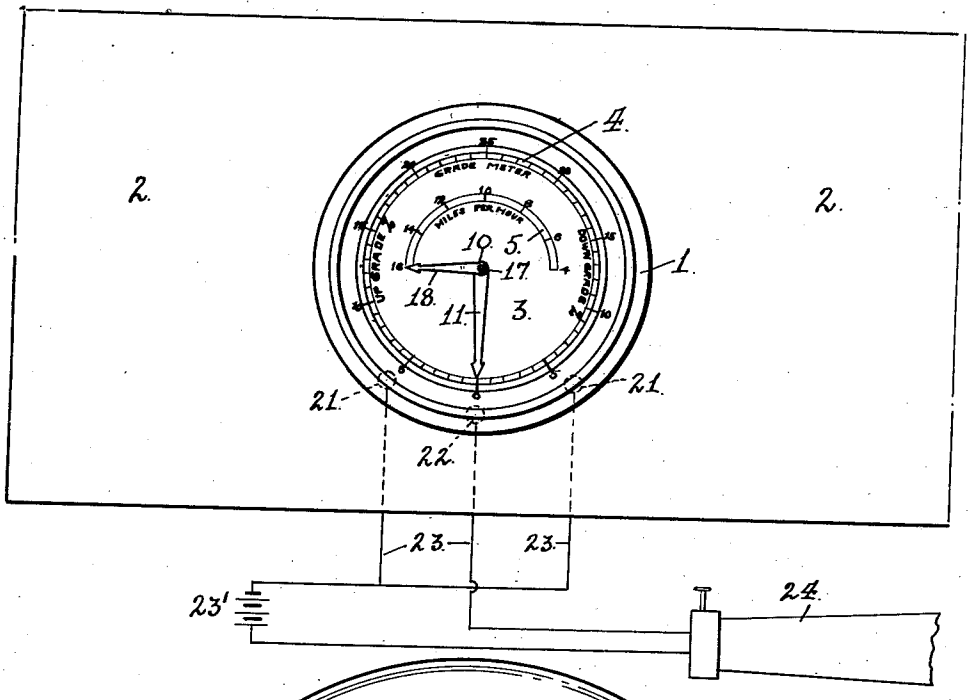


Fig. 2.

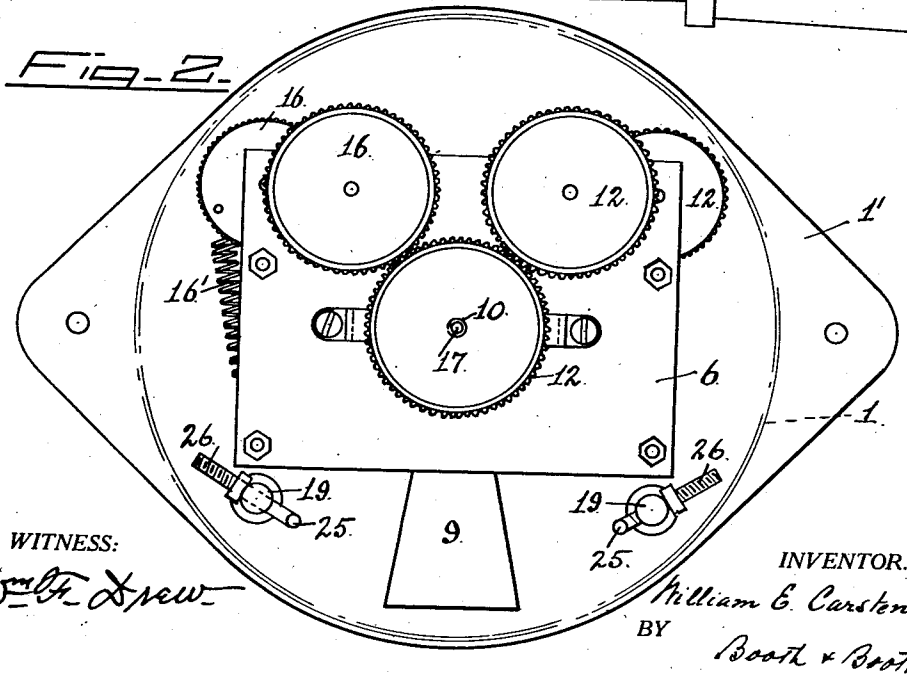


WITNESS:

Wm. H. Drew

INVENTOR.

William E. Carstensen

BY

Booth & Booth

ATTORNEYS.

W. E. CARSTENSEN.

SAFETY DEVICE FOR AUTOMOBILES.

APPLICATION FILED JULY 9, 1917.

**1,266,551.**

Patented May 21, 1918.

2 SHEETS—SHEET 2.

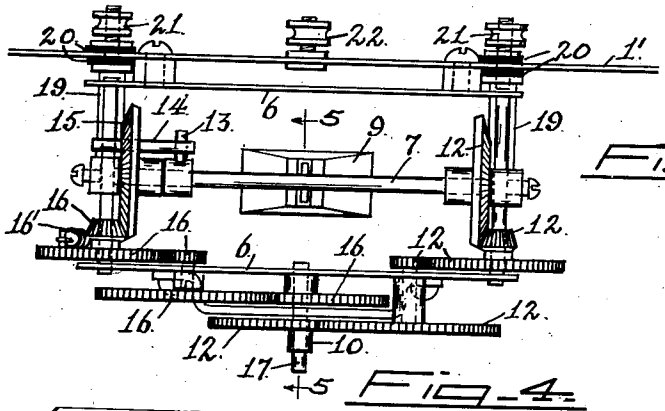


Fig. 3.

Fig. 4.

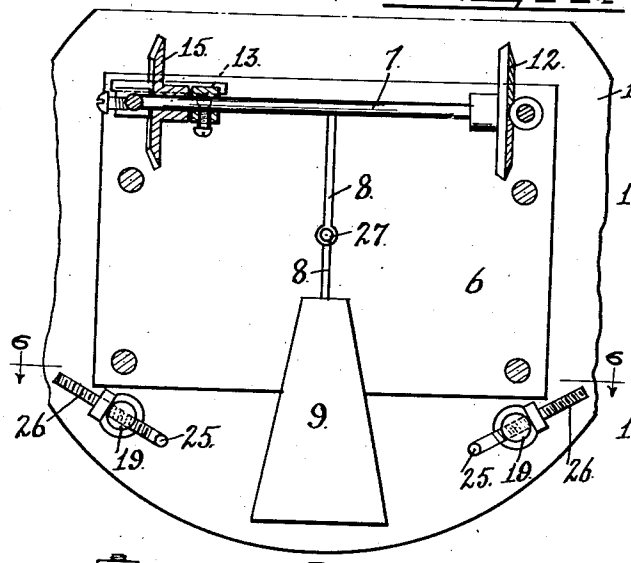


Fig. 5.

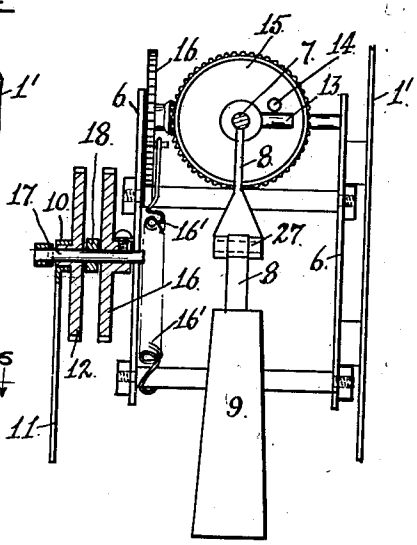


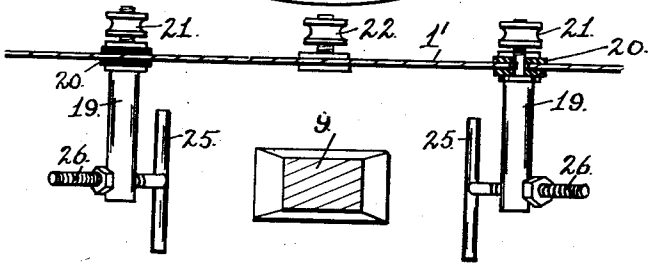


Fig. 6.

WITNESS:

Wm. F. Drew

INVENTOR.

William E. Carstensen

BY

Booth & Booth.

ATTORNEYS.

# UNITED STATES PATENT OFFICE.

WILLIAM E. CARSTENSEN, OF QUARRIES, CALIFORNIA.

## SAFETY DEVICE FOR AUTOMOBILES.

1,266,551. Specification of Letters Patent. Patented May 21, 1918.

Application filed July 9, 1917. Serial No. 179,391.

*To all whom it may concern:*

Be it known that I, WILLIAM E. CARSTENSEN, a citizen of the United States, residing at Quarries, in the county of Sonoma and State of California, have invented certain new and useful Improvements in Safety-Devices for Automobiles, of which the following is a specification.

My invention relates in general to devices designed for the promotion of safety in the operation of automobiles, and in particular to a device or instrument the functions of which are to indicate the grade and, at the same time, the rate of speed at which the indicated grade may be negotiated with safety; to automatically operate the horn when taking a curve at a speed predetermined to exceed the limit of safety for said curve; and to automatically and continuously operate the horn in case the automobile upsets.

These are the objects of my invention, and to these ends my invention consists in the novel safety-device which I shall now fully describe, by reference to the accompanying drawings, in which—

Figure 1 is a front elevation of my safety device.

Fig. 2 is a front view, enlarged, the case with its dial plate being removed.

Fig. 3 is a top plan view of the interior mechanism.

Fig. 4 is an elevation of the same with the front frame plate removed.

Fig. 5 is an end view of the mechanism, in a part section on 5—5 of Fig. 3.

Fig. 6 is a section on 6—6 of Fig. 4.

1 is the case of the instrument, in practice having the circular shape common to dial carrying devices. 1′ in Fig. 2 is the back plate of the case. The instrument is properly mounted on the front board 2 of the automobile, and it carries a face 3, upon which is delineated a grade scale 4, which on one side, say on the left hand, indicates an up grade and on the other or right hand side indicates a down grade, both running from zero at the bottom to, say 25 degrees at the top, as shown in Fig. 1. Upon the face is also delineated a second scale 5 the markings of which indicate rates of speed in miles per hour.

Within the case 1 is a frame 6 comprising suitably connected front and back plates. In the upper portion of this frame, about half way between the front and back plates, and parallel therewith is a rock-shaft 7, from which, by a stem 8, is suspended a pendulum weight 9 adapted to swing with the rock shaft in a direction fore and aft. Between one end of the rock-shaft 7 and the arbor 10 of the grade-hand 11 is a gear train 12, properly proportioned to effect by the rocking of the shaft, under the swing of the pendulum due to the grade, the travel of the hand 11 over the grade scale 4. For an up-grade the hand will move up to the left and for a down grade it will move up to the right, and thus indicate the percentage of either grade.

On the other end of the rock-shaft 7 is a crank pin 13, Figs. 3 and 5, which when said shaft moves in the direction for indicating the down-grade is adapted to come in contact with and thereby to move a crank pin 14 on a gear 15 of a gear train 16 leading to an arbor 17 which carries a speed indicating hand 18 adapted to travel over the speed scale 5. No movement of the speed hand 18 is effected by the movement of the rock-shaft in a direction indicating an up-grade, and, therefore, when such up-grade is encountered, the speed hand remains quiescent. But when a down grade is being traveled, the grade hand 11 moves up to the right over the down grade section of the grade-scale 4, and at the same time the speed-hand 18 moves over the speed scale 5. The gear train 16 and hand 18 return to normal, by means of a spring 16′, shown in Figs. 2, 3 and 5.

Now by properly proportioning these movements of the two hands according to a predetermined ratio, it can be made apparent at what rate of speed a given percentage of down grade may be safely negotiated, and the driver can regulate his speed accordingly.

It is apparent that the same conditions may be made to apply to the up-grade if such be desirable, but I have found that on the up-grade the machine is under sufficient control for various causes to render such provision unnecessary; but by applying such safeguard to the down-grade travel, the element of safety is sufficiently satisfied.

For the further functions of the instrument the following features will now be noted. In the back plate 1′ of the case 1 near the lower portion at each side is mounted a bar 19 which at 20 is electrically insulated from said plate, as seen in Figs. 3 and 6. One end of each of these bars has elec-

trical connection with a binding post 21 on the exterior of the back-plate of the case, and from these binding posts and from a ground on the back-plate 1′ at 22 leads an electric circuit 23 which includes the battery 23′ and the horn 24 of the automobile, as shown in Fig. 1.

Each of the insulated bars 19 carries a contact 25 adjustably mounted thereon by means of the screw stem 26, so that said contacts may be set in or out as predetermined, as seen clearly in Fig. 6.

The stem 8 of the pendulum weight 9 has in its length a hinge joint 27, as shown in Figs. 4 and 5, enabling the weight to swing laterally, with the joint 27 as a center, so that it may come in contact with either electrical contact 25 according to the side toward which it swings. The weight is a metallic one and the electric circuit being grounded on the metallic case of the instrument it follows that said weight 9 and said contacts 25 form the poles of an electric switch which is open when the weight does not touch the contacts 25 and is closed when it does touch them.

Now, when the automobile is rounding a curve, say from right to left centrifugal force will swing the weight 9 about the hinge 27 over to contact with the right hand contact 25, which will complete the electric circuit and will sound the horn; and similarly when rounding a curve from left to right, the weight will swing to the left and by closing the switch on the left side will cause the horn to sound. By properly adjusting the contacts 25 with relation to the swing of the weight such radius of curve as may be deemed unsafe under a given speed, may be predetermined. This signal is, therefore, not only a warning to others of the approach of the machine, but is also a notice to the driver himself that he is exceeding a safe speed on a given curve.

This construction leads, finally, to the following important result. It has happened, not infrequently, that a machine is upset under conditions of place, that the accident is not noticeable to others passing the locality, as for example, down a bank into a deep and possibly wooded gully, and the occupants of the machine so injured as to be incapable of calling for help. If this should occur, the weight 9 will, under all circumstances, lie over in contact with one or the other of the contacts 25, and the horn will sound continuously until heeded by others or until the battery is exhausted; and the warning will, therefore, continue for many hours or even days, thereby insuring assistance.

I claim:—

1. A safety device for automobiles, comprising an indicator for grade-percentage; means for operating said indicator; an indicator for a speed rate, bearing a definite predetermined relation of safety to the grade percentage; and means operated by the grade indicator operating means for simultaneously operating the speed-indicator.

2. A safety device for automobiles comprising a pendulous weight suspended for swinging movement developed by changes of grade; a face plate having a grade scale and a speed-scale bearing a definite predetermined relation of safety to the grade-scale; a hand operated by the swinging movement of the weight, and playing over the grade scale to indicate the grade percentage; and a second hand playing over the speed-scale and operated by the movement of the weight simultaneously with the operation of the first hand.

3. A safety device for automobiles comprising a pendulous weight suspended for swinging movement developed by changes of grade; a rock-shaft from which said weight is suspended; a hand; connections between said rock-shaft and hand to move the latter; a face-plate having a grade scale over which said hand plays and having also a speed-scale indicating a relation of safety to the grade percentage; a second hand playing over the speed-scale; and connections between said rock-shaft and the second hand to move the latter, said last named connections bearing a predetermined proportional movement relation to the first named connections.

4. A safety device for automobiles comprising a pendulous weight suspended for swinging movement developed by changes of grade; a rock-shaft from which said weight is suspended; a hand; connections between said rock-shaft and hand to move the latter; a face-plate having a scale over which the hand plays, said scale indicating opposing up and down grade percentages, said face-plate having also a speed-scale indicating a relation of safety to the grade percentage; a second hand playing over the speed-scale; and connections between said rock-shaft and the second hand to move the latter only when the first hand moves over the down grade portion of its scale, said last named connections bearing a predetermined proportional movement relation to the first named connections.

5. A safety device for automobiles comprising a pendulous weight suspended for swinging movement developed by changes of grade and for a swinging movement under centrifugal force developed by the travel of the machine on a curve; a face-plate having a grade-scale; a hand operated by the first named swinging movement of the weight and playing over the scale to indicate the grade percentage; an electric alarm circuit including said weight as one pole of a switch; and a second pole of said switch

adapted for make and break contact with the weight under the centrifugal movement thereof.

6. A safety device for automobiles comprising a pendulous weight suspended for swinging movement developed by changes of grade and for a swinging movement under centrifugal force developed by the travel of the machine on a curve; a face-plate having a grade-scale and a speed-scale bearing a definite predetermined relation of safety to the grade-scale; a hand operated by the first named swinging movement of the weight and playing over the grade scale to indicate the grade percentage; a second hand playing over the speed-scale and operated by said movement of the weight simultaneously with the operation of the first hand; an electric alarm circuit including said weight as one pole of a switch; and a second pole of said switch adapted for make and break contact with the weight under the centrifugal movement thereof.

7. A safety device for automobiles comprising a pendulous weight suspended by a stem for swinging movement developed by changes of grade, said stem having a hinge joint adapting the weight for a second swinging movement developed by the travel of the machine on a curve; a rock-shaft to which the stem of the weight is secured; a face-plate having a grade-scale and a speed-scale bearing a definite predetermined relation of safety to the grade-scale; a hand operated by the rock-shaft on the first named swinging movement of the weight, said hand playing over the grade-scale; a second hand playing over the speed-scale and operated by the rock-shaft on said movement of the weight; an electric alarm circuit including said weight as one pole of a switch; and a second pole, adjustably mounted, of said switch adapted for make and break contact with the weight under the centrifugal movement thereof.

In testimony whereof I have signed my name to this specification in the presence of two subscribing witnesses.

WILLIAM E. CARSTENSEN.

Witnesses:

WM. F. BOOTH,

D. B. RICHARDS.