(No Model.)

C. H. NORTON.

GRINDING MACHINE.

No. 590,498. Patented Sept. 21, 1897.

Fig. 1.

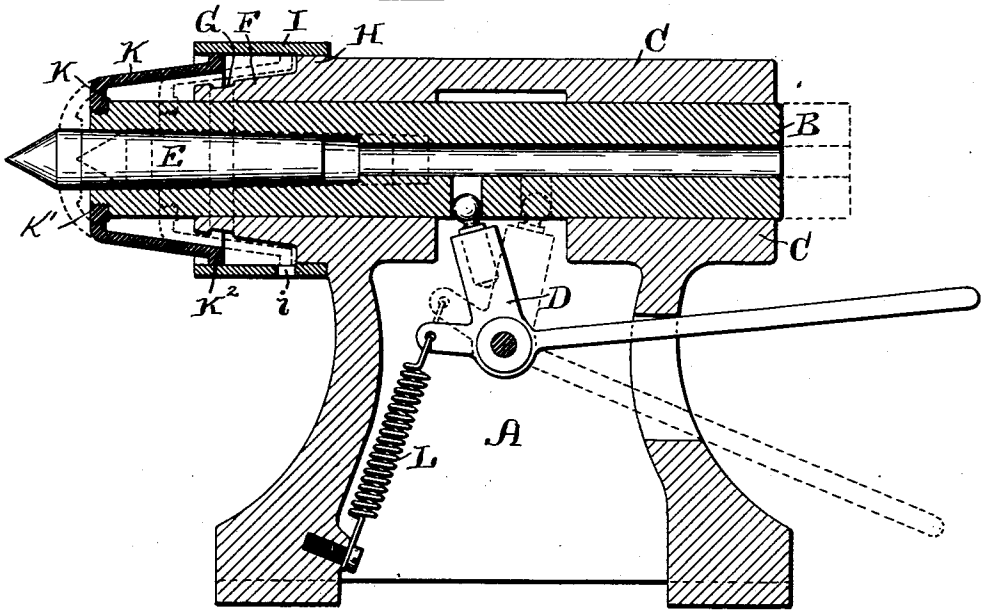

Fig. 2.

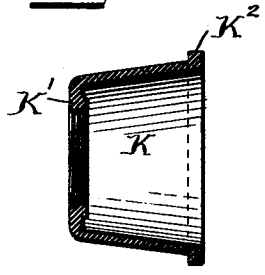

Fig. 3.

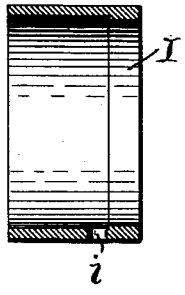

Fig. 4.

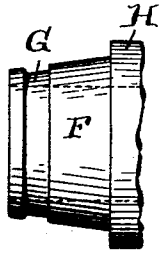

WITNESSES:

M. F. Bligh.

Chas. H. Luther Jr.

INVENTOR:

Charles H. Norton,

by Joseph H. Miller & Co.

Attys

THE NORRIS PETERS CO., PHOTO-LITHO., WASHINGTON, D. C.

UNITED STATES PATENT OFFICE.

CHARLES H. NORTON, OF PROVIDENCE, RHODE ISLAND, ASSIGNOR TO THE BROWN & SHARPE MANUFACTURING COMPANY, OF SAME PLACE.

GRINDING-MACHINE.

SPECIFICATION forming part of Letters Patent No. 590,498, dated September 21, 1897.

Application filed June 2, 1897. Serial No. 639,086. (No model.)

To all whom it may concern:

Be it known that I, CHARLES H. NORTON, of the city of Providence, in the county of Providence and State of Rhode Island, have invented certain new and useful Improvements in Grinding-Machines; and I hereby declare that the following is a full, clear, and exact description of the same, reference being had to the accompanying drawings, forming part of this specification.

This invention has reference to an improvement in the class of machines in which metallic parts are ground to the required form and size. In these machines the particles separated in grinding, usually containing emery, corundum, or other grinding material in fine powder, are liable to enter between the sliding parts of the machine and the bearings in which they are supported and cause them to wear.

The object of this invention is to protect these moving parts and prevent the entrance of the grinding matter. To this end the invention consists in the peculiar and novel construction of a guard secured to the sliding part and a cover secured to or forming part of the fixed part of the machine, as will be more fully set forth hereinafter.

To illustrate the invention, I have elected to show and describe the same in connection with the slide supporting the center of the foot-rest by which one end of the work is supported in the grinding-machine.

Figure 1 is a longitudinal sectional view of a foot-rest of a grinding-machine provided with a reciprocatable center. Fig. 2 is a sectional view of the guard secured to the sliding arbor. Fig. 3 is a sectional view of the sleeve secured to the stationary end of the foot-rest. Fig. 4 is a view of the end of the head in which the arbor is supported.

In the drawings, A designates the standard of the foot-rest; B, the reciprocatable arbor; C, the head in which the arbor is supported; D, a bell-crank lever pivotally supported on the standard A and connected with the arbor B, so that by operating the lever D the arbor may be drawn back; E, the center on which one end of the work is supported. The end F of the head C is formed with a taper and provided with the annular groove G. To the end H of the head C the cylindrical sleeve I, provided with the hole *i* at its lowest part, is secured. The guard K forms a conical cylinder, the inner side of which corresponds to the taper F of the head C, but is of slightly greater diameter than the taper of the head. The guard K is provided with the internally-screw-threaded flange K′, by which it is secured to the end of the arbor B, and with the flange K^2, which fits with a sliding fit into the sleeve I. As indicated in Fig. 1 in broken lines, the guard K may be secured to the center E.

In grinding-machines water is generally employed to facilitate the grinding, and it is difficult to use so close a fit in any reciprocating part of a grinding-machine that water cannot enter. The water carries the finer particles of the grinding material with it into any place it can enter. When work is to be removed or replaced, the lever D draws the arbor B and center E away from the work and into the head C, and when the lever is released the coiled spring L draws the arbor forward and the center against the work. In these motions the guard K slides into the sleeve I, as is indicated in broken lines in Fig. 1, and out again into the position shown in section.

Having thus described my invention, I claim as new and desire to secure by Letters Patent—

1. In a grinding-machine, the combination with a reciprocating part of the machine and the end of the fixed part beyond which the reciprocating part moves, of a tapering surface provided with a groove, a sleeve, overhanging the tapering part and groove, on the fixed part of the machine, and a guard secured to the reciprocating part of the machine and in sliding contact with the sleeve, whereby the surface of the reciprocating part is protected against water and grit, as described.

2. In a grinding-machine, the combination with the arbor B, the center E, and head of a foot-rest, of the sleeve I, and the guard K having a sliding contact with the interior of the sleeve, whereby the projecting end of the arbor is protected and inclosed, as and for the purpose described.

In witness whereof I have hereunto set my hand.

CHARLES H. NORTON.

Witnesses:
M. F. BLIGH,
J. A. MILLER, Jr.