No. 647,535. Patented Apr. 17, 1900.

J. W. SMITH.

WEED CUTTER.

(Application filed July 3, 1899.)

(No Model.) 2 Sheets—Sheet 1.

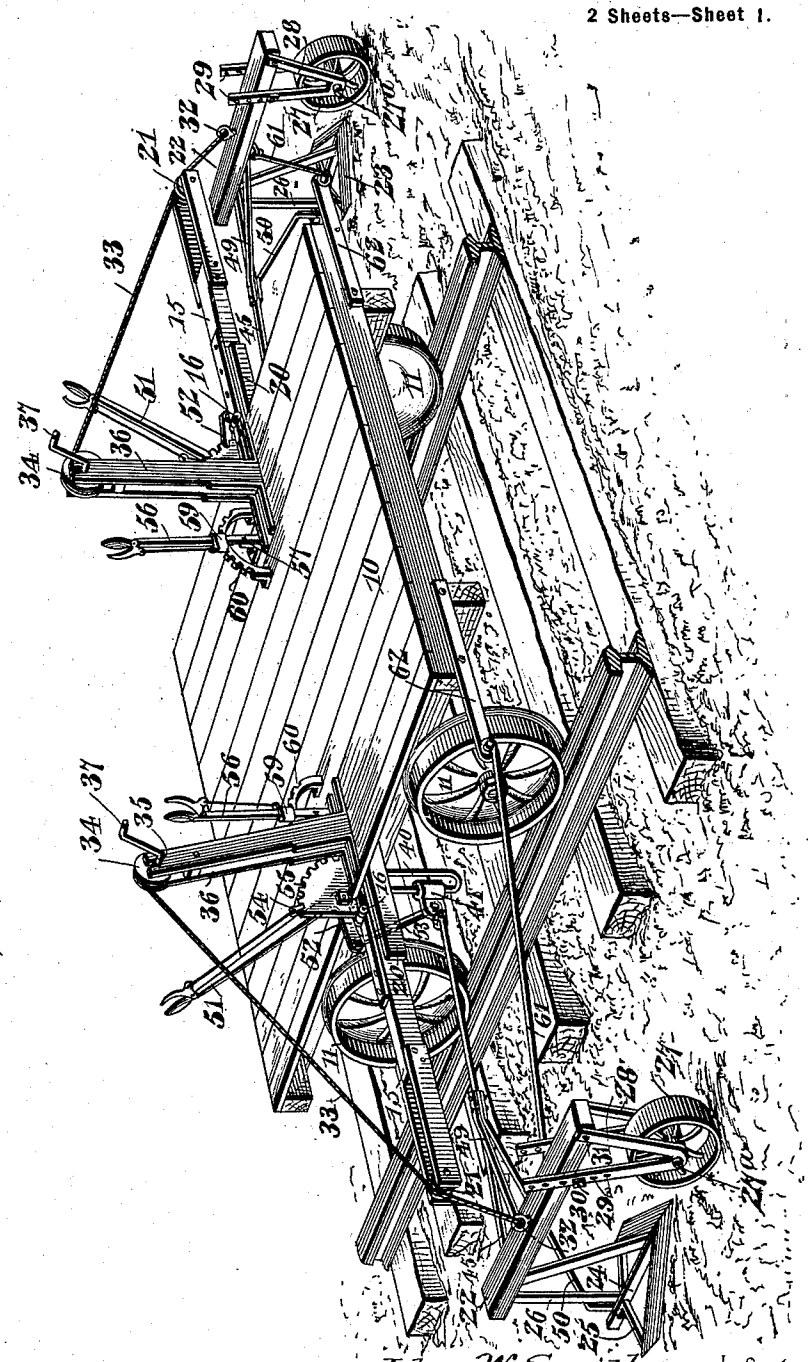

Fig. 1.

Witnesses
Jas. K. McCachran
H. J. Berridge

John W. Smith Inventor
By his Attorneys,
C. A. Snow & Co.

THE NORRIS PETERS CO., PHOTO-LITHO., WASHINGTON, D. C.

No. 647,535. Patented Apr. 17, 1900.

J. W. SMITH.

WEED CUTTER.

(Application filed July 3, 1899.)

(No Model.) 2 Sheets—Sheet 2.

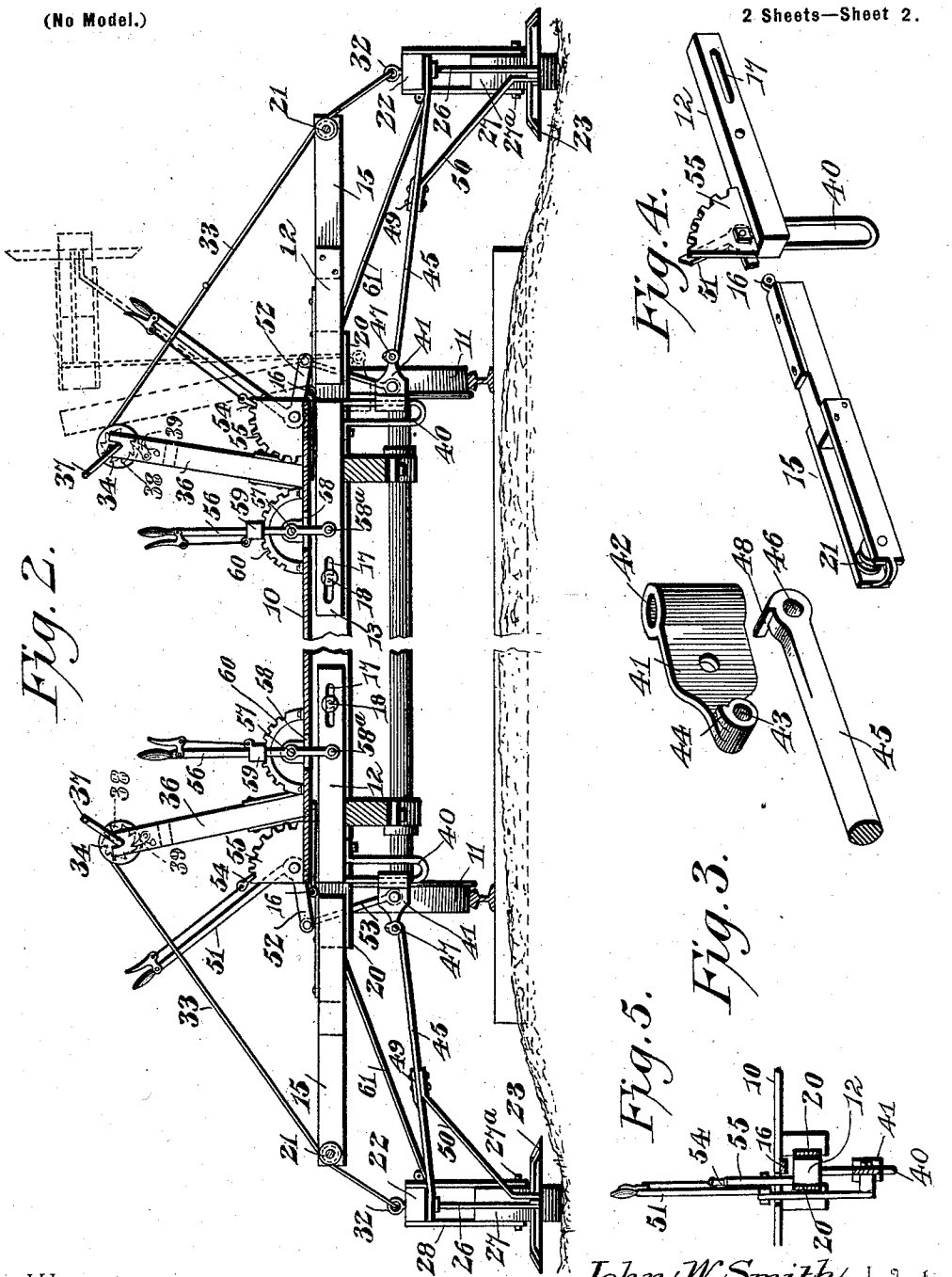

Witnesses

Jas. K. McCathran

H. F. Bernhard

John W. Smith Inventor

By his Attorneys.

C. A. Snow & Co.

THE NORRIS PETERS CO., PHOTO-LITHO., WASHINGTON, D. C.

UNITED STATES PATENT OFFICE.

JOHN W. SMITH, OF CHAPMAN, KANSAS.

WEED-CUTTER.

SPECIFICATION forming part of Letters Patent No. 647,535, dated April 17, 1900.

Application filed July 3, 1899. Serial No. 722,724. (No model.)

To all whom it may concern:

Be it known that I, JOHN W. SMITH, a citizen of the United States, residing at Chapman, in the county of Dickinson and State of Kansas, have invented a new and useful Weed-Cutter, of which the following is a specification.

My invention relates to improvements in weed-cutters for the expeditious destruction of vegetable growths on both sides of railway-tracks adjacent to the ties thereof.

One object of the invention is to provide an improved cutter appliance which will closely follow the contour of the ground or "shoulder" adjacent to the track in order to present the cutter-blade in proper working position and to minimize the liability of injury to said cutter appliance.

A further object is to provide improved means for raising the cutter appliance out of the way of bridges, track-switches, and other obstructions adjacent to the track, such lifting means arranged to enable the cutter to assume a compact relation to the car and to lower the cutter with ease and facility.

A further object is to provide means by which the cutter appliance may be tilted or canted to conform to the slope of the track-shoulder, such hinging means being carried by a car in a position conveniently accessible to the workmen.

With these ends in view the invention consists in the novel combination of devices and in the construction and arrangement of parts, which will be hereinafter fully described and claimed.

In the drawings, Figure 1 is a perspective view of a railway hand-car equipped on both sides thereof with weed-cutting appliances constructed in accordance with my invention. Fig. 2 is a vertical transverse sectional elevation through the hand-car, illustrating the weed-cutting appliances. Fig. 3 is an enlarged fragmentary view of the adjustable traveler and a part of an arm or bar for canting or tilting a cutter head-block to show more clearly the stop-hinge. Fig. 4 is a detail perspective view of one slidable beam and the devices carried thereby and the suspension-arm which serves to loosely suspend the cutter appliance at one side of the car. Fig. 5 is a detail cross-section.

The same numerals of reference are used to indicate like and corresponding parts in each of the several figures of the drawings.

In carrying my invention into practice I employ a structure of that class known to those skilled in railway equipment as "hand-cars," and in Figs. 1 and 2 an ordinary car is shown as having a platform 10, which is on a truck provided with axles having the carrying-wheels 11. It is to be understood that this car is designed to be propelled by hand, either by coupling the car to another car having a hand-operated propelling mechanism or by providing the car herein shown with such propelling mechanism. No novelty for the car *per se* is claimed in this application, because the invention relates to the weed-cutter and the mechanism for adjusting and controlling the same.

The cutter mechanism with which the car is provided includes two cutter appliances, one of said appliances being provided on each side of the car-platform. These cutter appliances are suspended in their working positions by means of arms 15 and the cables 33, and said cutter appliances are adjusted in substantially-horizontal directions inward toward and outward from the car by devices hereinafter described, said devices being carried by the slidable beams 12 13. Said beams are arranged in horizontal positions, so as to be supported by the framework for the platform, each beam having an end thereof extended or projected from one side of said platform. With the head-block 22 of each cutter appliance is associated an arm 15, arranged to permit ready folding of the cutter appliance into compact relation to the car when it passes bridges, signals, or structures adjacent to the track, and in Figs. 2 and 4 this arm is shown as being hinged or jointed at 16 with the car-platform. Each slidable beam 12 or 13 is fitted in the framework of the car so as to lie below the platform 10, and said horizontally-slidable beam is confined in place by the provision of a slot 17 in the beam and by the employment of a bolt 18, which is fixed to the car-frame and arranged loosely in the slot 17, whereby each beam may be adjusted endwise within the limit of the slot 17. This arm 15 is adapted to be raised to the upright position with the cutter appliance, as indicated by dotted lines in

Fig. 2. The slidable beam 12 or 13 is provided at its free end with the pair of brace-plates 20, which are suitably fixed thereto in order to project a proper distance beyond said beam for the purpose of embracing the hinged arm 15 when the latter is lowered into alined relation to the beam 12 or 13, whereby the plates serve to embrace the inner hinged end of the arm 15, so as to stay the latter and minimize the strain on the hinge or pivotal joint 16.

Each cutter appliance consists of a head-block 22, a share 23, a horizontal bar 24, braces 25, a stock 26, a guide-roller 27, and a hanger 28. The share or blade 23 consists of wings or members arranged in divergent positions, so as to present a V-shaped appearance in plan view. The stock 26 is firmly united to the head-block so as to depend therefrom at or near the rear end thereof, and the members of this stock are fastened to the horizontal bar 24, the latter being disposed centrally between the divergent wings of the blade or share. The braces 25 are fastened to the bar and to the wings of the blade for reinforcing the latter. I prefer to make this blade or share of a single piece of steel and to provide its wings with beveled cutting edges, thus making the blade simple and durable in construction and adapting said blade to operate with a draw or shear cut on the vegetable growths, the shear cut being due to the inclination of the cutting edge on each blade of the share. This blade or share is disposed below and parallel to the head-block near one end thereof; but the guide-roller 27 is disposed at or near the other end of the head-block, so as to lie in advance of the point of the blade or share. This guide-roller has its shaft or axle 27^a mounted in U-shaped hangers 28, one leg of each hanger being pivotally connected, as at 31, to the head-block 22, while the other leg of the hanger is formed with a series of apertures 29, through one of which passes an adjusting-bolt 30. It is to be observed that the hangers are pivotally connected by one leg to the head-block and that the other leg of said hangers is shiftably connected to the head-block for the purpose of varying the relation of the guide-roller 27 to the share or blade, thus regulating the position of the blade forming a part of the cutter appliance to the ground or shoulder of the track. The roller is designed to travel on the ground in advance of the blade, thus making the cutter appliance follow the contour of the ground, so as to present the blade in proper position to cut the weeds; but as the cutter appliance is loosely suspended to give in an upward direction the roller is made to elevate the entire cutter device in case it strikes a stone or other obstruction in its path, thus preventing injury to the cutter device.

The head-block is provided with an eyebolt 32 at a point intermediate its length, to which eyebolt is fastened one end of an elevating and suspension cable 33. This cable is coiled or wrapped one or more times around a guide-sheave 21, which is journaled in a bifurcated or forked end of the pivotal arm 15, and from thence the cable passes to and is coiled around a windlass or spool 34. Said windlass has a shaft 35, which is journaled in proper bearings of a post or standard 36, the latter being fixed to the car-platform 10 near one side thereof. The shaft of this spool is provided with a crank 37, adapted to be rotated by hand for the purpose of winding the cable 33 on said spool and of lifting the pivotal beam member 15 and the cutter appliance to the raised inoperative position indicated by dotted lines in Fig. 2. When the weed-cutter is in a working position, the head-block of the cutter appliance lies below the pivotal arm 15 and in a vertical plane beyond the outer extremity thereof, as clearly shown by Fig. 2, and this cutter appliance is suspended in the proper working position by the arm and the cable 33, for which purpose a suitable locking contrivance should be provided to hold the windlass 34 against rotation and to prevent slacking of the cable 33. Any suitable means for holding the windlass 34 may be employed; but as an example I may employ a ratchet 38 on the windlass-shaft and a pawl 39 to engage with said ratchet.

It is well known that the slope or inclination of the shoulder adjacent to the ties varies in different tracks, and to make the cutter appliance follow closely to the slope of the shoulder I have provided means by which the cutter-blade may be canted or tilted to conform to the shoulder. One element of this means for canting the cutter appliance is a hanger 40, which is fixed to the slidable beam 12 or 13, so as to travel with the beam. On a part of this hanger 40 is mounted a traveler 41, the latter being clearly represented by Figs. 2 and 3. I prefer to make the traveler in a single piece of metal, with an eye 42 at one end and a hinge-eye 43 at its other end. The eye 42 occupies a vertical position and at right angles to the hinge-eye 43, the axis of the latter eye being horizontal, and this traveler is furthermore provided with an abrupt shouldered stop-lug 44, which protrudes beyond the metal from the eye 43, so as to present its shoulder into coöperative relation with a similar shoulder on a hinged arm 45. The eye 42 of the traveler is fitted slidably on a part of the hanger 40, so that the traveler may be adjusted in a vertical direction on the hanger, and as this hanger is attached to the beam 12 or 13 the traveler is capable of a horizontal adjustment with said beam 12 or 13; but at the same time the traveler is movable vertically on the hanger and independently of any adjustment of the beam. The adjustable arm 45 is provided at its inner end with a hinge-eye 46, and said inner end of the arm is adapted to be pivotally connected to the free end of the traveler by a hinge bolt or pintle 47, the latter passing through the alined eyes 43 46 of the traveler and arm, respec-

tively. This eye-formed inner end of the arm 45 is furthermore provided with a stop-lug 48, the latter adapted to project laterally from the arm and to coact with the lug 44 in order to limit the downward movement of the arm with relation to the traveler, whereby the arm and traveler are rigidly joined, so far as respects the downward movement of the arm when it assumes outwardly-extended working position. The outer end of this arm 45 is fastened to the head-block 22 of the cutter appliance, preferably near the rear end thereof, said arm having a brace 49, which is fastened to the head-block and to the arm, the arm being furthermore provided with a depending brace 50, which is fastened to the longitudinal bar 24 of the blade forming a part of the cutter appliance. It is to be noted that the head-block of the cutter appliance is suspended by the cable 33 and the outer end of the pivotal arm 15 and, furthermore, that the arm 45 is secured at a number of points rigidly to the cutter appliance, said arm being carried by a vertically-adjustable traveler which is mounted on a hanger.

It is to be understood that each entire cutter appliance is suspended beneath the outer end of one arm 15, so that the cutter appliance can move inward toward or outward away from the track. With the traveler in its lowest position on the hanger the rod 45 lies in a slightly-inclined or a substantially-horizontal position between the traveler and the suspended cutter appliance. An upward movement of the traveler draws the inner end of the rod 45 in a corresponding direction and tilts or inclines the suspended appliance with relation to the plane of the car for the purpose of making the blade or share of said cutter appliance conform to the angle or slope of the shoulder adjacent to the track. It is to be understood, furthermore, that the rod 45 is joined to the traveler solely for the purpose of folding in an upward direction with the arm 15 and the cutter appliance and that said rod 45 in its unfolded position is arrested or limited by the stop-shoulders between the rod and the traveler. A downward adjustment of the traveler causes the rod to push the suspended cutter appliance in an outward direction, thus enabling said cutter appliance to hang perpendicular to the plane of the arm 15 when the traveler is at the bottom of the hanger. During this operation the latch upon the lever 56 is disengaged from the segment 60 to permit longitudinal movement of the part 12, so that the hanger 40 may move forwardly to an extent sufficient to compensate for the outward swing of the head 22 under the influence of the upward movement of the bar 61. This adjustment of the traveler in a vertical direction on the hanger may be effected conveniently through the medium of a lever 51, which is fulcrumed to a segment 55 on the beam 12 or 13 at a point adjacent to the post 36 and immediately over the hanger, said lever having a short angular arm 52, which is connected by a link 53 to the traveler 41. (See Fig. 2.) The lever carries a latch 54, adapted to engage with a fixed segment 55 on the beam 12 or 13, as shown by Fig. 4, for holding the traveler at the desired elevation. The joint or hinge between the traveler and the arm 45 permits the arm to fold in an upward direction with the folding arm 15 and the cutter appliance when it is desired to move the latter out of its working position to clear obstructions in its path; but the downward movement of the pivotal arm 45 with relation to the traveler when the cutter appliance is lowered into its working position is limited by the stop-lugs between said arm and traveler.

The sliding beam 12 or 13 may be shifted in a horizontal direction beneath the platform through the medium of a lever 56, which is fulcrumed, as at 57, to the platform, the lower end of said lever passing through a slot 58 of the platform and connected pivotally at 58^a to the beam. The lever carries a latch 59, adapted to engage with the notch in a segment 60, also fixed to the platform. The shiftable adjustment which may be given to the beam 12 or 13 through the lever 56 is for the purpose of moving the beam inwardly in order to make the arm 45 occupy a compact relation to the side of the platform when the arm 15 and said arm 45 are raised with the cutter appliance.

By providing the hand-car with cutter appliances on each side thereof the weeds and vegetable growths on both sides of the track may be rapidly and economically destroyed when the car is drawn or propelled over the track; but as the cutter appliances and the adjusting devices therefor are independent it is evident that one cutter may be raised out of position while the other cutter may remain in service. Each cutter may be lowered into working position by rotating the windlass to uncoil the cable, and the angle of the cutter blade or share may be varied by shifting the position of the lever 51.

Changes may be made in the form and proportion of some of the parts, while their essential features are retained and the spirit of the invention embodied. Hence I do not desire to be limited to the precise form of all the parts as shown, reserving the right to vary therefrom.

I find it desirable to provide the stay-rods 61 for holding the cutter appliances in proper relation to the platform. Each stay-rod has pivotal connection at its outer end to the head-block of one cutter appliance; but the other end of the stay-rod is pivotally attached to an arm 62, which is fastened to one end of the platform.

Having thus described the invention, what I claim is—

1. In an apparatus of the character described, the combination with a car, of a cutter appliance having a normally-horizontal share or blade, means for suspending said

cutter appliance beyond one side of the car, and means substantially as described mounted on the car and connected operatively with said cutter appliance for tilting the latter bodily for the share or blade thereof to assume a downwardly and outwardly inclined position with relation to the plane of the car, for the purpose described, substantially as set forth.

2. In an apparatus of the character described, the combination with a car, of a suspension device having a member supported on, and movable to a folded position relatively to, said car, a cutter appliance suspended from said device and foldable with said device into compact relation to the car and having a normally-horizontal share or blade, means for adjusting the suspension device, and cutter-adjusting devices separate from the first-mentioned adjusting means and connected operatively with the cutter appliance to tilt the latter for its share or blade to assume an inclined position, for the purpose described, substantially as set forth.

3. In an apparatus of the character described, the combination with a car, of an arm projecting outwardly from said car, a cutter appliance, means connected with the cutter appliance passed over said arm for raising and lowering said appliance, and means for tilting or shifting said cutter appliance comprising a traveler limited to movement in a vertical path, a rod connected to said traveler and to the cutter appliance, and a lever for adjusting the traveler, substantially as set forth.

4. In an apparatus of the character described, the combination with a car-platform, of a supporting-arm having foldable connection with said platform, a cutter suspended below said arm and foldable therewith, a traveler guided on the platform, an arm attached to the cutter appliance and having a jointed connection with the traveler, and means for adjusting said traveler independently of the foldable adjustment of the arm, substantially as described.

5. In an apparatus of the character described, the combination with a car, of an arm having a hinged connection with said car and adapted to project outwardly therefrom, a spool or drum mounted on the car, a cutter appliance, a cable attached to the cutter appliance and connected to said spool or drum, said cable guided by the arm and serving to suspend the cutter appliance and to adjust the arm with said cutter appliance, and stays for the cutter appliance, substantially as described.

6. In an apparatus of the character described, the combination with a car-platform, of an arm having a jointed connection with said platform and foldable to an upright position with respect thereto, a windlass mounted on the platform, a cutter appliance, a cable connected at its respective ends to the cutter appliance and the windlass, and a stay-rod having jointed connection with the cutter appliance and the platform, substantially as described.

7. In an apparatus of the character described, the combination with a platform, of a cutter appliance arranged beyond and connected operatively to said platform, a hanger, a traveler fitted slidably on said hanger, and an arm fastened to the cutter appliance and united to the traveler by a stop-hinge adapted to limit the pivotal movement of the arm in a downward direction, substantially as described.

8. In an apparatus of the character described, the combination with a car, of an arm projecting outwardly from said car, a cutter suspended below said arm and means for tilting the suspended cutter bodily and permitting the cutter to be elevated with said arm comprising a traveler limited to adjustment in a vertical direction, an arm attached to the cutter appliance and having a stop-hinge connection with the traveler to limit the downward movement of said arm, and means for adjusting the traveler and arm in a vertical direction, substantially as described.

9. In an apparatus of the character described, the combination with a car-platform, of an arm having a hinge connection with the platform, a beam connected with said platform for shiftable adjustment thereon, a cutter appliance, a suspension-cable guided by said arm and connected to the cutter appliance, a traveler slidably confined on the shiftable beam, an arm connected to the cutter appliance and jointed to the traveler, and means for adjusting the traveler independently of the beam, substantially as described.

10. In an apparatus of the class described, the combination of a slidable beam, a hanger fast with the beam, a hinged arm, a cutter suspended below said arm, a traveler guided on the hanger, an arm connected to the cutter appliance and jointed to the traveler, and a lever linked to the traveler, substantially as described.

11. In an apparatus of the character described, the combination with a car, of a beam slidably confined on the car, an arm hinged to said beam, a cutter appliance suspended below said arm and foldable therewith, means for adjusting the beam, means for adjusting the arm and cutter appliance independently of the beam, and means for tilting the cutter appliance, substantially as described.

In testimony that I claim the foregoing as my own I have hereto affixed my signature in the presence of two witnesses.

JOHN W. SMITH.

Witnesses:
E. J. BARRETT,
J. C. MARTIN.