(12) INTERNATIONAL APPLICATION PUBLISHED UNDER THE PATENT COOPERATION TREATY (PCT)

(19) World Intellectual Property Organization
International Bureau

(43) International Publication Date
28 June 2012 (28.06.2012)

WIPO | PCT

(10) International Publication Number
WO 2012/084057 A1

(51) International Patent Classification:
B81B 7/02 (2006.01) *H01G 5/019* (2006.01)
B81B 7/04 (2006.01) *H01G 5/014* (2006.01)

(21) International Application Number:
PCT/EP2010/070686

(22) International Filing Date:
23 December 2010 (23.12.2010)

(25) Filing Language: English

(26) Publication Language: English

(71) Applicant *(for all designated States except US)*: **EPCOS AG** [DE/DE]; St.-Martin-Str. 53, 81669 Munich (DE).

(72) Inventors; and

(75) Inventors/Applicants *(for US only)*: **LIU, Zhidong** [GB/GB]; 6 Rowbarrow close, Poole Dorset BH17 9EA (GB). **REIMANN, Klaus** [DE/NL]; Brucknerplein 4, NL-5653 ER Eindhoven (NL). **BOYLE, Kevin R.** [GB/GB]; 43 Depot Road, Horsham West Sussex RH13 5HE (GB). **DE JONGH, Maurice** [NL/NL]; Lavendelstr. 10, NL-6542 KN Nijmegen (NL). **BIELEN, Jeroen** [NL/NL]; Stiftstraat 21, NL-6584 AK Molenhoek (NL).

(74) Agent: **ASSOCIATION NO. 175, EPPING HERMANN FISCHER PATENTANWALTSGESELLSCHAFT MBH**; Ridlerstr. 55, 80339 Munich (DE).

(81) Designated States *(unless otherwise indicated, for every kind of national protection available)*: AE, AG, AL, AM, AO, AT, AU, AZ, BA, BB, BG, BH, BR, BW, BY, BZ, CA, CH, CL, CN, CO, CR, CU, CZ, DE, DK, DM, DO, DZ, EC, EE, EG, ES, FI, GB, GD, GE, GH, GM, GT, HN, HR, HU, ID, IL, IN, IS, JP, KE, KG, KM, KN, KP, KR, KZ, LA, LC, LK, LR, LS, LT, LU, LY, MA, MD, ME, MG, MK, MN, MW, MX, MY, MZ, NA, NG, NI, NO, NZ, OM, PE, PG, PH, PL, PT, RO, RS, RU, SC, SD, SE, SG, SK, SL, SM, ST, SV, SY, TH, TJ, TM, TN, TR, TT, TZ, UA, UG, US, UZ, VC, VN, ZA, ZM, ZW.

(84) Designated States *(unless otherwise indicated, for every kind of regional protection available)*: ARIPO (BW, GH, GM, KE, LR, LS, MW, MZ, NA, SD, SL, SZ, TZ, UG, ZM, ZW), Eurasian (AM, AZ, BY, KG, KZ, MD, RU, TJ, TM), European (AL, AT, BE, BG, CH, CY, CZ, DE, DK, EE, ES, FI, FR, GB, GR, HR, HU, IE, IS, IT, LT, LU, LV, MC, MK, MT, NL, NO, PL, PT, RO, RS, SE, SI, SK, SM, TR), OAPI (BF, BJ, CF, CG, CI, CM, GA, GN, GQ, GW, ML, MR, NE, SN, TD, TG).

Published:

— *with international search report (Art. 21(3))*

(54) **Title**: RF DEVICE AND METHOD FOR TUNING AN RF DEVICE

FIG 3

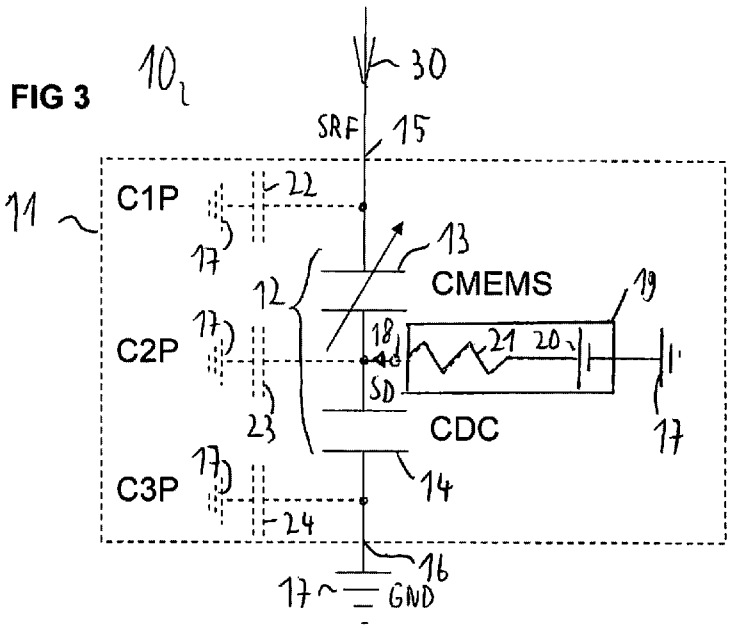

(57) **Abstract**: An RF device (11) comprises a substrate (60) and a series circuit (12) of a tunable RF component (13) and a DC blocking capacitor (14). The series circuit (12) is arranged on the substrate (60) and couples an RF signal terminal (15) to a fixed voltage terminal (16) that is electrically isolated from the RF signal terminal (15). The tunable RF component (13) is coupled to the RF signal terminal (15), the DC blocking capacitor (14) is coupled to the fixed voltage terminal (16) and a driver terminal (18) is coupled to the tunable RF component (13).

WO 2012/084057 A1

Description

RF device and method for tuning an RF device

The present invention is related to an RF device, a system comprising an RF device and a method for tuning an RF device.

An RF device often comprises a component with a tunable capacitance value such as a varactor, a diode, or a micro-electro-mechanical system capacitor, abbreviated MEMS capacitor. Such a component needs a bias voltage. Thus, a DC blocking capacitor is placed at least at one terminal of the component with the tunable capacitance value.

Document WO 2006/065693 A1 refers to a slot antenna having a MEMS varactor for resonance frequency tuning.

Document WO 2006/129239 A1 is related to a planar antenna assembly with impedance matching. A circuit comprises tunable capacitors which are connected in series.

Publication "Distortion in Variable-Capacitance Diodes", Robert G. Meyer, Mark L. Stevens, IEEE Journal of Solid-State Circuits, Vol. SC-10, No. 1, February 1975, pp. 47 - 54 describes circuits with variable capacitance diodes.

Document WO 2010/106484 A1 is related to a bond frame integrated in electronic circuits. The closed bond frame forms an inductive element. Moreover, a series circuit of a MEMS capacitor and a further capacitor couples two areas of the bond frame. A terminal of the MEMS capacitor is electrically connected to a first area of the bond frame and

a terminal of the further capacitor is electrically connected to another area of the bond frame.

In document WO 2008/087585 A2, a MEMS system is described which comprises a capacitor switch array. The capacitor switch array comprises series circuits of a capacitor and a MEMS switch. The capacitance value of the capacitor switch array is tuned by setting the MEMS switches in an open or a closed state.

It is an object of the invention to provide an RF device, a system comprising an RF device and a method for tuning an RF device which reduces the parasitic effects from the DC blocking capacitor.

This object is achieved by an RF device, a system and a method for tuning an RF device according to the independent claims. Embodiments of the RF device are given in the dependent claims.

An RF device comprises a substrate and a series circuit of a tunable RF component and a DC blocking capacitor. The series circuit of the tunable RF component and the DC blocking capacitor is arranged on the substrate and couples an RF signal terminal to a fixed voltage terminal. The fixed voltage terminal is electrically isolated from the RF signal terminal. The tunable RF component is coupled to the RF signal terminal. The DC blocking capacitor is coupled to the fixed voltage terminal. Moreover, a driver terminal is coupled to the tunable RF component.

Since the DC blocking capacitor is connected to the fixed voltage terminal, parasitic effects from the DC blocking

capacitors such as parasitic capacitors have constant values which results in a reduced influence of the parasitic effects on the RF device. The RF device has a lower capacitance value and a higher capacitance ratio when the tunable RF component is tuned between its minimum and its maximum capacitance value and is connected to the RF signal terminal.

In an embodiment, the driver terminal is coupled to a node between the tunable RF component and the DC blocking capacitor.

In an alternative embodiment, the driver terminal is coupled to a control terminal of the tunable RF component.

In an embodiment, a reference potential terminal is coupled to the RF signal terminal such that the reference potential terminal is DC grounded. The RF signal terminal is, for example, connected to the reference potential terminal via a component or a circuit which allow a DC current flow between the RF signal terminal and the reference potential terminal. The RF signal terminal can be connected to the reference potential terminal via an antenna, an inductor or a resistor. Thus, the DC voltage across the tunable RF component is only influenced by a driver signal at the driver terminal. Only an AC voltage signal and no DC voltage can be tapped off at the RF signal terminal with reference to the reference potential terminal. Thus, no DC voltage change at the RF signal terminal influences the capacitance value of the tunable RF component. A co-design of a biased tunable impedance device and RF components is performed. One or more of the RF components which are connected to the RF device are DC grounded. The DC-ground enables the RF device to be connected directly with the RF components.

In an embodiment, the reference potential terminal is coupled to the fixed voltage terminal. Thus, the fixed voltage terminal and the RF signal terminal are both DC grounded, but only the fixed voltage terminal is AC grounded. The reference potential terminal provides a ground potential. The fixed voltage terminal has the ground potential. A RF input signal is provided to the RF signal terminal. The voltage of the RF input signal is different from the ground potential.

In an embodiment, the substrate is a semiconductor substrate. Preferably, the substrate is a silicon substrate. The substrate can be a silicon wafer or a silicon chip. Preferably, the substrate comprises a single crystal of the semiconductor.

In an embodiment, the tunable RF component is one of a group comprising a varactor diode, a PIN diode, a MEMS capacitor such as a capacitor with a moveable capacitor electrode, a capacitor with a tunable dielectric layer such as a ferro-electric layer, a galvanic MEMS component such as a micro relay and a p-channel high-electron-mobility transistor, abbreviated pHEMT. PIN diode is the abbreviation for a positively-doped/intrinsic/negatively-doped diode. The varactor diode, the PIN diode, the MEMS capacitor and the capacitor with the tunable dielectric layer obtain a spectrum of capacitance values between a minimum capacitance value and a maximum capacitance value depending on the driver signal. The galvanic MEMS component has an open and a closed state such that the series circuit of the tunable RF component and the DC blocking capacitor either show the capacitance value of the blocking capacitor or an approximately zero capacitance value.

In an embodiment, the RF device comprises a cap and a bond frame. The bond frame connects the cap to a first surface of the substrate. A cavity is enclosed by the cap and the substrate. The cavity can be filled with a gas, such as air. The tunable RF component and the DC blocking capacitor can be arranged inside the cavity on the first surface of the substrate. Thus, the cap encapsulates the substrate such that the influence of disturbances on the tunable RF component and the DC blocking capacitor are reduced.

In an embodiment, a system comprises the RF device and an antenna which is coupled to the RF signal terminal.

In a further development, the antenna is DC grounded or a connection line between the RF signal terminal and the antenna is DC grounded. By the DC grounding, a conductive path couples the RF signal terminal to the reference potential terminal.

Therefore, the driver signal controls the DC voltage across the tunable RF component such that the capacitance value of the tunable RF component is set.

In an embodiment, the system is applied in a mobile phone, a portable device, an RF-ID reader or a miniaturized, adaptive RF module.

In an embodiment, a method for tuning an RF device comprises providing an RF input signal that is DC grounded to an RF signal terminal and providing a ground potential to a fixed voltage terminal. A series circuit of a tunable RF component and a DC blocking capacitor is arranged on a substrate and couples the RF signal terminal to the fixed voltage terminal.

The fixed voltage terminal is electrically isolated from the RF signal terminal. The tunable RF component is coupled to the RF signal terminal. The DC blocking capacitor is coupled to the fixed voltage terminal. A driver signal controls the tunable RF component.

In an embodiment, the RF input signal is DC grounded by a resistive or an inductive connection of the RF signal terminal to a reference potential terminal. The ground potential is provided at the reference potential terminal. Preferably, the RF signal terminal is not AC grounded. The RF input signal is different from the ground potential. The RF input signal is free of a DC voltage.

The following description of figures of exemplary embodiments may further illustrate and explain the invention. Circuits, devices and components with the same structure and the same effect, respectively, appear with equivalent reference symbols. In so far as circuits, devices or components correspond to one another in terms of their function in different figures, the description thereof is not repeated for each of the following figures.

FIGs. 1 to 8 show exemplary embodiments of a system comprising an RF device and

FIGs. 9 to 13 show exemplary embodiments of an RF device.

FIG. 1 shows an exemplary embodiment of a system 10 comprising an RF device 11. The RF device 11 comprises a series circuit 12 having a tunable RF component 13 and a DC blocking capacitor 14. Moreover, the RF device 11 has an RF signal terminal 15 and a fixed voltage terminal 16. The fixed

voltage terminal 16 is directly and permanently connected to a reference potential terminal 17. The fixed voltage terminal 16 is alternatively connected to a supply voltage terminal. A terminal of the tunable RF component 13 is connected to the fixed voltage terminal 16. Correspondingly, a terminal of the DC blocking capacitor 14 is connected to the RF signal terminal 15.

Moreover, the RF device 11 comprises a driver terminal 18 which is connected to a node between the tunable RF component 13 and the DC blocking capacitor 14. A driver circuit 19 is connected to the driver terminal 18. The driver circuit 19 comprises a series connection of a voltage source 20 and a resistor 21. The driver circuit 19 is connected between the driver terminal 18 and the reference potential terminal 17. The driver circuit 19 is designed as a DC bias circuit. A first parasitic capacitor 22 is arranged between the reference potential terminal 17 and a node between the tunable RF component 13 and the fixed voltage terminal 16. A second parasitic capacitor 23 connects the reference potential terminal 17 to the node between the tunable RF component 13 and the DC blocking capacitor 14. Moreover, a third parasitic capacitor 24 couples the reference potential terminal 17 to a node between the DC blocking capacitor 14 and the RF signal terminal 15.

The system 10 further comprises a RF circuit 25 having further RF components. The RF circuit 25 is connected to the RF signal terminal 15. Moreover, an RF input terminal 26 is connected to a node between the RF circuit 25 and the RF signal terminal 15. The dashed rectangular line indicates the package of the RF device 11.

The RF device 11 provides a tunable capacitance value. An RF input signal SRF can be tapped at the RF input terminal 26. The RF input signal SRF is applied to the RF circuit 25 and to the RF signal terminal 15. The driver circuit 19 feds a driver signal SD to the driver terminal 18. Thus, the driver signal SD is provided across the tunable RF component 13 and sets the DC voltage across the tunable RF component 13. By means of the DC voltage across the tunable RF component 13, the capacitance value of the tunable RF component 13 is determined. The DC blocking capacitor 14 blocks a DC current from the RF signal terminal 15 to the tunable RF component 13. The overall capacitance value CS of the series circuit 12 can be calculated according to the following equation, if the parasitic capacitors 22, 23, 24 are neglected:

$$CS = \frac{CMEMS \cdot CDC}{CMEMS + CDC} \quad ,$$

wherein CMEMS is the capacitance value of the tunable RF component 13 and CDC is the capacitance value of the DC blocking capacitor 14. Since the capacitance value CMEMS is smaller than the capacitance value CDC, the capacitance value CS of the series circuit 12 is approximately equal to the capacitance value CMEMS of the tunable RF component 13.

If the parasitic capacitors 22, 23, 24 are not neglected, the capacitance value CS of the series circuit 12 can be calculated according to the following equations:

$$CS = \frac{1}{\left(\frac{1}{C2P + CMEMS} + \frac{1}{CDC}\right)} + C3P \approx CMEMS + C2P + C3P \quad ,$$

wherein C2P is the capacitance value of the second parasitic capacitor 23 and C3P is the capacitance value of the third parasitic capacitor 24.

In the "closed" state, the tunable RF component 13 obtains a high capacitance value, whereas in an "open" state, the tunable RF component 13 obtains a low capacitance value. The capacitance ratio between the "close" and "open" states for the series circuit 12 shown in Figure 1 is

$$Ratio = \frac{CMEMS\_C + C2P + C3P}{CMEMS\_O + C2P + C3P} \approx \frac{CMEMS\_C}{CMEMS\_O + C2P + C3P} \quad ,$$

wherein CMEMS_C is the capacitance value of the tunable RF component 13 in the "closed" state and CMEMS_O is the capacitance value of the tunable RF component 13 in the "open" state. Figure 1 shows a typical configuration for a shunted RF device 11, wherein only one port of the RF device 11 needs biasing. The RF device 11 can be named as a MEMS switch.

RF components are usually not DC-grounded and the DC voltage on RF components might differ from application to application. A general-purpose RF device therefore best provides floating connections. This means that for devices that need a bias voltage, such as MEMS or varactor diodes, a DC blocking capacitor 14 is placed at the connections of the device. In the most versatile configuration this means that each port of the device needs a DC blocking capacitor 14 and a bias circuit to set the appropriate voltage level. Each bias circuit and blocking capacitor 14 causes losses and adds parasitic impedances.

FIG. 2 shows a further exemplary embodiment of the system 10. The system 10 comprises an antenna 30 that is connected to the RF signal terminal 15. The system 10 is a MEMS-switched antenna arrangement.

FIG. 3 shows an exemplary embodiment of the system 10 according to the principle presented. The system 10 shown in Figure 3 is a further development of the system shown in Figures 1 and 2. The series circuit 12 is arranged in such a way that a terminal of the tunable RF component 13 is connected to the RF signal terminal 15 and a terminal of the DC blocking capacitor 14 is connected to the fixed voltage terminal 16. The tunable RF component 13 is an adjustable RF component or a variable RF component. The tunable RF component 13 is realized as tunable capacitor. The antenna 30 is connected to the RF signal terminal 15. The RF device 11 is implemented as a MEMS device.

The antenna 30 is implemented such that a DC ground potential is applied by the antenna 30 to the RF signal terminal 15. The driver circuit 19 is connected between the driver terminal 18 and the reference potential terminal 17. Since a DC ground potential is applied to the RF signal terminal 15, the driver signal SD can set the DC voltage between the first and the second terminal of the tunable RF component 13. Thus, the capacitance value of the tunable RF component 13 is solely controlled by the driver signal SD and not by the RF input signal SRF. The first parasitic capacitor 22 couples a node between the tunable RF component 13 and the RF signal terminal 15 to the reference potential terminal 17. Moreover, the third parasitic capacitor 24 connects the reference potential terminal 17 to a node between the DC blocking capacitor 14 and the fixed voltage terminal 15. Thus, the

three parasitic capacitors 22, 23, 24 are located at the same terminals of the tunable RF component 13 and the DC blocking capacitor 14 such as in Figures 1 and 2.

The capacitance value CS of the series circuit 12 can be calculated according to the following equations:

$$CS = \frac{1}{(\frac{1}{C2P + CDC} + \frac{1}{CMEMS})} + C1P \approx \frac{1}{(\frac{1}{CDC} + \frac{1}{CMEMS})} + C1P$$

$$CS \approx CMEMS + C1P \quad ,$$

wherein CDC is the capacitance value of the DC blocking capacitor 14, CMEMS is the capacitance value of the tunable RF component 13, C1P is the capacitance value of the first parasitic capacitor 22 and C2P is the capacitance value of the second parasitic capacitor 23.

The capacitance ratio between the "close" and "open" states for the series circuit 12 shown in Figure 3 is:

$$Ratio = \frac{CMEMS\_C + C1P}{CMEMS\_O + C1P} \approx \frac{CMEMS\_C}{CMEMS\_O + C1P}$$

If the sum of the capacitance values C2P and C3P is larger than the capacitance value C1P, then the capacitance value CS of the RF device 11 according to Figure 3 is smaller than the capacitance value CS of the RF device 11 according to Figure 1. Further on, the capacitance ratio of the RF device 11 of Figure 3 is larger than the capacitance ratio of the RF device 11 according to Figure 1. This is for example the case, if the DC blocking capacitor 14 adds a lot of parasitic

effects or the capacitance value C2P is not smaller than the capacitance value C1P.

According to Figure 3, the RF device 11 is directly connected with the DC-grounded antenna 30. The system 10 not only minimises the parasitic effects from the DC blocking capacitor 14, but also reduces loss into the DC bias resistor 21. In Figure 3, a co-design of a biased tunable impedance device such as the RF device 11 and RF components such as the antenna 30 is described. By means of the antenna 30 that is DC grounded, the system 10 is optimised. The advantages of the RF device 11 according to Figure 3 in comparison to the RF device 11 of Figure 1 are: The RF device 11 in Figure 3 has lower loss, i.e. higher quality factor. The RF device 11 in Figure 3 provides a lower minimum capacitance. Moreover, the RF device 11 in Figure 3 has a higher capacitance ratio between the "close" and "open" states.

In FIG. 3 to 13, a co-design of the RF device 11 that can be implemented as MEMS device and RF components such as the RF circuit 25 and the antenna 30 is described. The RF device 11 is in shunt with the DC-grounded antenna 30 that means in a parallel circuit with the antenna 30. The RF device 11 comprises the tunable RF component 13, a silicon die and a package that seals the MEMS from humidity and other detrimental ambient influences as shown for example in Figures 9 and 13.

Advantageously, the bias feed point that is the driver terminal 18 has a lower RF voltage value due to the voltage division between the tunable RF component 13 and the DC blocking capacitor 14, and hence dissipates less power that means loss into the bias resistor 21.

In an alternative embodiment, the tunable RF component 13 can be implemented as a RF switch. The RF switch can be designed as a RF MEMS switch. The RF MEMS switch can be realized as a micro relay. In this case, the driver circuit 19 is connected to a control terminal of the tunable RF component 13 and not to the node between the tunable RF component 13 and the DC blocking capacitor 14. The MEMS switch has a DC-ground at the RF input port 15. The RF MEMS switch is an example for a galvanic MEMS component. Alternatively, the tunable RF component 13 can comprise a varactor diode, a PIN diode, a capacitor with a tunable dielectric layer such as a ferroelectric layer or a pHEMT.

FIG. 4 shows a further exemplary embodiment of the system according to the principle presented. The system 10 of Figure 4 is a further development of the system explained by Figures 1 to 3. The antenna 30 is realized as a micro-strip antenna. The antenna 30 is implemented as a planar inverted F-antenna, abbreviated PIFA. The antenna 30 comprises a conducting line 31 which is arranged on a printed circuit board 32, abbreviated PCB. The antenna 30 comprises a pin 33 which is coupled to a reference potential terminal of the PCB 32. The pin 33 of the antenna 30 is designed as a shorting pin. Thus, the antenna 30 is realized as a DC grounded antenna. Figure 4 illustrates a co-design of a MEMS device and RF components.

FIG. 5 shows a further exemplary embodiment of the system according to the principle presented. The system 10 depicted in Figure 5 is a further development of the system shown in Figures 1 to 4. The DC blocking capacitor 14 is realized as an additional tunable RF component 35. The additional tunable RF component 35 is designed such that it operates as a DC blocking capacitor. Thus, the driver signal SD is applied to

the tunable RF component 13 and to the additional tunable RF component 35. Since both capacitors 13, 35 of the series circuit 12 are tunable, the capacitance ratio is further increased. The antenna 30 acts as an RF component with a DC ground. The RF device 11 is realized as an RF MEMS matrix. The RF MEMS matrix is a MEMS matrix in series.

FIG. 6 shows a further exemplary embodiment of the system according to the principle presented. The system 10 of Figure 6 is a further development of the system described by Figures 1 to 5. The RF device 11 additionally comprises a further series circuit 40 which comprises a further tunable RF component 41 and a further DC blocking capacitor 42. The further DC blocking capacitor 42 is connected to the fixed voltage terminal 16. A further RF signal terminal 43 of the RF device 11 is connected to the further tunable RF component 41. A conducting line of the system 10 connects the RF signal terminal 15 to the further RF signal terminal 43.

The RF device 11 is realized as an RF MEMS matrix. The antenna 30 is an example for an RF component with a DC ground. The further series circuit 40 obtains a further first, a further second and a further third parasitic capacitor 44 to 46. Moreover, a further driver terminal 47 is connected to a node between the further tunable RF component 41 and the further DC blocking capacitor 42. A further driver circuit 48 couples the further driver terminal 47 to the reference potential terminal 17 and comprises a further voltage source 49 and a further resistor 50. The RF device 11 comprises a MEMS matrix in parallel. The DC bias ports 18, 47 can control each MEMS switch or variable capacitor individually. The RF device 11 can be formed as a MEMS matrix

that includes more than one MEMS switch in series or in parallel, as shown in Figure 5 and 6.

In an alternative, not shown embodiment, the further series circuit 40 is arranged between the RF signal terminal 15 and the fixed voltage terminal 16. Thus, the series circuit 12 and the further series circuit 40 are connected inside the RF device 11. The further RF signal terminal 43 can be omitted.

In an alternative, not shown embodiment, the driver circuit 19 and the further driver circuit 48 are realized at least partially outside of the RF device 11.

FIG. 7 shows a further exemplary embodiment of a system according to the principle presented that is a further development of the system shown in Figures 1 to 6. The system 10 comprises an inductor 51 that is connected between the RF signal terminal 15 and the reference potential terminal 17. The inductor 51 is formed as a coil. The system 10 is realized as a bandpass filter. The bandpass filter has a first order. The system 10 can be integrated in a TV tuner. The driver circuit 19 is realized partly on the RF device 11 and partly in the system 10 outside of the RF device 11. The RF device 11 comprises an impedance 52 which is arranged inside the RF device 11. The system 10 comprises the voltage source 20. The voltage source 20 is realized outside of the RF device 11. Thus, the driver circuit 19 comprises the impedance 52 and the voltage source 20. The inductor 51 provides a DC grounding of the RF terminal 15.

In an alternative, not shown embodiment, the antenna 30 is connected to the RF terminal 15. The antenna 30 is grounded.

In a further development, the antenna 30 replaces the inductor 51.

FIG. 8 shows a further exemplary embodiment according to the principle presented. The system 10 shown in Figure 8 is a further development of the system shown in Figures 1 to 7. The RF device 11 comprises the series circuit 12 and the further series circuit 40 is shown in FIG. 6. Moreover, the further driver circuit 48 comprises a further impedance 54 and the further voltage source 49. The further impedance 54 is realized inside the RF device 11. The further voltage source 49 is realized on the system 10 outside of the RF device 11. Moreover, the inductor 51 couples the RF signal terminal 15 to the further RF signal terminal 43. The antenna 30 is connected to the RF signal terminal 15. The antenna 30 couples the RF signal terminal 15 to the reference potential terminal 17. A transceiver circuit 56 is connected to the further RF signal terminal 43. In Figure 8, a substitute resistance is shown for the transceiver circuit 56.

The system 10 comprises a matching circuit, whereas the antenna 30 and the inductor 51 provide a DC ground. The proposed principle can also be used for MEMS-switched RF filters or MEMS-switched impedance matching networks or any MEMS-switched circuit, provided that a DC-ground naturally exists at the RF signal terminal 15 of the RF device 11 in shunt. The tunable RF component 13 can be a single MEMS capacitor or a MEMS capacitor array. The RF device 11 can be fabricated in one package or in several packages.

In an alternative, not shown embodiment, a further RF device comprises the further series circuit 40. Thus, the series

circuit 12 and the further series circuit 40 are separated in two RF devices each having its package.

FIG. 9 shows an exemplary embodiment of the RF device according to the principle presented. The RF device 11 shown in Figure 9 is a further development of the RF device 11 shown in Figures 1 to 8. The RF device 11 comprises a substrate 60. Moreover, the RF device 30 comprises a cap 61 and a bond frame 62. The cap 61 is coupled to the substrate 60 via the bond frame 62. The bond frame 62 provides a hermetic seal of a cavity 63 between the cap 61 and the substrate 60. The cap 61 is fixed to a first surface of the substrate 60.

Furthermore, the RF device 11 comprises a first and a second feed-through 64, 65. The first feed-through 64 connects the RF signal terminal 15 to a first terminal of the tunable RF component 13. Similarly, the second feed-through 65 connects the fixed voltage terminal 16 to a first terminal of the DC blocking capacitor 14. A first feed-through capacitor 66 couples the first terminal of the tunable RF component 13 to the bond frame 62. Similarly, a second feed-through capacitor 67 couples the first terminal of the DC blocking capacitor 14 to the bond frame 62. The bond frame 62 is connected to the reference potential terminal 17. Thus, the bond frame 62 is grounded. The first and the second feed-through capacitors 66, 67 are parasitic capacitors having capacitance values CB1, CB2, respectively.

A cross-section of the RF device 11 is shown on the right side of FIG. 9. The substrate 60 is a silicon substrate. The silicon is off high resistivity. The cap 61 is a silicon micro-machined cap. The bond frame 62 comprises a eutectic

compound or an AuSn solder. The tunable RF component 13 and the DC blocking capacitor 14 are located on the first surface of the substrate 60. The DC blocking capacitor 14 is realized as a metal-insulator-metal capacitor, abbreviated MIM capacitor. The DC blocking capacitor 14 is thus implemented as a parallel plate capacitor.

The tunable RF component 13 comprises a first and a second electrode 68, 69 which are fabricated as a fixed and a moving electrode. The driver signal SD changes the distance between the first electrode 69 and the second electrode 68. Thus, the capacitance value of the tunable RF component 13 is controlled. A first and a second dielectric layer 70, 71 are deposited on the substrate 60. The first feed-through 64 comprises a first conducting line 73 between the first and the second dielectric layer 70, 71 which connects one of the electrodes of the tunable RF component 13 to the RF signal terminal 15. Similarly, a second conducting line 74 connects the first terminal of the DC blocking capacitor 14 to the fixed voltage terminal 16. The first and the second conducting lines 73, 74 are electrically isolated from the bond frame 62. The second dielectric layer 71 provides the electric isolation from the first and the second conducting lines 73, 74 to the bond frame 62.

A silicon die comprises the substrate 60, the tunable RF component 13 and the DC blocking capacitor 14. The cap 61 and the bond frame 62 form a package that seals the silicon die and mainly the tunable RF component 13 from the humidity and gas pressure of the ambient gas. The bond frame 62 is grounded to avoid cross-coupling between several signals.

In an alternative, not shown embodiment, the RF device 11 further comprises a third feed-through. Thus, the driver terminal 18 can be connected from outside of the RF device 11. The voltage source 20 of the driver circuit 19 is coupled via the third feed-through to the impedance 52 of the driver circuit 19.

FIG. 10 shows a further exemplary embodiment of an RF device according to the principle presented. The RF device 11 shown in Figure 10 is a further development of the RF device 11 shown in Figures 1 to 9. The bond frame 62 is realized as a floating bond frame. The bond frame 62 is not electrically connected to the reference potential terminal 17 or to the RF signal terminal 15 or to the fixed voltage terminal 16. The RF device 11 comprises a bond frame capacitor 75 which connects the bond frame 62 to the reference potential terminal 17. The bond frame capacitor 75 preferably can be a parasitic capacitor.

Some RF devices, notably the MEMS devices or components need hermetic packaging. A sealing can be achieved by bonding a top substrate with a cavity on the device. A metallic seal ring can be used at lower bonding temperatures and achieves a good hermeticity. The cap 62 and the bond frame 62 cause the first and the second parasitic feed-through capacitors 66, 67 having the capacitance values CB1 and CB2 of the signal lines to the bond ring 62, as shown in Figure 9 and 10.

Leaving the bond frame 62 floating means that a parasitic bond frame capacitor 75 having a capacitance value CB3 of the bond frame 62 to the reference potential terminal 17 becomes visible, but at the same time the effective capacitance at the two RF ports, which are the RF signal terminal 15 and the

fixed voltage terminal 16, becomes lower. The effective capacitance is then a series connection in various combinations of CB1, CB2 and CB3. For example, if the fixed voltage terminal 16 is set to the ground potential GND, the effective parasitic capacitance CEFF to ground at the RF signal terminal 15 can be calculated according to the following equation:

$$CEFF = \frac{1}{\frac{1}{CB1} + \frac{1}{CB2 + CB3}}$$

Thus, the value CEFF is lower than the capacitance value CB1 of the capacitor 66. Advantageously, parasitic effects are reduced by co-designing the system 10 together with the RF device 11. The floating bond frame 62 is advantageously suited for shunt configurations where cross-coupling is less a concern. In some applications, for example if there is only one RF function per package, then a co-design of the package and the board on which the RF device 11 is arranged as well as the surrounding is advantageously performed.

FIG. 11 shows a further exemplary embodiment of an RF device according to the principle presented. The RF device 11 illustrated in Figure 11 is a further development of the RF device 11 depicted in Figures 1 to 10. The RF device 11 comprises the first feed-through 64. The first feed-through 64 is realized as a bond frame crossing. The second feed-through 65 is omitted. Instead, the bond frame 62 is connected to the fixed voltage terminal 16. Thus, the bond frame 62 is used as an RF feed at one side of the RF device 11.

Thus, the metal of the bond frame 62 is applied as a feedline into the package. This can be used for parallel arrays and series arrays in one package. The fixed voltage terminal 16 is connected directly to the bond frame 62 and the metal of the bond frame 62 extends into the package and is connected to the top metal of the MEMS/MIM devices. The series losses in this connection are substantially reduced and, therefore, the quality-factor of the RF device 11 becomes higher. In parallel array cases, the ground potential GND is connected to the fixed voltage terminal 16 as well and the bond frame capacitor 75 that is a parasitic capacitor is shorted. Figure 11 illustrates a further exemplary co-design of MEMS device and RF components.

FIG. 12 shows a further exemplary embodiment of an RF device according to the principle presented. The RF device 11 of Figure 12 is a further development of the RF device 11 of Figures 1 to 11. The tunable RF component 13 comprises the first electrode 68 which is realized as a fixed button electrode. The first electrode 68 is arranged on the substrate 60. The second electrode 69 of the tunable RF component 13 is realized as a moving electrode. An isolator 80 is deposited on the first electrode 68. The isolator 80 fills only a part of a gap 87 between the first and the second electrode 68, 69. The second electrode 69 is designed such that the second electrode 69 can move towards and away from the isolator 80. The gap 87 between the first and the second electrode 68, 69 is realized at least partially as an air gap. The second electrode 69 has a distance D to the isolator 80. The first parasitic capacitor 22 results from the capacitance of the first electrode 68 to the backside of the substrate 60. The backside of the substrate 60 is covered by a metal layer 81. The metal layer 81 is connected to the

reference potential terminal 17. Furthermore, the RF device 11 comprises the DC blocking capacitor 14. Thus, the DC blocking capacitor 14 is connected in parallel to the first parasitic capacitor 22. Thus, the capacitance value CP1 of the first parasitic capacitor 22 is incorporated into the capacitance value CDC of the DC blocking capacitor 14.

The tunable RF component 11 that is a configurable element is most likely asymmetric in its vertical construction. A good example is a planar capacitor, which in the MEMS case would provide a higher capacitance density than symmetric, interdigitated capacitors. An asymmetric device has also different parasitic capacitances at its terminals. It therefore matters in which "polarity" the device is connected. The terminal with the higher parasitic capacitance, typically the first electrode 68, which is the bottom electrode, should be connected towards the ground or DC blocking capacitor 14 to avoid leakage of the RF signal through this parasitic capacitor. Figure 12 shows a cross-section of the tunable RF component 13 that is a MEMS capacitor and the preferred connection in a shunt configuration. Thus, a good RF performance is achieved.

FIG. 13 shows a further exemplary embodiment of the RF device according to the principle presented. The RF device 11 shown in Figure 13 is a further development of the RF device 11 shown in Figures 1 to 12. The tunable RF component 13 and the DC blocking capacitor 14 form a stack 83. The stack 83 is realized on the first surface of the substrate 60. The DC blocking capacitor 14 is arranged between the tunable RF component 13 and the substrate 60. Thus, the area of the substrate 60 is very efficiently used. A first electrode 85 of the DC blocking capacitor 14 is arranged on the substrate

60. The substrate 60 is realized as a dielectric material. The substrate 60 is a PCB or a ceramic such as a high temperature co-fired ceramic or a low temperature co-fired ceramic. A further isolator 84 is deposited on the first electrode 85 of the DC blocking capacitor 14. A second electrode 86 of the DC blocking capacitor 14 is arranged on the further isolator 84. The isolator 80 is deposited on the second electrode 86 of the DC blocking capacitor 14. The second electrode 86 of the DC blocking capacitor 14 also forms the first electrode 68 of the tunable RF component 13.

The tunable RF component 13 and the DC blocking capacitor 14 are parallel plate capacitors and have a common plate. The common plate is connected to the driver terminal 18. The gap 87 which comprises the isolator 80 and the air gap separates the first electrode 68 from the second electrode 69 of the tunable RF component 13. The parasitic capacitors of the tunable RF component 13 are reduced. The third parasitic capacitor 24 couples the first electrode 85 of the DC blocking capacitor 14 to the backside of the substrate 60.

In an alternative, not shown embodiment, the substrate 60 is a semiconductor substrate on which an isolating layer is deposited. Thus, an isolation of the first electrode 85 of the DC blocking capacitor 14 to the substrate 60 is provided.

The lower part of Figure 13 shows a combination of the cross-sections shown in FIG. 9 and 13. The first and the second dielectric layer 70, 71 of FIG. 9 are used as isolator 80 and as further isolator 84. Thus, the first conducting line 73 is arranged between the isolator 80 and the further isolator 84. Also, the second conducting line 74 is located between the isolator 80 and the further isolator 84. Openings in the

isolator 80 allow an electrical contact to the RF signal terminal 15 and to the fixed voltage terminal 16.

The RF device 11 of Figure 13 is similar to the RF device 11 of Figure 12 but with integrated DC decoupling capacitor. The parasitic capacitance is now shifted to the bottom electrode 85 of the DC blocking capacitor 14. The DC blocking capacitor 14 is integrated below the tunable RF component 13 that is a MEMS capacitor. The connection of the bias to the bottom electrode avoids actuation coupling of the anchors through the substrate 60. The anchors of the tunable RF component 13 are structures on the substrate 60 which hold the second electrode 69 above the first electrode 68. The second electrode 69 is the movable electrode and comprises a membrane. The first electrode 68 is the fixed electrode and is designed as backplate. The substrate 60 preferably can be a semiconducting substrate. By co-design of one RF function in one package, the parasitic capacitances can be reduced also in case the bond frame 62 is not grounded.

Reference numerals

10	system
11	RF device
12	series circuit
13	tunable RF component
14	DC blocking capacitor
15	RF signal terminal
16	fixed voltage terminal
17	reference potential terminal
18	driver terminal
19	driver circuit
20	voltage source
21	resistor
22	first parasitic capacitor
23	second parasitic capacitor
24	third parasitic capacitor
25	RF circuit
26	RF input terminal
30	antenna
31	conducting line
32	printed circuit board
33	pin
35	additional tunable RF component
36	fourth parasitic capacitor
37	fifth parasitic capacitor
40	further series circuit
41	further tunable RF component
42	further DC blocking capacitor
43	further RF signal terminal
44	further first parasitic capacitor
45	further second parasitic capacitor
46	further third parasitic capacitor

47	further driver terminal
48	further driver circuit
49	further voltage source
50	further resistor
51	inductor
52	impedance
54	further impedance
55	further voltage source
56	transceiver circuit
60	substrate
61	cap
62	bond frame
63	cavity
64	first feed-through
65	second feed-through
66	first feed-through capacitor
67	second feed-through capacitor
68	first electrode
69	second electrode
70	first dielectric layer
71	second dielectric layer
73	first conducting line
74	second conducting line
75	bond frame capacitor
80	isolator
81	metal layer
83	stack
84	further isolator
85	first electrode
86	second electrode
87	gap
SD	driver signal
SRF	RF input signal

GND	ground potential

Claims

1. RF device, comprising
- a substrate (60) and
- a series circuit (12) of a tunable RF component (13) and a DC blocking capacitor (14) such that the series circuit (12) is arranged on the substrate (60) and couples an RF signal terminal (15) to a fixed voltage terminal (16) that is electrically isolated from the RF signal terminal (15),

wherein the tunable RF component (13) is coupled to the RF signal terminal (15), the DC blocking capacitor (14) is coupled to the fixed voltage terminal (16) and a driver terminal (18) is coupled to the tunable RF component (13).

2. RF device according to claim 1,
wherein a reference potential terminal (17) is coupled to the RF signal terminal (15) and to the fixed voltage terminal (16) such that the RF signal terminal (15) and the fixed voltage terminal (16) are DC grounded.

3. RF device according to claim 1 or 2,
wherein the substrate (60) is a semiconductor substrate.

4. RF device according to one of claims 1 to 3,
wherein the tunable RF component (13) is directly connected to the RF signal terminal (15) that is arranged on the substrate (60) and the DC blocking capacitor (14) is directly connected to the fixed voltage terminal (16) that is arranged on the substrate (60).

5. RF device according to one of claims 1 to 4, wherein the tunable RF component (13) is one of a group comprising a varactor diode, a PIN diode, a MEMS capacitor such as a capacitor with a moveable capacitor electrode, a capacitor with a tunable dielectric layer such as a ferroelectric layer, a galvanic MEMS component such as a micro relay and a pHEMT.

6. RF device according to one of claims 1 to 5, comprising

- a cap (61) for covering at least partially a first surface of the substrate (60),
- a bond frame (62) which couples the cap (61) to the substrate (60) and
- a cavity (63) between the first surface of the substrate (60) and the cap (61).

7. RF device according to claim 6, comprising

- a first feed-through (64) having a first conducting line (73) which connects the series circuit (12) to the RF signal terminal (15) and is isolated from the bond frame (62) and
- a second feed-through (65) having a second conducting line (74) which connects the series circuit (12) to the fixed voltage terminal (16) and is isolated from the bond frame (62).

8. RF device according to claim 7, wherein the bond frame (62) is realized as a floating bond frame or a grounded bond frame.

9. RF device according to claim 6,
wherein the RF device (11) comprises a first feed-through (64) having a first conducting line (73) which connects the series circuit (12) to the RF signal terminal (15) and is isolated from the bond frame (62) and
wherein the fixed voltage terminal (16) is electrically connected to the bond frame (62).

10. RF device according to one of claims 1 to 9,
wherein the tunable RF component (13) has a first terminal having a first parasitic capacitor (22) and a second terminal having a second parasitic capacitor (23) that has a larger capacitance value than the first parasitic capacitor (22) and the tunable RF component (13) is arranged such that the second terminal of the tunable RF component (13) is connected to the DC blocking capacitor (14).

11. RF device according to one of claims 1 to 10,
wherein the tunable RF component (13) is implemented as capacitor and the DC blocking capacitor (14) is located between the tunable RF component (13) and the substrate (60).

12. RF device according to one of claims 1 to 11,
wherein the tunable RF component (13) that is implemented as capacitor and the DC blocking capacitor (14) comprise one common plate as a common electrode.

13. System,
comprising the RF device (11) according to one of claims 1 to 12 and an antenna (30) which is coupled to the RF signal terminal (15).

14. Method for tuning an RF device, comprising

- providing an RF input signal (SRF) that is DC grounded to an RF signal terminal (15),
- providing a ground potential (GND) to a fixed voltage terminal (16), wherein a series circuit (12) of a tunable RF component (13) and a DC blocking capacitor (14) is arranged on a substrate (60) and couples the RF signal terminal (15) to the fixed voltage terminal (16) that is electrically isolated from the RF signal terminal (15) such that the tunable RF component (13) is coupled to the RF signal terminal (15) and the DC blocking capacitor (14) is coupled to the fixed voltage terminal (16), and
- providing a driver signal (SD) that controls the tunable RF component (13).

FIG 1

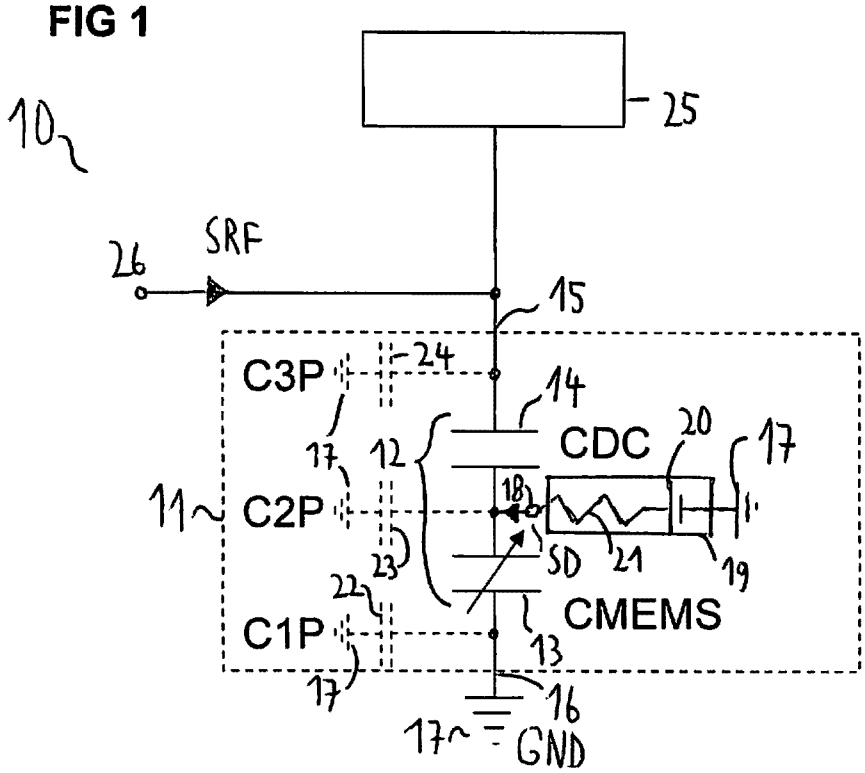
10
25
SRF
26
15
C3P
24
14
CDC
20
17
17
12
11
C2P
18
SD
21
19
23
22
CMEMS
C1P
13
17
16
17
GND

FIG 2

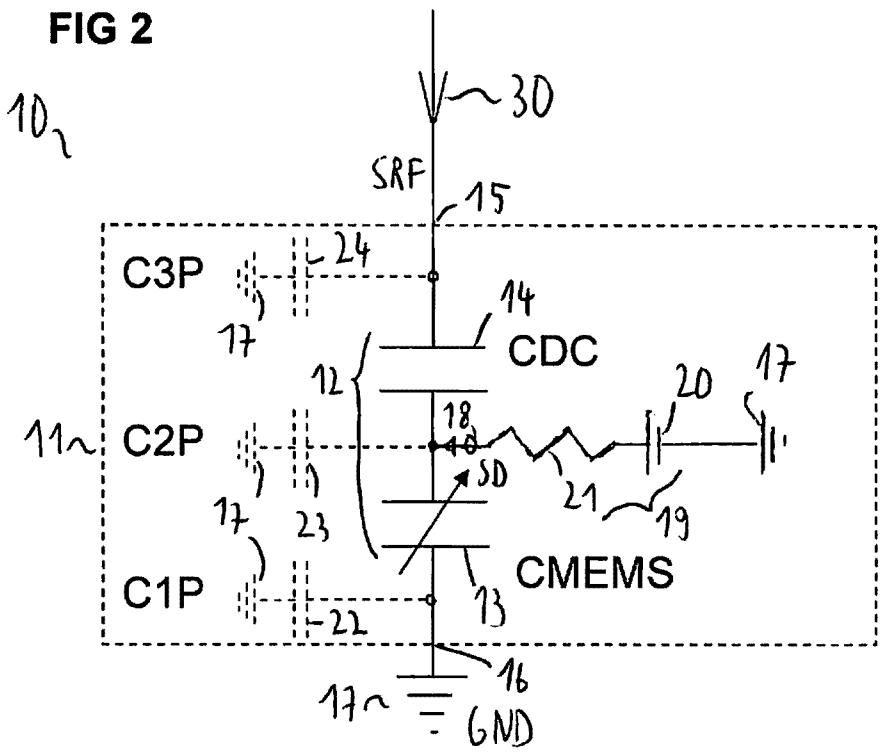
10
30
SRF
15
C3P
24
14
17
CDC
12
20
17
11
C2P
18
SD
21
19
17
23
CMEMS
C1P
13
22
16
17
GND

FIG 3

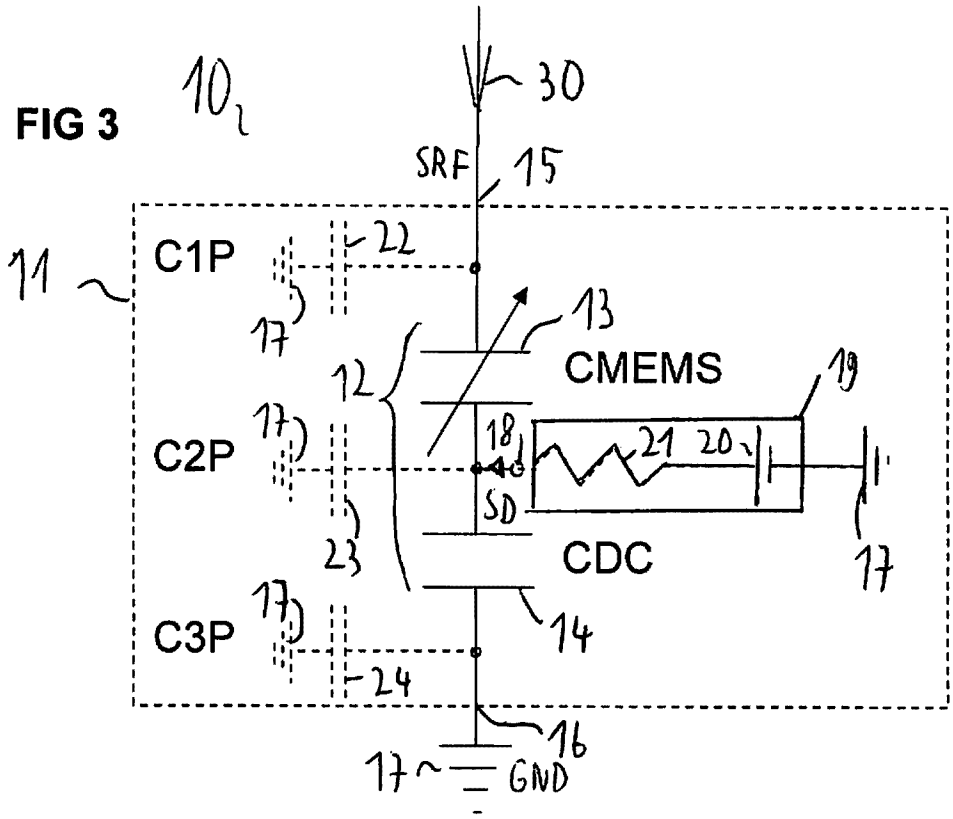
10
30
SRF
15
11
C1P
22
17
13
CMEMS
12
19
C2P
18
21
20
SD
23
CDC
C3P
14
24
16
GND

FIG 4

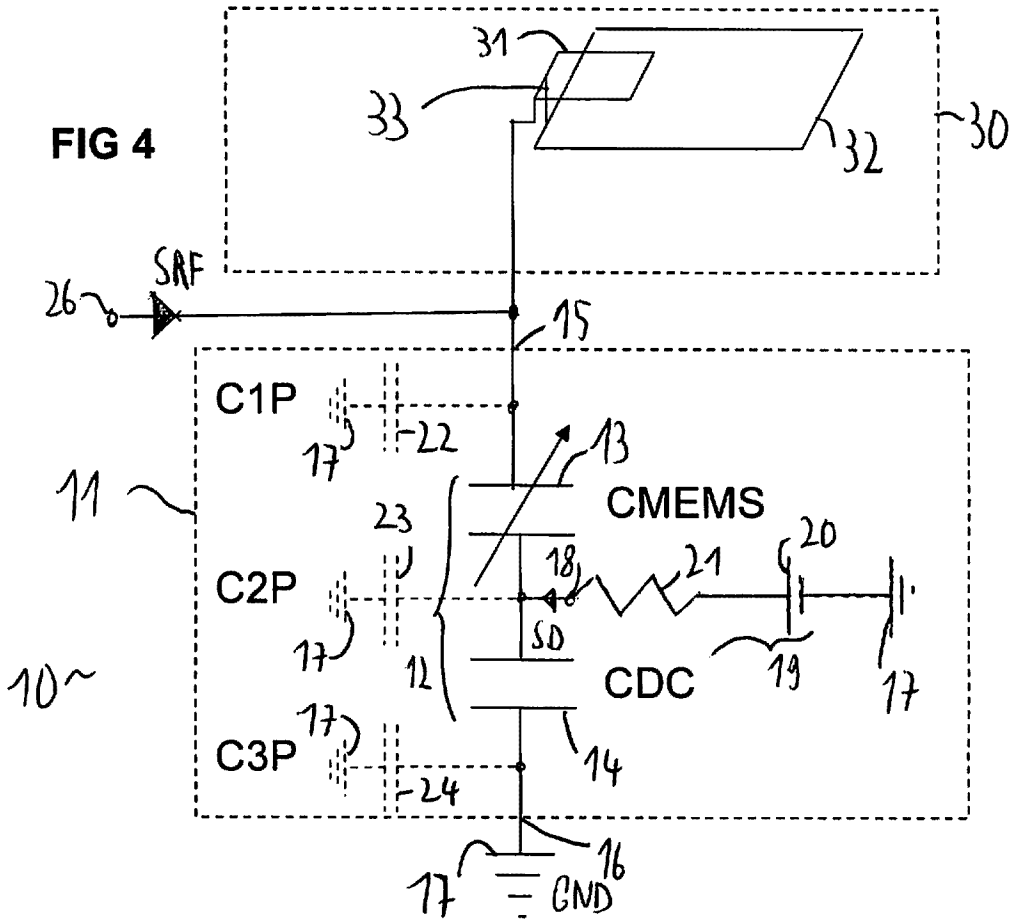
31
33
32
30
SRF
26
15
C1P
22
13
11
CMEMS
23
20
18
21
C2P
SD
10
12
CDC
19
17
C3P
14
24
16
GND

FIG 5

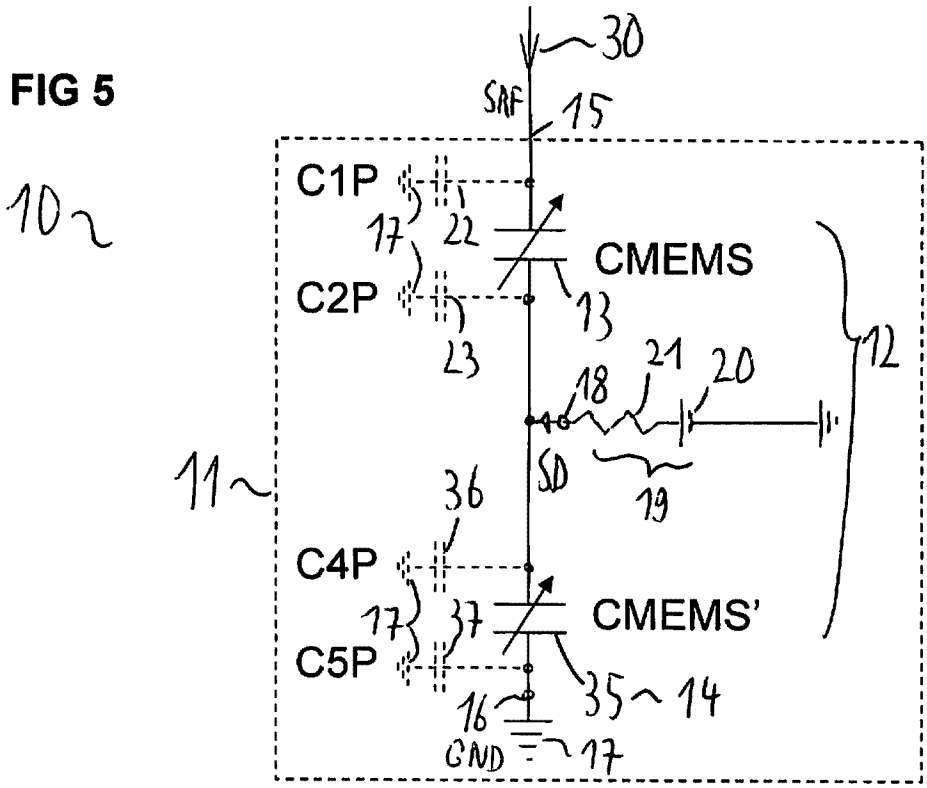
30
SRF
15
10
C1P
17
22
CMEMS
C2P
13
23
12
21
20
18
11
SD
19
36
C4P
17
37
CMEMS'
C5P
35
14
16
GND
17

FIG 6

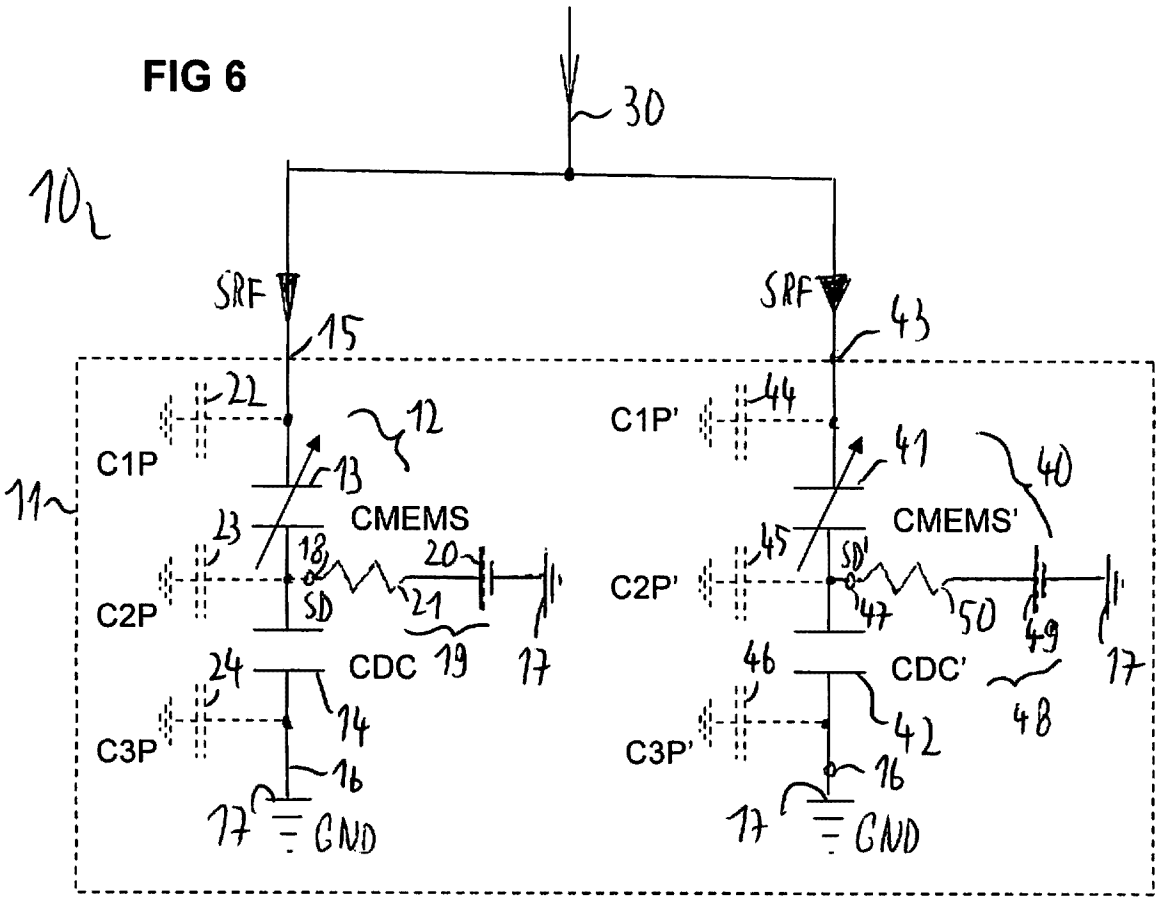
30
10
SRF
15
SRF
43
22
12
C1P
C1P'
44
41
40
13
11
CMEMS
CMEMS'
23
18
20
45
SD'
C2P
SD
21
C2P'
47
50
49
24
CDC
19
17
46
CDC'
17
14
48
C3P
C3P'
42
16
16
17
GND
17
GND

FIG 7

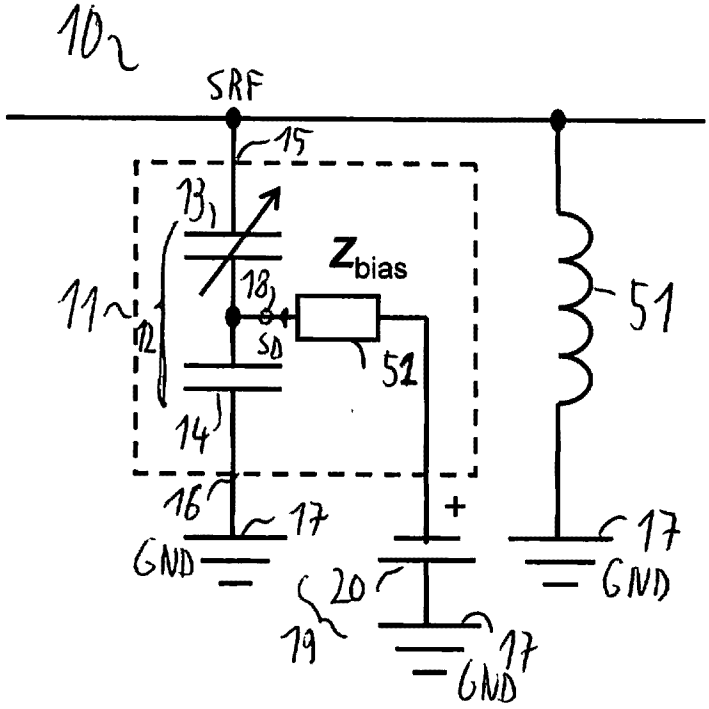
10
SRF
15
13
Zbias
18
11
12
SD
51
14
16
17
GND
+
20
19
17
GND
17
GND

FIG 8

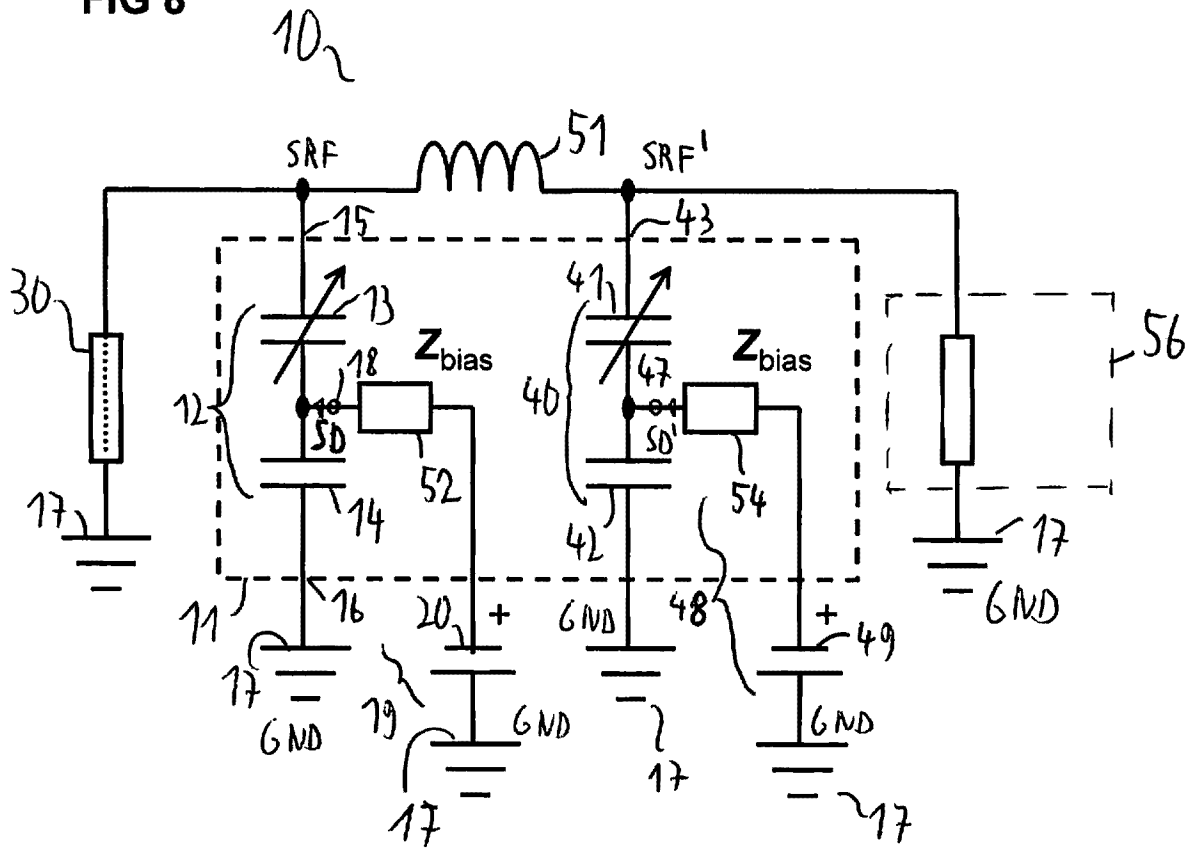
10
SRF
51
SRF'
15
43
30
13
41
Zbias
Zbias
56
18
47
12
40
SD
SD'
52
54
17
14
42
17
GND
11
16
20
+
GND
48
+
49
17
GND
19
GND
GND
17
17
17

FIG 9

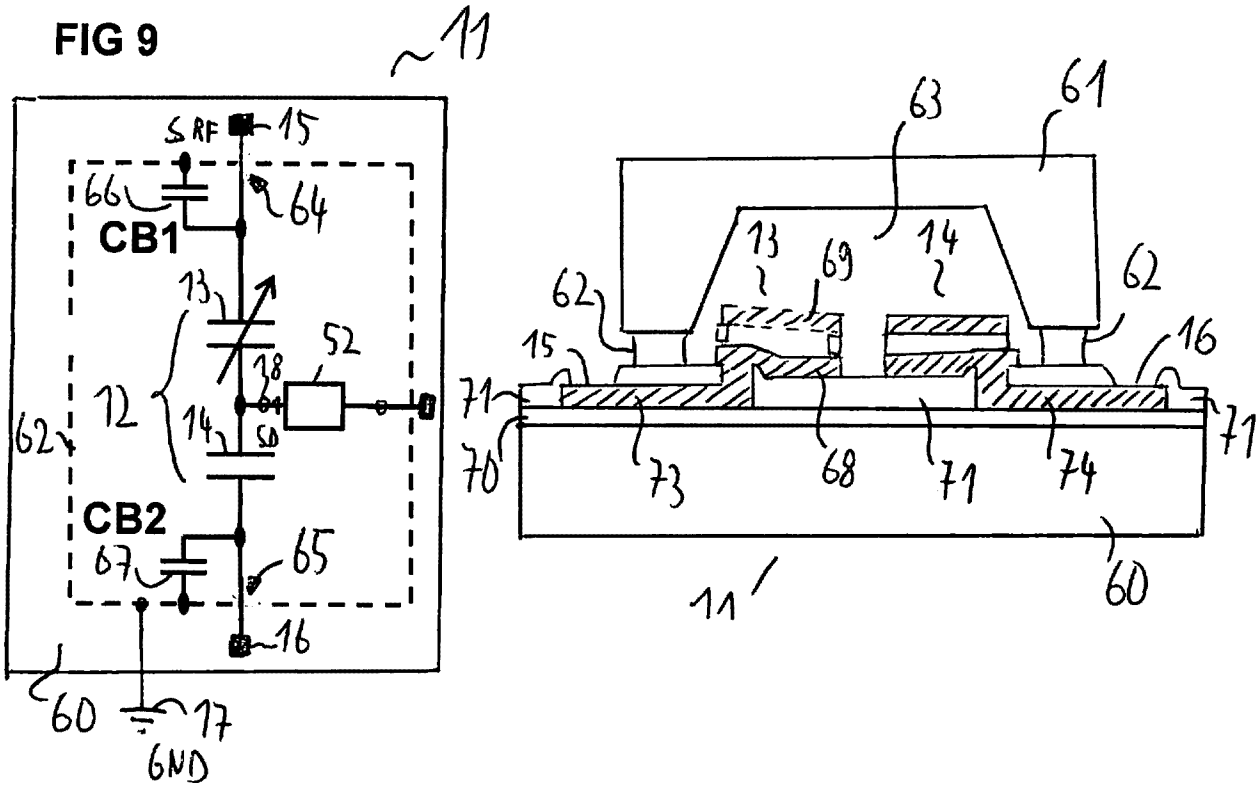
11
SRF
15
66
64
CB1
13
52
18
12
14
SD
62
CB2
67
65
16
60
17
GND
63
61
69
62
15
16
71
70
73
68
74
60

FIG 10

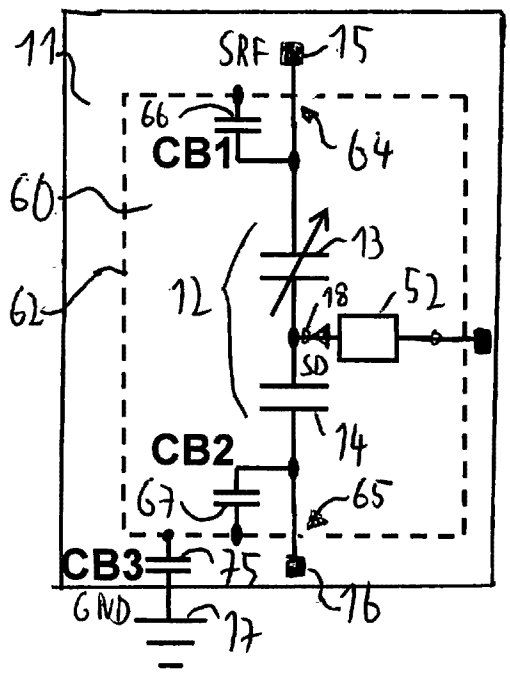
11
SRF
15
66
CB1
64
60
13
62
12
18
52
SD
14
CB2
67
65
CB3
75
16
GND
17

FIG 11

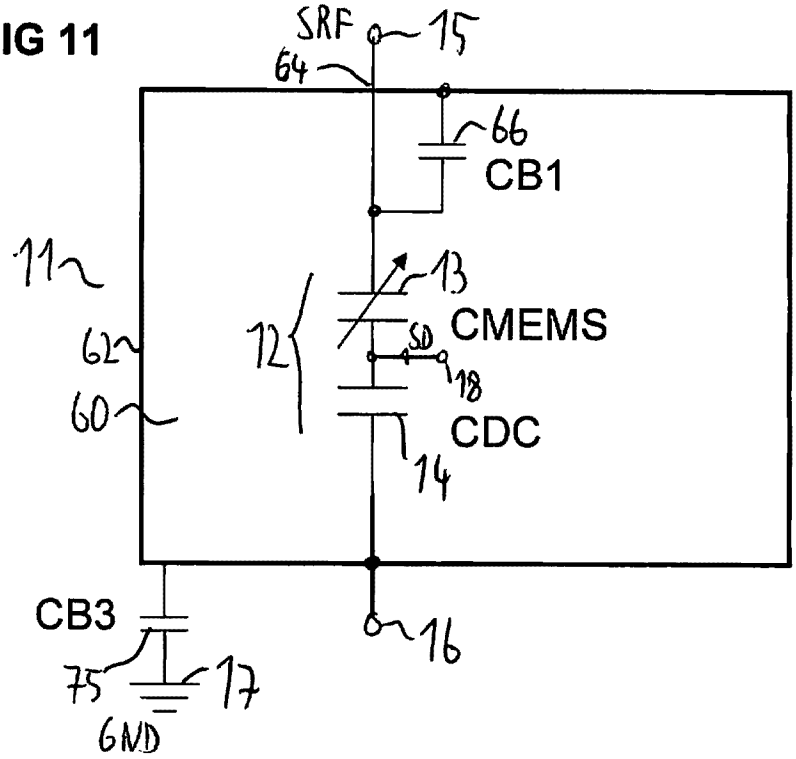
SRF
15
64
66
CB1
11
13
CMEMS
12
SD
18
62
60
CDC
14
CB3
16
75
17
GND

FIG 12

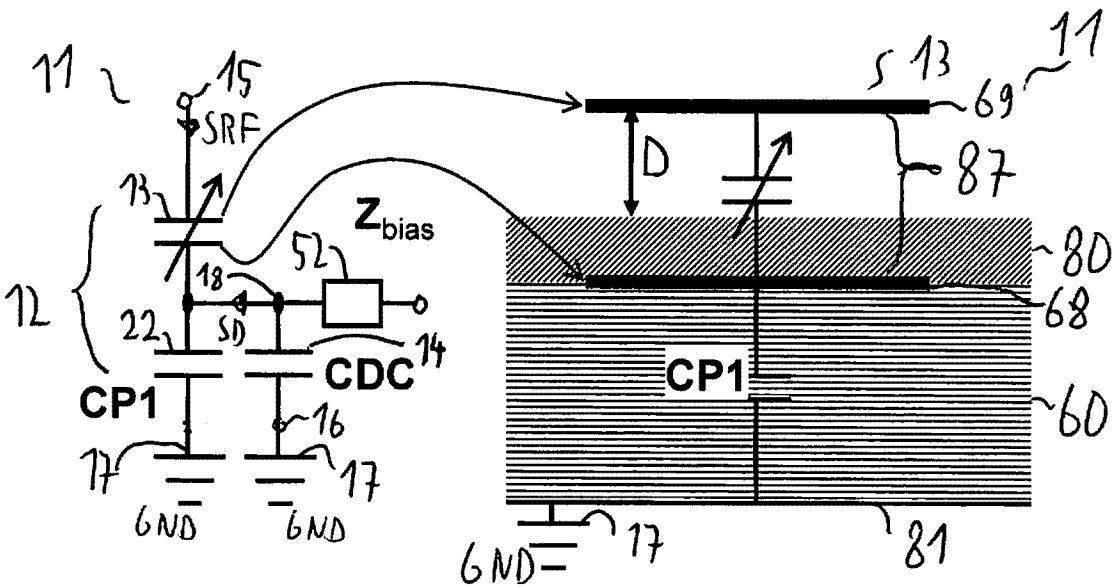
11
15
SRF
13
Z bias
52
18
12
22
SD
14
CDC
CP1
16
17
17
GND
GND
13
11
69
D
87
80
68
CP1
60
17
81
GND

FIG 13

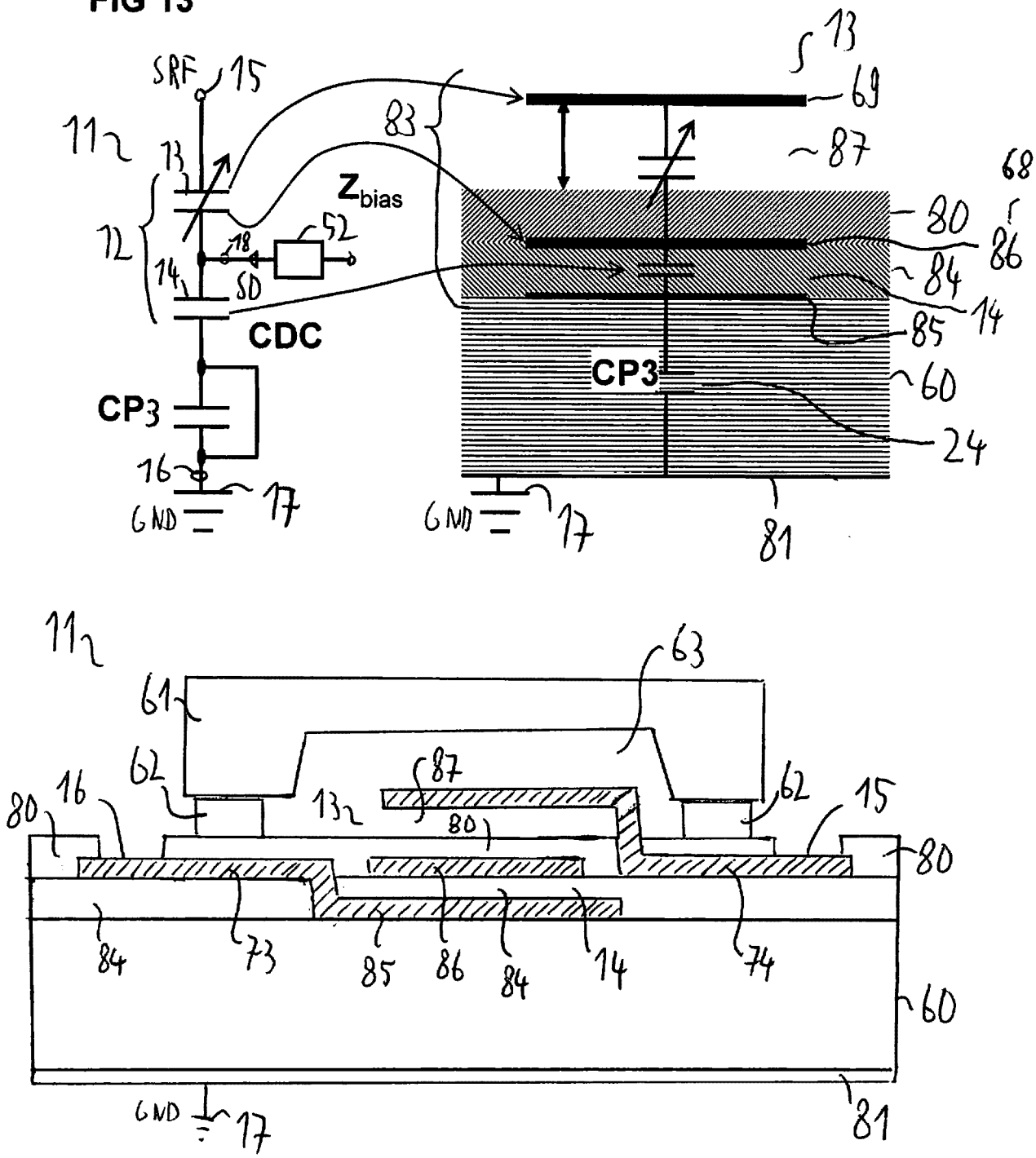
SRF
15
11
13
12
14
18
SD
52
Zbias
CDC
CP3
16
17
GND
83
13
69
87
68
80
86
84
14
85
CP3
60
24
GND
17
81
11
63
61
62
87
13
80
16
62
15
80
80
84
73
85
86
84
14
74
60
GND
17
81

INTERNATIONAL SEARCH REPORT

International application No
PCT/EP2010/070686

A. CLASSIFICATION OF SUBJECT MATTER
INV. B81B7/02 B81B7/04 H01G5/019 H01G5/014
ADD.

According to International Patent Classification (IPC) or to both national classification and IPC

B. FIELDS SEARCHED

Minimum documentation searched (classification system followed by classification symbols)
B81B H01G

Documentation searched other than minimum documentation to the extent that such documents are included in the fields searched

Electronic data base consulted during the international search (name of data base and, where practical, search terms used)
EPO-Internal

C. DOCUMENTS CONSIDERED TO BE RELEVANT

Category*	Citation of document, with indication, where appropriate, of the relevant passages	Relevant to claim No.
X	WO 2010/106484 A1 (NXP BV [NL]; REIMANN KLAUS [NL]; LIU ZIDONG [GB]; STEENEKEN PETER GERA) 23 September 2010 (2010-09-23) cited in the application page 8, line 15 - line 32; figures 2,4A page 9, line 25 - line 26 claim 8	1-10,13, 14
A	US 7 659 150 B1 (MONADGEMI PEZHMAN [US] ET AL) 9 February 2010 (2010-02-09) column 22, line 35 - line 58; figures 9A,9B column 22, line 59 - column 23, line 3; figure 10B	11,12
A	US 2003/020173 A1 (HUFF MICHAEL A [US] ET AL) 30 January 2003 (2003-01-30) the whole document	1-14

☐ Further documents are listed in the continuation of Box C.

☒ See patent family annex.

* Special categories of cited documents :

"A" document defining the general state of the art which is not considered to be of particular relevance

"E" earlier document but published on or after the international filing date

"L" document which may throw doubts on priority claim(s) or which is cited to establish the publication date of another citation or other special reason (as specified)

"O" document referring to an oral disclosure, use, exhibition or other means

"P" document published prior to the international filing date but later than the priority date claimed

"T" later document published after the international filing date or priority date and not in conflict with the application but cited to understand the principle or theory underlying the invention

"X" document of particular relevance; the claimed invention cannot be considered novel or cannot be considered to involve an inventive step when the document is taken alone

"Y" document of particular relevance; the claimed invention cannot be considered to involve an inventive step when the document is combined with one or more other such documents, such combination being obvious to a person skilled in the art.

"&" document member of the same patent family

Date of the actual completion of the international search	Date of mailing of the international search report
27 September 2011	06/10/2011

Name and mailing address of the ISA/	Authorized officer
European Patent Office, P.B. 5818 Patentlaan 2 NL - 2280 HV Rijswijk Tel. (+31-70) 340-2040, Fax: (+31-70) 340-3016	Peeters, Mark

INTERNATIONAL SEARCH REPORT

Information on patent family members

International application No
PCT/EP2010/070686

Patent document cited in search report	Publication date	Patent family member(s)	Publication date
WO 2010106484 A1	23-09-2010	NONE	
US 7659150 B1	09-02-2010	NONE	
US 2003020173 A1	30-01-2003	US 2005167047 A1	04-08-2005
		US 2004262645 A1	30-12-2004