2 Sheets—Sheet 1.

W. R. JONES.

MACHINES FOR SAWING METAL-BARS.

No. 193,963. Patented Aug. 7, 1877.

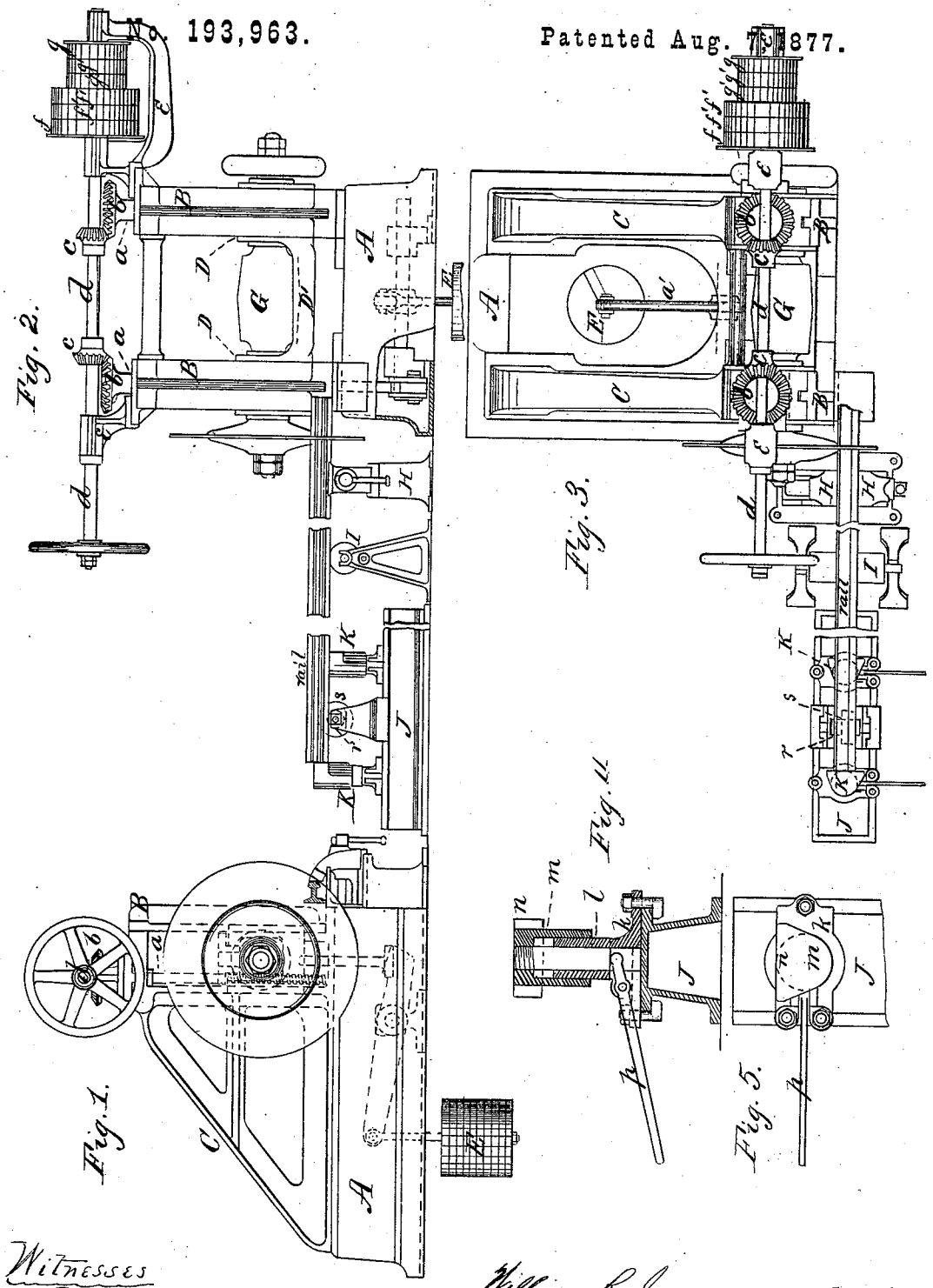

Witnesses
F. A. Pattock,
G. Smith

William R. Jones, Inventor
by Connolly Bowe & McTighe
Attorneys

N. PETERS, PHOTO-LITHOGRAPHER, WASHINGTON, D. C.

2 Sheets—Sheet 2.

W. R. JONES.

MACHINES FOR SAWING METAL-BARS.

No. 193,963. Patented Aug. 7, 1877.

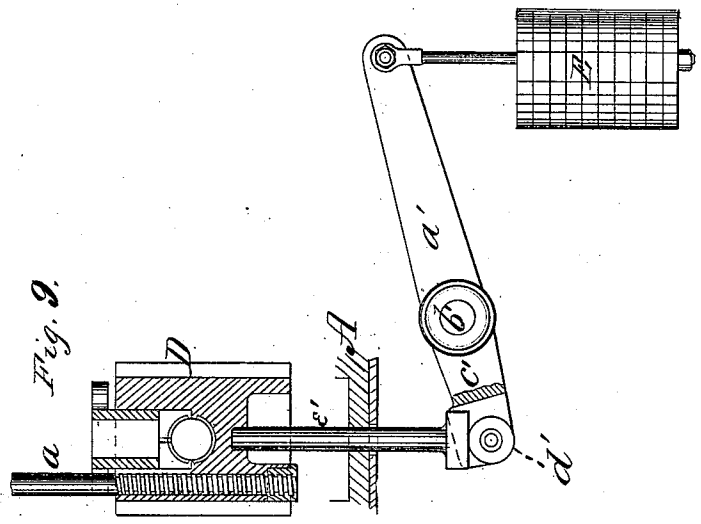

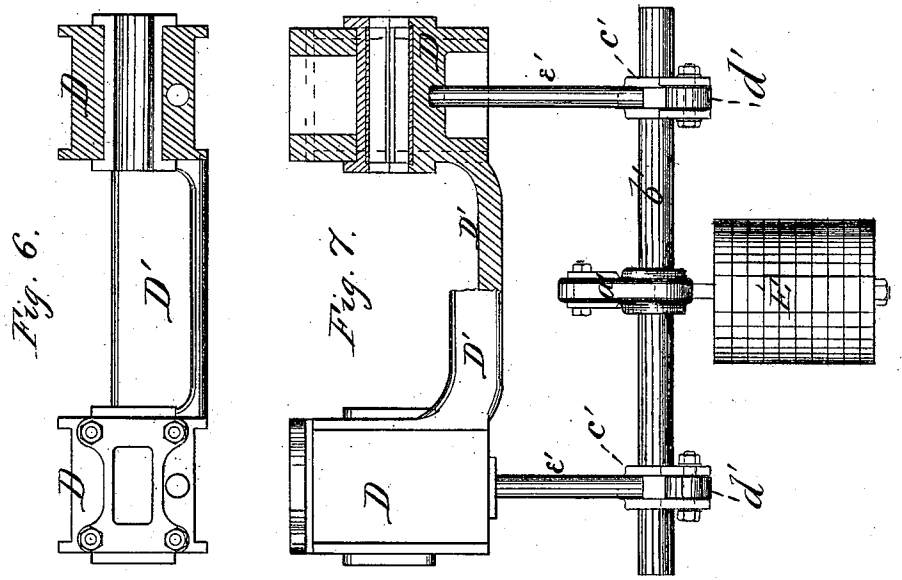

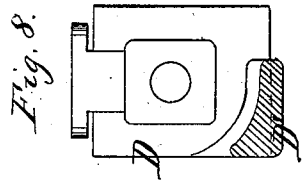

Witnesses.
F. A. Pollock
G. Smith

William R. Jones Inventor.
by Connolly Bovard McTighe
Attorneys.

N. PETERS, PHOTO-LITHOGRAPHER, WASHINGTON, D. C.

UNITED STATES PATENT OFFICE.

WILLIAM R. JONES, OF BRADDOCK'S, PENNSYLVANIA.

IMPROVEMENT IN MACHINES FOR SAWING METAL BARS.

Specification forming part of Letters Patent No. **193,963**, dated August 7, 1877; application filed May 9, 1877.

To all whom it may concern:

Be it known that I, WILLIAM R. JONES, of Braddock's, in the county of Allegheny and State of Pennsylvania, have invented certain new and useful Improvements in Cold-Saw Machines; and I do hereby declare the following to be a full, clear, and exact description of the invention, such as will enable others skilled in the art to which it pertains to make and use it, reference being had to the accompanying drawings, which form part of this specification, in which—

Figure 1 is an end elevation. Fig. 2 is a front elevation. Fig. 3 is a plan view. Figs. 4 and 5 are, respectively, section and plan of the rail-gaging jacks. Figs. 6, 7, 8, and 9 are details, showing arrangement of the coupled boxes and counterbalance.

This invention relates to that class of machines known as "cold-saws," in which a smooth disk of soft iron running at a high rate of speed is used to cut through rails or bars of cold metal; and has for its especial object the cutting of Bessemer-steel rails.

My invention consists in the novel construction, combination, and arrangement of parts, as hereinafter described and claimed.

In the drawing, A designates a massive bed, strongly bound to a heavy foundation; and on this bed are firmly fixed vertical housings B, supported by the webs or braces C, rising from the bed or integral with the housings. In the housings are two journal-boxes, D, constructed in any of the usual approved forms, and connected rigidly together by a heavy arch or cross-bar, D′, the boxes and cross-bar being preferably cast in one piece, the cross-bar being arched, so as to make room for the arbor and its pulley. The arbor is journaled in both boxes, the saw being outside the housings and its pulley G between them. Passing down through the top plates of the housings, and through or into the boxes threaded for the purpose, are two screws, *a*, and on these, at their upper ends, are keyed the beveled gears *b*. Beveled gears *c* mesh with these, and are fixed on a horizontal shaft, *d*, which is journaled in brackets *e* extending from the top plates. On this shaft are fixed and loose pulleys of different diameters.

Motion being given the saw-pulley G and the fixed pulley *f*, the saw revolves, and at the same time the screws *a* are operated, thus forcing the boxes D steadily downward. When the saw has done its work, the feed-belt is thrown off pulley *f* to its loose pulley *f′*, and a crossed belt is shifted from loose pulley *g′* to fixed pulley *g*, smaller than *f*, and thus the movement of the journal-boxes is reversed, and the velocity increased, in order that no time shall be lost in making ready for another cut.

To assist in the steady withdrawal of the saw, and further guard against any tendency to jar or stick on the part of the screws *a* or boxes D in either upward or downward movement, I provide an independent counterbalance, E. Its weight is utilized by means of a lever, *a′*, attached to a rock-shaft, *b′*, cranks *c′* of which, furnished with anti-friction wheels *d′*, bear upward on the base of two similar lifting-rods, *e′*, which support the boxes D.

A powerful vise, H, is arranged, as shown, in such position that it gripes and supports the rail at the exact point where the resistance is the greatest, viz., near the periphery of the saw.

In the manufacture of rails a small percentage of the finished rails, when cut to length, are found, after cooling, to be more or less defective for a few inches at one or both ends. If sold in this condition, they must be sold as second-class at a reduced price, but rather than suffer the loss consequent therefrom, producers prefer to cut off the defective ends and sell the rails as first-class "short-lengths," in which condition they are marketable at a fair price. In the case of steel rails this cutting has been done in but one way, viz., by indenting the rail with a cold-chisel and then breaking it off. It has been attempted by cold-sawing, but the attempts have not proved sufficiently successful to merit general use. Now, when a defective rail is cut, it must conform to one of the standard sizes of short-lengths, which vary from twenty-two to twenty-eight feet, and as it is a great loss of time to measure off every rail, I attach a gaging mechanism, which at the same time serves as an aid to the clamping of the rail against vibration.

Beside the vise H, a plain roller, I, is placed on suitable supports, to make the handling

easy and support the rail. In line with this and the vise is a long bed-plate, J, upon which are placed a series of jacks, K, the functions of which will be explained, consisting of a base, *k*, attachable by bolts to the bed-plate J, and having a hollow post, *l*, projecting upwardly. This fits the deep annular recess in the sliding head *m*, which is formed with squared face *n* as a stop for the rail end when raised, which is effected by a lever, *p*, the inner end of which lifts the central core of the head *m*, as shown. Several of these jacks K, being arranged on bed J at such distances from the saw that the faces *n* shall determine the various standards for short-lengths, are normally out of the way, as one or more guide-rolls, *r*, are interposed, which have collars *s* bearing up against the web of the rail, and so arranged relatively to roll I that the rail on them all shall be exactly horizontal or at right angles with the saw.

The operation of these is as follows: A rail is pushed along on the rolls *r* and I until its rear end just clears the line of face *n* of the jack which is to determine its length when cut. Then the head of that jack is elevated by the lever till it comes up behind the rail end, after which the latter is pushed back to it, then the other end is clamped in the vise, after which the jack-head may be dropped, and the saw operated to cut. Thus the jacks being all adjusted to the various standards of short-lengths, no delay is encountered in the operation of the saw. The vise and guide-rolls hold the rail in an immovable position, allowing no vibrations, and the saw being likewise absolutely free from all vibration, every part performs its functions steadily and unflinchingly, the rail, in consequence, being neatly and accurately cut—a result which, in the manufacture of Bessemer steel rails, has not hitherto been successfully accomplished.

The saw-arbor being about level with the axis of engine band-wheel, when the saw is fed downward its power increases by the tightening of the belt. This is taken advantage of by so setting the rail that the saw shall first meet the rail-flange, then the web, and lastly the head, which, being the heaviest portion, offers most resistance. However, the housings might be curved concentrically with the fly-wheel shaft, and the boxes constructed accordingly.

Having fully described my invention, I claim—

1. The combination, in a cold-saw machine for cutting iron, of the saw and arbor, the fixed housings, vertically-adjustable coupled journal-boxes, mechanism for adjusting said boxes, and an automatically operating device to rise and fall with said boxes and relieve the adjusting mechanism, substantially as described.

2. The combination of the cold-saw and arbor and the flanged vertically-adjustable bearings or boxes, sliding in the vertically-slotted stationary housings with the supporting mechanism, consisting of the shaft *b'*, arms *c'*, posts *e'*, lever *a'*, and weight E, substantially as set forth.

3. The jack, consisting of the tubular sliding piece *m*, having a square-faced head and a central post, with a stationary tubular base into which said post slides, and a lever, *p*, substantially as described.

4. In combination with the saw and the vise H, one or more guide-rolls, *r*, having collars *s*, adapted to enter the concavity of the rail, substantially as shown.

In testimony that I claim the foregoing I have hereunto set my hand this 25th day of April, 1877.

WILLIAM R. JONES.

Witnesses:

E. V. McCANDLESS,

THOS. J. McTIGHE.