# United States Patent [19]

**Norell**

[11] **3,732,692**

[45] **May 15, 1973**


## [54] ENERGY BEAM GENERATOR


[76] Inventor: **Harold E. Norell,** 9230 B Virginia Avenue, South Gate, Calif. 90280



[22] Filed: **Feb. 5, 1971**

[21] Appl. No.: **113,004**

[52] **U.S. Cl.** .....**60/70,** 60/95, 60/108, 60/102

[51] **Int. Cl.** .....**F01d 13/02,** F01k 21/00

[58] **Field of Search**.....60/1, 106, 107, 108, 60/95, 70; 415/286; 122/35; 165/39



[56] **References Cited**

UNITED STATES PATENTS

| | | | |
|---|---|---|---|
| 1,115,502 | 11/1914 | Carroll et al. | 165/39 |
| 2,101,676 | 12/1937 | Guilhauman | 60/70 |
| 2,150,678 | 3/1939 | Fisher | 165/39 |
| 3,108,938 | 10/1963 | Nettel et al. | 60/73 X |
| 3,271,960 | 9/1966 | Brunner | 60/73 |
| 3,556,204 | 5/1969 | Dehne | 165/39 |
| 1,835,610 | 12/1931 | Page | 122/35 |
| 2,120,909 | 6/1938 | Schmer | 60/95 |
| 2,655,111 | 10/1953 | Schanzlin | 417/286 |
| 2,835,323 | 5/1958 | Booth | 417/286 X |
| 3,069,859 | 12/1962 | Weehvizen | 60/73 |
| 3,451,220 | 6/1969 | Buscemi | 60/105 X |
| 3,460,518 | 8/1969 | Kemmetmueller | 122/35 X |
| 3,495,406 | 2/1970 | Donatelli et al. | 60/1 X |

FOREIGN PATENTS OR APPLICATIONS

| | | | |
|---|---|---|---|
| 428,365 | 5/1935 | Great Britain | 60/70 |



*Primary Examiner*—Martin P. Schwadron
*Assistant Examiner*—Allen M. Ostrager
*Attorney*—Allan D. Mackabee



[57] **ABSTRACT**

A power plant, particularly adaptable for vehicles including a closed recirculatory system for a liquid such as water, convertible to a heated pressurized vapor, such as steam, wherein the liquid is vaporized by a light beam heat generator, such as a group of lasers or masers, which are directed against a vaporizing chamber to produce steam without contaminating the atmosphere with products of combustion which result from the burning of fuels, such as gases and liquids.


**2 Claims, 3 Drawing Figures**

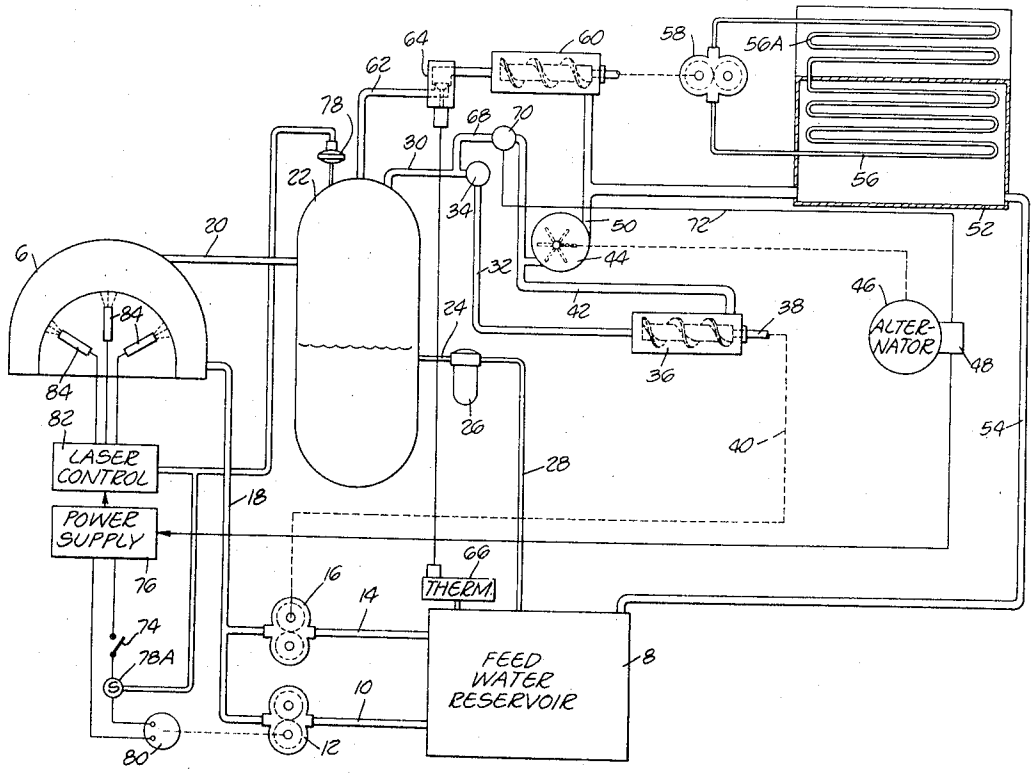

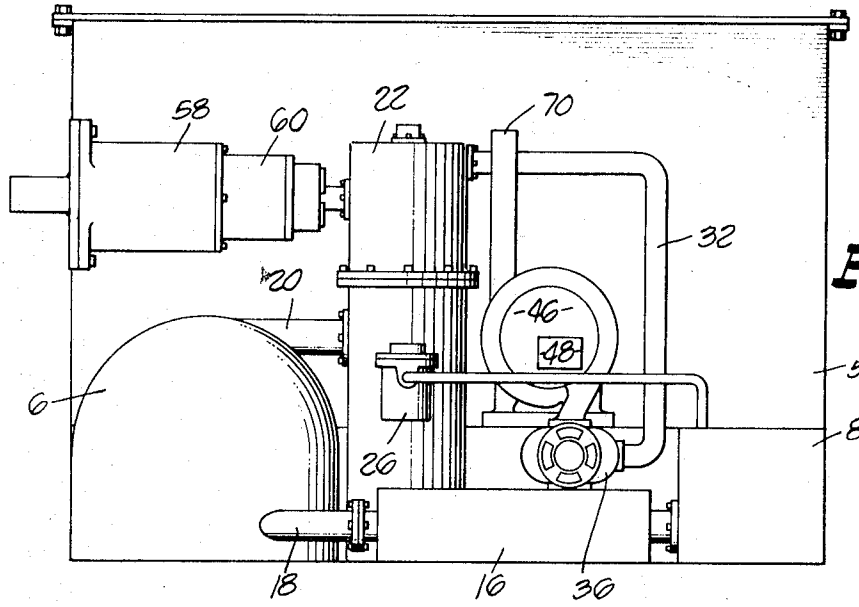


FIG. 1.

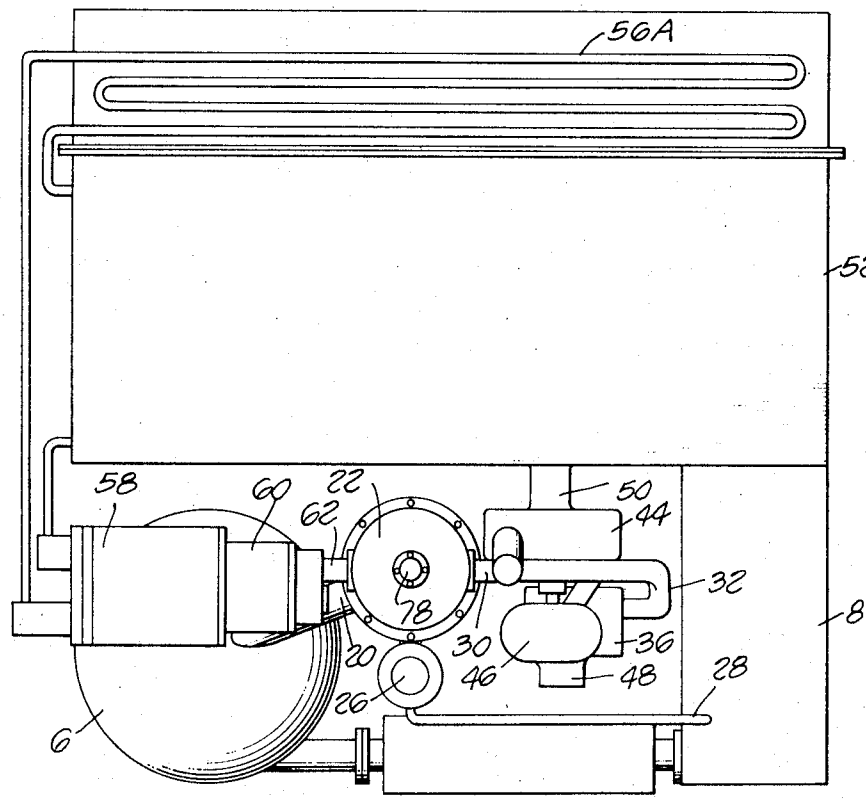


FIG. 2.

INVENTOR
HAROLD E. NORELL

BY

ATTORNEY

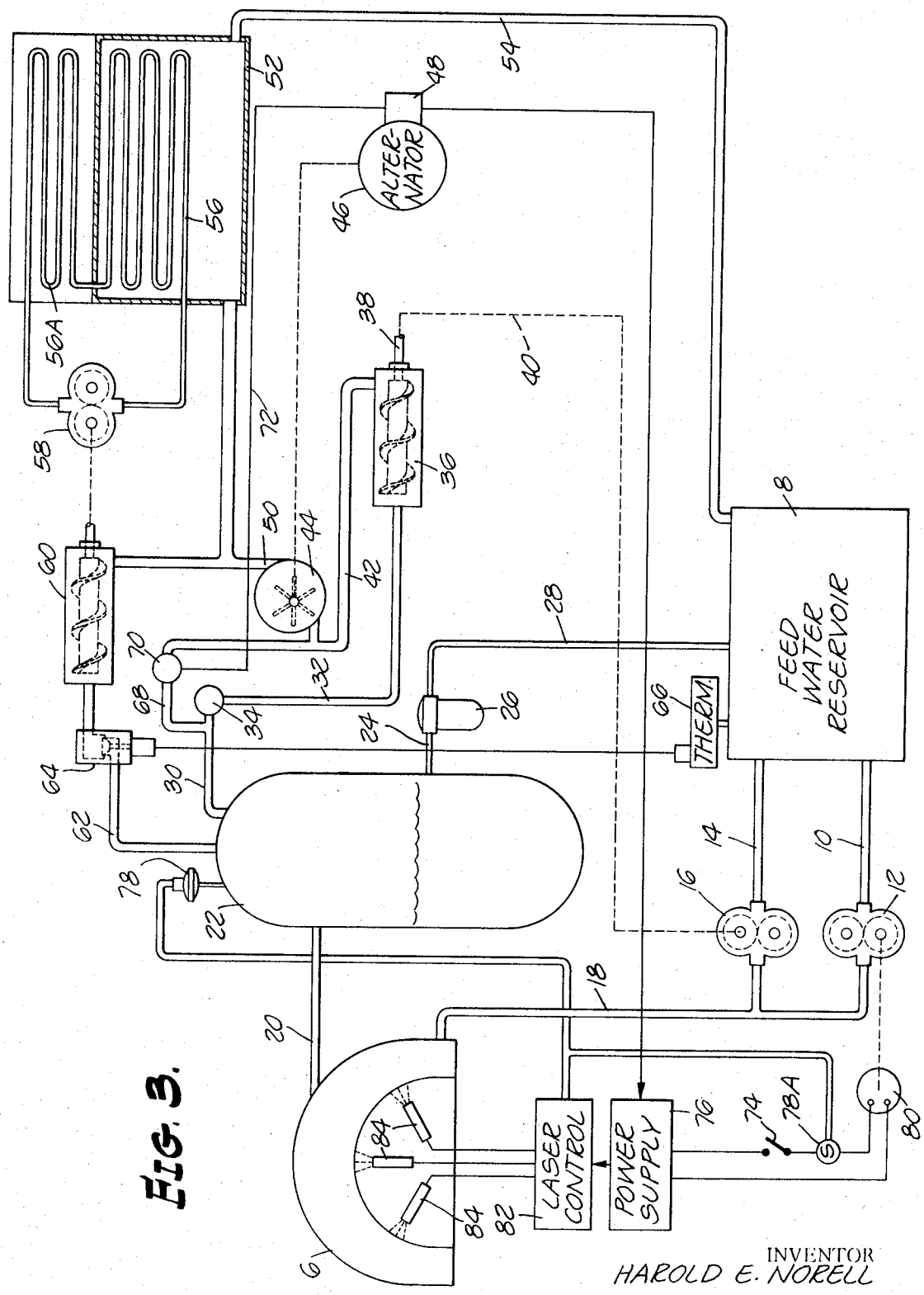


FIG. 3.

INVENTOR
HAROLD E. NORELL

BY

ATTORNEY

# ENERGY BEAM GENERATOR

This invention relates to a power plant utilizing a closed circulatory system for a pressurized vapor, such as steam, wherein the steam is used to produce work, is condensed and recirculated to a vaporizing chamber where it is again converted to steam.

It is a general object of the invention to provide a power plant wherein heating of the liquid to a pressurized vapor is accomplished with lasers or masers, devices which do not contaminate the atmosphere with products of combustion, as do gasoline fueled internal combustion engines or any external combustion engines wherein hydrocarbon fuels and the like are burned and exhaust to atmosphere. Laser or maser heaters can be quite compact and their heating efficiency is such that the vaporizing chamber or steam chamber can be made small enough to be utilized within the reasonable limits afforded by conventional motor vehicles.

Power to actuate these heat producing units is derived from a power supply, such as batteries or fuel cells, the power supply being replenished by a generating device, such as an alternator, which is driven by a low pressure steam turbine using the exhaust from a larger and main work-producing turbine, the latter being used to drive the wheels of a vehicle or to do other desired work. The use of the exhaust steam from the primary turbine to drive the electric current generating turbine serves as the first step in condensing the steam in the system before it enters a condensing chamber from which it is returned as a liquid, such as water, and recirculated through a feed water reservoir or storage chamber to the vapor generating means for reconversion to high pressure steam.

Means is provided for continuing the operation of the electric current generator or alternator even though the primary turbine is shut off, a bypass around the generator being provided to furnish a sufficient supply of steam to the generator turbine to insure its operation.

Water from the condensed steam or feed water reservoir is supplied to the vaporizing chamber initially by an electrically operated pump run from the power supply. When the lasers or masers have generated sufficient steam to provide a working pressure in a steam accumulator and sufficient pressure from the accumulator to the primary turbine, a pressure responsive switch associated with the accumulator will disconnect the electrically driven pump and feed water will be pumped to the vaporizing chamber by a second pump mechanically operated by the primary turbine.

The condensed water in the feed water reservoir and the return line to the vaporizing chamber preferably is kept elevated, preferably just below the boiling point, to avoid unnecessary heat loss and maintain the vaporizing efficiency of the lasers or masers and the vaporizing chamber. This is accomplished by a pressure responsive laser control sensitive to pressures in the high pressure steam accumulator, and also by a thermostat reactive to temperatures in the feed water reservoir and functioning to operate a valve supplying steam to another turbine which drives the pump arranged to pump a coolant, such as a liquid gas, through the condensing chamber, at variations in the speed of the pump turbine resulting in increases or decreases in the heat absorption of the refrigerant as it flows through the condensing chamber.



The above and other objects will more fully appear from the following description in connection with the accompanying drawing:

FIG. **1** is a side elevational view of an embodiment of the invention;

FIG. **2** is a plan view thereof;

FIG. **3** is a more or less schematic view of the device.

In the drawings there is shown a vaporizing chamber **6** which as shown in FIG. **3**, is preferably in the form of a hollow dome to which water is fed from a reservoir **8** through a conduit **10** and electrically driven pump **12**, or through a conduit **14** under the influence of a mechanically driven pump **16** to a common water supply conduit **18** connected to the interior of vaporizing chamber **6**.

The vaporizing chamber **6** has an outlet **20** which supplies pressurized steam to the interior of a steam accumulator **22**. The accumulator is connected by a conduit **24** to a steam trap water level regulator **26** which functions to limit the amount of water which can collect in the accumulator **22** and which will feed excess water through a conduit **28** to the feed water reservoir **8**.

The accumulator **22** has an outlet conduit **30** which is connected to a primary turbine inlet conduit **32** through a control valve **34**, the inlet conduit **32** being connected to a primary turbine **36**. This turbine is preferably a worm turbine, such as manufactured by Sullair of Sweden and Nyakawa of Japan, and when supplied with high pressure steam, will produce a very high torque. Turbine **36** is shown with a power takeoff shaft **38** which can be used to drive a vehicle or some other type of equipment. The broken line **40** indicates that the feed water pump **16** is driven mechanically from the power takeoff shaft **38** of the primary turbine **36**.

The primary turbine **36** has an exhaust conduit **42** which serves as a steam inlet for a secondary turbine **44** which is connected to and drives a current generating device, such as an alternator **46** having the customary regulator **48**. The secondary turbine **44** has an outlet **50** which conducts exhaust steam to the interior of a condensing chamber **52**, the latter having a condensate return pipe **54** through which condensate is fed back to the feed water reservoir **8**.

The condensing chamber **52** is shown supplied with cooling coils **56** through which a refrigerant, such as liquid gas, is pumped by a pump **58** driven by a pump turbine **60**, driven by pressurized steam supplied through a conduit **62** having a control valve **64** therein. The feed water reservoir is equipped with a thermostat **66** which is connected to and controls the operation of the valve **64**. It is greatly preferred that the temperature of the condensate or water in the feed water reservoir **8** be kept just under the boiling point so that it is preheated before it is pumped to the vaporizing chamber **6**, but is kept in a liquid condition so that it can be fed to the vaporizing chamber by either the pumps **12** or **16**, the operation of which will be explained herebelow.

In order to maintain the desired feed water reservoir temperature, if the temperature drops, the thermostat **66** will cause the valve **64** to move toward a closed position, cutting down the speed of the auxiliary or pump turbine **60** and the pump **58** so that cooling liquid will be pumped through the cooling coils **56** at a reduced rate and in so doing, will remove less heat from the condensing chamber **52**. Parenthetically, it should be noted that the coils **56** have portions **56A** thereof

which lie outside of the condensing chamber **52** so that the cooling liquid in the coils will release the heat absorbed by it in the condensing chamber to the atmosphere. Of course, if the temperature in the feed water reservoir **8** rises beyond a desired limit, the thermostat **66** will cause the valve **64** to open wider, thereby increasing the speed of the turbine **60**, the pump **58** and the flow of refrigerant through the coils **56,56A** thereby effecting more cooling of the vapors and condensate in the condensing chamber **52.**

Means is provided for maintaining operation of the current generating alternator **46** when the primary turbine **36** is not in operation. A bypass around the primary turbine **36** to permit independent operation of the secondary alternator turbine **44** is provided by a conduit **68** which is provided with a control valve **70** and is connected with the primary turbine exhaust conduit **42** is also the inlet for the secondary turbine **44.** When primary turbine valve **34** is closed to stop the primary turbine **36,** the secondary turbine **44** and the alternator **46** will reduce in speed and this reduction in speed will of course cause a reduction in generated electricity which will cause the alternator regulator **48** to react. The regulator is connected by a cable **72** to the bypass valve **70** which is electrically operated, causing said valve to open. The valve **70** provides a reduced flow of steam through the secondary turbine **44** so that the alternator will not operate at as great a speed as that provided when the primary turbine **36** is in operation and a greater supply of steam is supplied to the secondary turbine **44.** Consequently, the alternator regulator **48** will keep the bypass valve **70** in an open position until the primary turbine valve **34** is open and the primary turbine attains its normal speed of rotation whereupon the secondary turbine **44** and alternator **46** will attain their normal speeds and the regulator **48** will close the valve **70.**

In order to operate the engine there must of course be a head of steam in the steam accumulator **22** which is supplied by vaporization of water in the vaporizing chamber **6.** To produce this initial steam pressure, a switch **74** in the line from a power supply **76** is closed. A pressure responsive device **78** responsive to pressures in the steam accumulator **22** will close a switch **78A** and will open it only after pressures have built up in the accumulator **22.** With switch **78A** closed, a motor **80** connected to the feed water pump **12** will operate said pump to furnish feed water through the conduits **10** and **18** to the vaporizing chamber **6.** At the same time, the reduced pressure in the accumulator **22** will cause the pressure responsive device **78** to actuate the laser control **82** to energize lasers **84** to heat the vaporizing chamber **6** and vaporize the water fed thereto.

After steam pressures have been generated in the vaporizing chamber **6** and the accumulator **22** and the primary turbine control valve **34** opened to operate said primary turbine **36,** the mechanically driven feed water pump **16** will be actuated through its mechanical drive connection **40** with the primary turbine power takeoff **38.** At this time the electrically driven feed water pump **12** can be stopped by opening the switch **74,** or by some automatic means if desired.

From the foregoing it will be seen that I have provided a closed circuit steam system wherein nothing is vented to atmosphere from said system, and wherein heat for vaporization is obtained by the use of lasers or masers which do not contribute atmosphere contaminating products of combustion as do conventional internal combustion engines or external combustion engines utilizing hydrocarbon fuels and the like.

The lasers or comparable devices are controlled according to the need for pressurized steam, the self-contained power supply is replenished when the primary turbine is in operation and also when it is idle by means of a bypass around the primary turbine and continued operation of the secondary or alternator turbine with pressurized steam from the steam accumulator. The rate of condensation of spent vapor and the resulting temperature of the condensate are controlled in response to the temperature in the feed water reservoir which receives the condensate so that the feed water is in a sense preheated before being pumped to the vaporizing chamber, but the heat thereof maintained at a maximum below the boiling point of water so that it can be handled by the feed water pumps.

In order to provide a power plant which will operate over long periods of time without requiring servicing, it is preferred that the liquid to be vaporized comprise water which has been purified to remove minerals and chemicals therefrom and thereby substantially eliminate deposits on the interiors of the various chambers and conduits making up the system. The use of water is preferred because of the very high degree of expansion which occurs when it is converted into steam so that a high degree of pressure can be achieved therewith.

As brought out above, it is highly desirable to utilize at least the primary turbine in the form of a worm turbine, such as that mentioned above, which will operate quite efficiently with high pressure steam and produce high torque which of course means high horsepower.

It will of course be understood that various changes can be made in the form, details, arrangement and proportions of the various parts without departing from the spirit of the invention.

I claim:

**1.** A power plant substantially free of atmospheric contaminants including a closed recirculatory system for a liquid convertible to a heated pressurized vapor; turbine means in said system and operable by pressurized vapor to perform mechanical work; condensing means for the vapor after it leaves the turbine means; a vaporizing chamber for the liquid, wherein the improvement comprises: a light beam heat generator in heat transfer association with and focused upon said vaporizing chamber; said condensing means including a condensing chamber; a feed liquid reservoir for liquid to be vaporized; a second and independent closed circulatory system for cooling fluid having a portion thereof located in said condensing chamber; pump means in said second closed system for circulating cooling fluid therein and through said condensing chamber; means responsive to temperature of the liquid in said feed liquid reservoir for varying the pumping rate of said pump means in said second closed system, to maintain the temperature of said vaporizable liquid in said reservoir, and a self-contained electrical power supply; an alternator having a regulator and having an output lead to said electrical power supply; said turbine means including a primary work-producing turbine being free of driving connection with said alternator and having an inlet for pressurized vapor; a valve in said turbine inlet; a secondary turbine drivingly connected to said alternator and having an inlet for pres-

surized vapor; a valve in said secondary turbine inlet; said primary turbine having an outlet connected to said secondary turbine inlet between said secondary valve and said secondary turbine; and a valve operating connection between said alternator regulator and said secondary valve to open said secondary valve and provide pressurized vapor to said secondary turbine when the valve to said primary turbine is closed and the output of said alternator is reduced.

2. The structure in claim 1, and an electrically driven pump in said closed system between said condensing means and said vaporizing chamber, a mechanically driven pump in said closed system between said condensing means and said vaporizing chamber and bypassing said electrically driven pump, and a pressure responsive electrical pump control in said closed system and operable under a predetermined pressure in said system to shut off operation of said electrically driven pump.

* * * * *