Sheet 1.
3 Sheets.

M. A. Johnson.

Felting Machine.

No. 14815 Patented May 6, 1856.

Fig. 1.

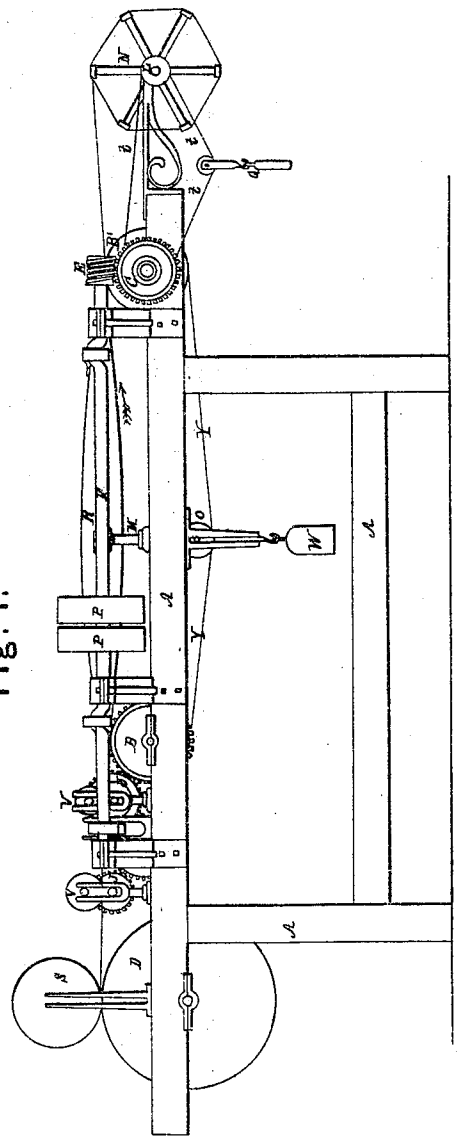

Fig. 2.

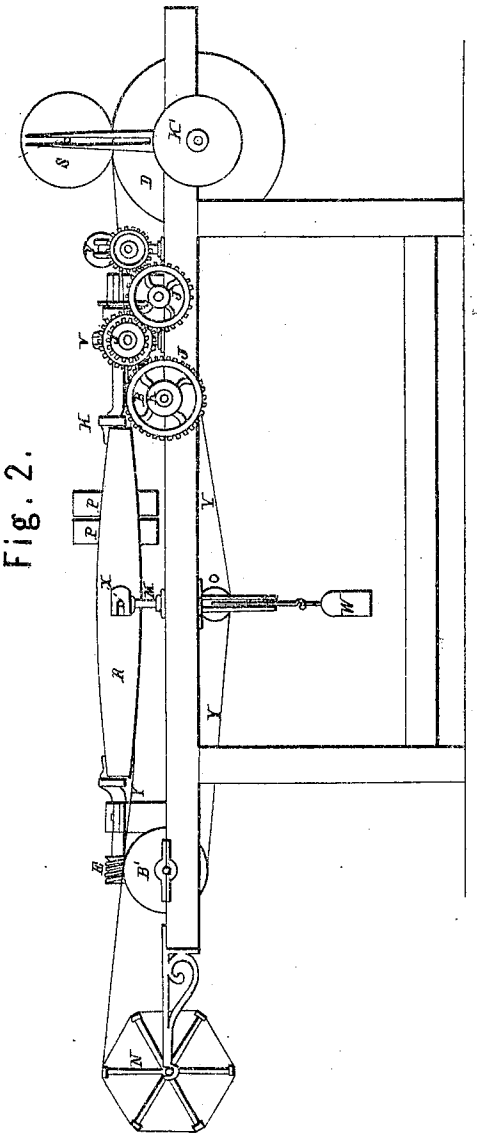

Sheet 2.
3 Sheets.

M. A. Johnson.

Felting Machine.

No. 14815 Patented May 6, 1856.

Fig. 5.

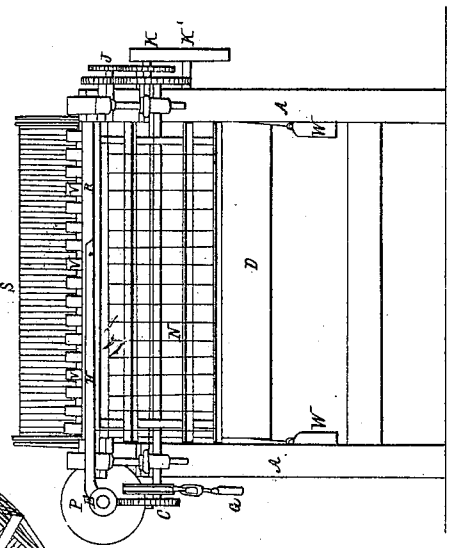

Fig. 3.

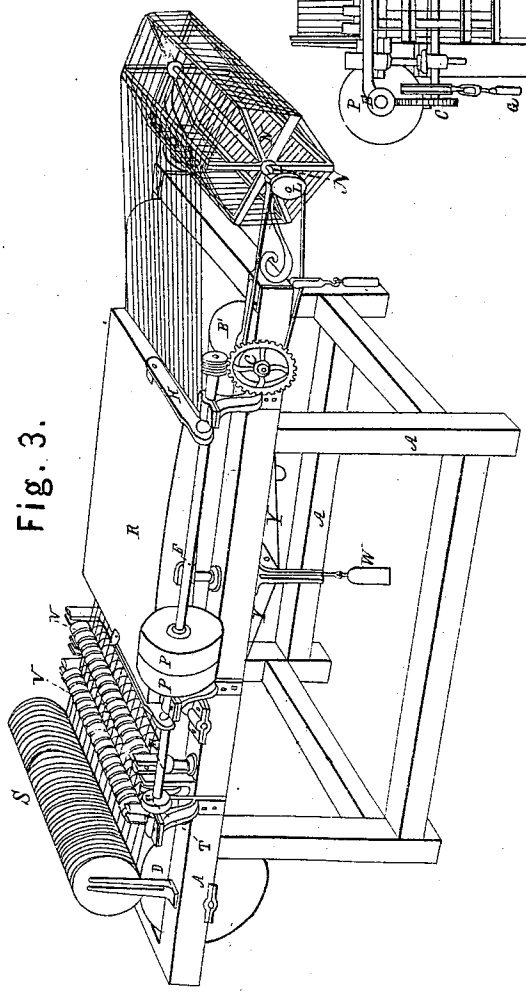

Fig. 4.

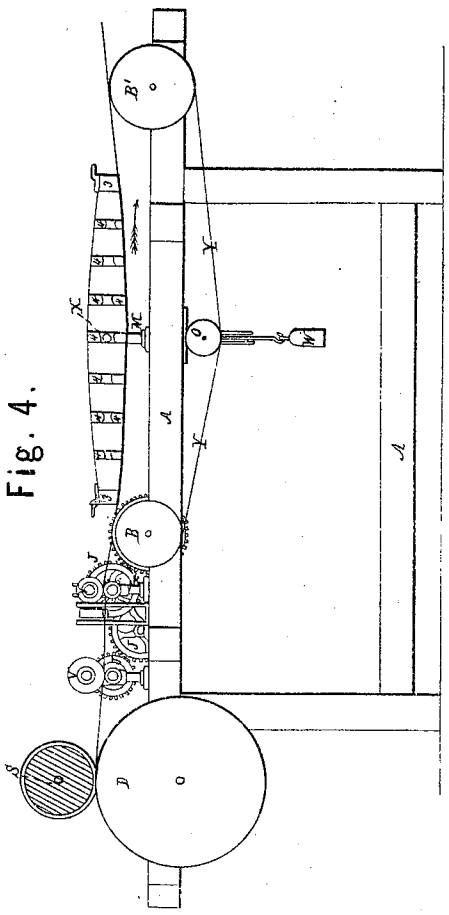

Sheet 3.
3 Sheets.

M. A. Johnson.

Felling Machine.

No. 14815 Patented May 6, 1856.

Fig. 6.

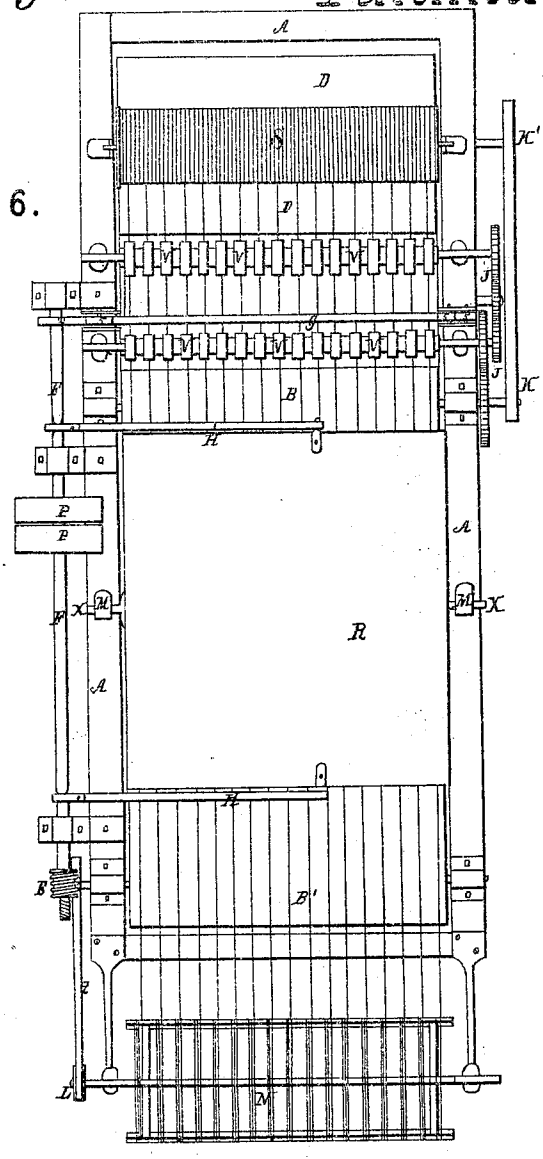

Fig. 7.



Fig. 8.

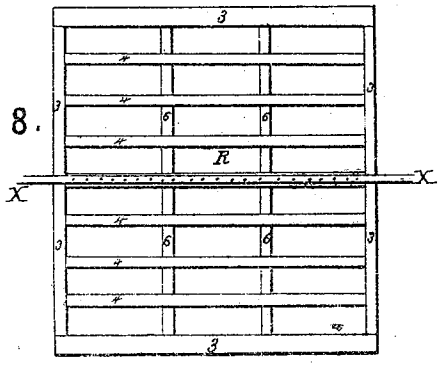

UNITED STATES PATENT OFFICE.

MOSES A. JOHNSON, OF LOWELL, MASSACHUSETTS.

MANUFACTURING FELTED YARNS.

Specification of Letters Patent No. 14,815, dated May 6, 1856.

To all whom it may concern:

Be it known that I, MOSES A. JOHNSON, of Lowell, in the county of Middlesex, in the State of Massachusetts, have invented a new and useful Improvement Upon Machines for Making Felted Yarns; and I do hereby declare that the following is a full, clear, and exact description of the construction and operation of the same, reference being had to the annexed drawings, making a part of this specification, in which—

Figures 1 and 2, represent elevations of the two ends. Fig. 3 a perspective view of the machine. Fig. 4, a section of the same taken lengthwise. Fig. 5, a front elevation. Fig. 6, a ground plan. Fig. 7, the twist belt detached. Fig. 8, a section of the steam rubber, the same letters referring to like parts in each.

A A, represents the frame of the machine made of wood or metal; B, the back roller or drum and B′ the front roller over which is stretched the endless apron or band Y, Y.

R is the steam rubber, shown in a vertical section in Fig. 4, and in horizontal section in Fig. 8. This rubber is formed of a wooden frame 3, 3, 3, having intermediate strips of wood running lengthwise between the two sides 4, 4, 4, 4, braced crosswise by suitable pieces 6, 6. The lower surface is curved downward to correspond with the sag of the endless apron. The upper side may be either curved or flat. The lower side is covered with canvas tightly stretched. The upper is covered with very light sheet metal or other material impervious to steam. The lower side may also have sheet metal above the canvas when it is desirable to keep the moisture of the steam away from the apron.

X, X, is the steam pipe connected by suitable means with a boiler and perforated within the rubber, admitting (through the openings in the slats) steam into the whole interior, thereby maintaining it at the proper temperature for felting.

V, V, are drawing rolls of the usual construction, the same as for spinning, being driven by gear wheels J, J, and drawing or stretching the roving according to the degree of fineness required.

g, *g*, is a twist belt similar to that in use on cotton speeders (shown clearly in Figs. 6 and 7), the object of which is to partially neutralize the straightening of the fibers in the drawing, the arrows in Fig. 7, showing the direction of the motion of the two surfaces of the belt between which the yarn is drawn, the pulley T, on the driving shaft F giving the belt motion and the small pulleys 5, 5, 5, (Figs. 6 and 7) guiding it.

D, is a drum at the back of the machine, eighteen or twenty inches in diameter driven by pulleys K, K′, the spool of roving (as formed by the condenser of a carding machine) S, is placed upon this drum from which it receives motion and is gradually unwound.

F, is the driving or crank shaft, upon which are the main pulleys P, P. Upon this shaft are eccentrics or cranks for giving motion to the rubber by means of the intermediate links or connecting rods H H attached to stud pins at the side of the rubber. The motion thus given may vary from half to three quarters of an inch or more. This is the simplest form of gearing, but any equivalent form may be used as well. The screw E upon the driving shaft, with the toothed wheel C, serve to give motion to the drum B′, by which the endless apron of canvas is drawn forward in the direction of the arrows.

N, is a reel for receiving the yarns as they are delivered. This reel is driven by the belt, *t*, running over the pulleys C, L, which belt is provided with a roller and weight G for the purpose of regulating the tension of the belt and preventing the strain upon the yarn; the roller rests upon the lower side of the belt *t*, and a weight proportioned to the strength of the yarn is suspended from it by the forked piece and hook as represented, this weight suffers the belt to slip upon the pulleys when the strain becomes too great for the strength of the yarn.

O, represents a roller resting upon the lower side of the endless apron Y, Y, running crosswise of the same and kept in position by vertical guides attached to the sides of the frame, the guides allowing the roller to rise and fall as desired. W, W, are heavy weights attached to the axis of this roller at either end whereby any required tension may be given to the apron or band, causing it to press more or less tightly against the lower side of the rubber, for the purpose of regulating the action of the latter upon the yarns. The rubber is prevented from rising with the apron and is also kept in line by the guides M, M, attached to the frame. The steam pipe X, is made to pass through

these guides and thus retain the rubber in position without preventing its vibrations (separate guides may however be substituted instead). The main shaft of the machine F, should make about 500 revolutions per minute and the speed of the apron should vary according to amount of felting desired, ranging say from 10 to 20 feet per minute. The red lines in all the figures except Fig. 7, represent the roving and yarns.

Having thus fully described the several parts of the machine, I will now proceed to explain the manner of using the same. The machine having been constructed substantially as above described, the apron Y, is adjusted to the proper tension by attaching the weight W. Steam is then admitted into the rubber a short time before starting and the spool of roving being laid upon the drum D, the several ends are separated as for spinning. Each end is then introduced between the rollers and twist belt and thence entered a short distance under the back edge of the rubber. The machine may now be started. The apron, rolls, &c., carry the yarn forward making it pass beneath the rubber, which, having a motion at right angles to that of the apron and vibrating at a speed of 500 strokes each way has the effect of rolling and effectually felting the roving into a smooth and strong yarn, and it is finally delivered and taken up by the reel N. For heavy yarns, as for carpets, the roving may be made of the proper weight per yard at the carding machine, but for finer yarns the drawing rolls will be generally required. Where the yarns are required to be very even two spools may be placed one behind the other on the drum D, and two or more strands run together through the rolls.

The advantages which I claim for this machine, are, firstly, the general simplicity of its construction, the inexpensive materials required for its construction, the perfectly elastic self adjusting surface of the bed upon which the yarns rest during the operation of felting, and the self-adjusting arrangements for driving the reels.

I do not claim the use of an endless apron, draw rolls, twist belt, reel, or self adjusting belt, each being in itself old and well known, but,

What I do claim as my invention and desire to secure by Letters Patent is—

The arrangement of the steam rubber R in relation to, and in combination with the endless apron Y, Y, constructed and operating substantially in the manner described.

MOSES A. JOHNSON.

Witnesses:
A. A. BLANCHARD,
SAMUEL M. RICHARDSON.