Feb. 8, 1927. 1,616,881

S. I. WHARTON

SHADE ROLLER FIXTURE

Filed April 16, 1926

Fig. 1.

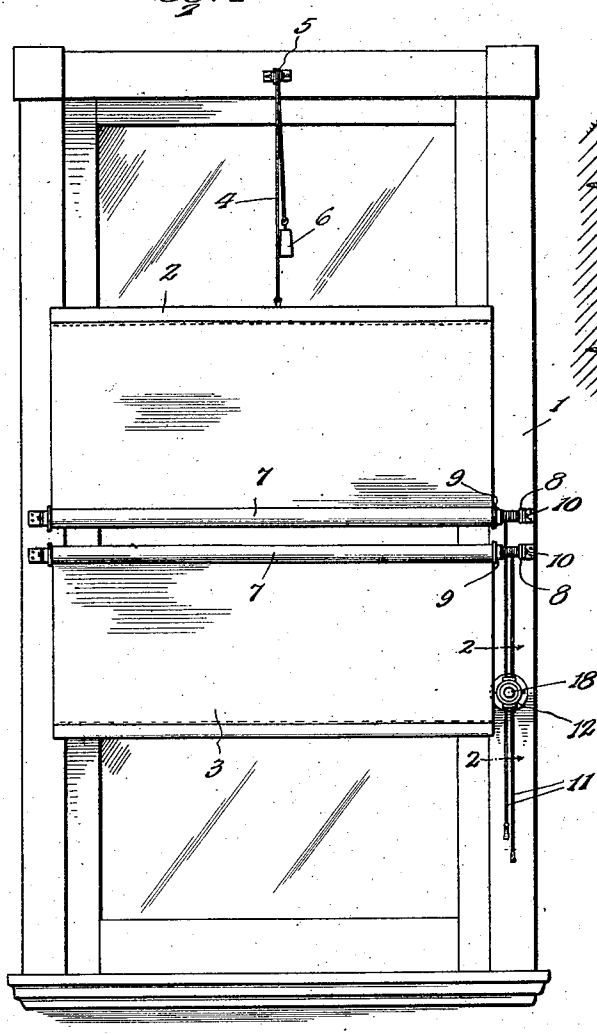

Fig. 2.

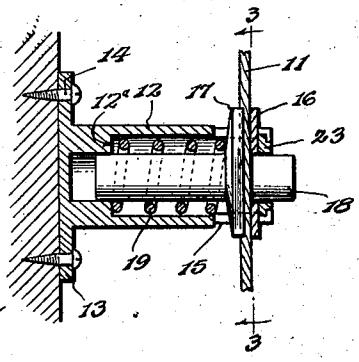

Fig. 3.

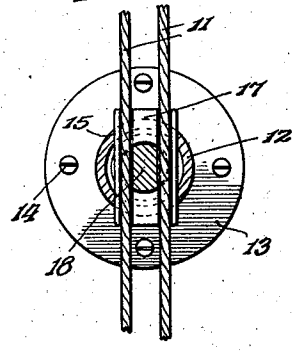

Fig. 4.

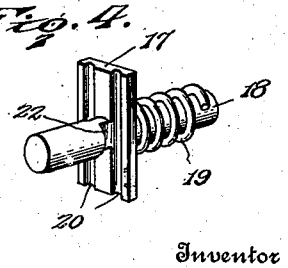

Fig. 5.

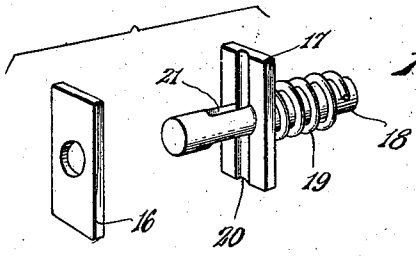

Inventor

S. I. Wharton.

By Lacey & Lacey. Attorneys

Patented Feb. 8, 1927. 1,616,881

UNITED STATES PATENT OFFICE.

SIDNEY I. WHARTON, OF BURKBURNETT, TEXAS, ASSIGNOR OF ONE-HALF TO D. R. PEEVEY, OF WICHITA COUNTY, TEXAS.

SHADE-ROLLER FIXTURE.

Application filed April 16, 1926. Serial No. 102,531.

The invention provides for the ready and convenient operation of a shade to allow for ventilation and the admission of light as desired, the shade being moved in one direction by gravity and in the opposite direction by the unwinding of a cord from a spool, retaining means being associated with the said cord to hold it and the shade in the required adjusted position. The retaining means is operable by pressure to release the cord and is actuated by a spring to automatically grip and hold the cord which passes between cooperating jaws.

While the drawings illustrate a preferred embodiment of the invention it is to be understood that in adapting the means to meet specific needs and requirements, the design may be varied and such other changes in the minor details of construction may be resorted to within the scope of the invention as claimed, without departing from the spirit thereof.

For a full understanding of the invention and the merits, thereof, reference is to be had to the following description and the drawings hereto attached, in which,—

Figure 1 is an elevational view of a window provided with upper and lower shades, including control means embodying the invention,

Figure 2 is an enlarged sectional view on the line 2—2 of Figure 1, of the retaining means for holding the shade roller operating cord in the required adjusted position,

Figure 3 is a sectional view on the line 3—3 of Figure 2, looking in the direction of the arrows,

Figure 4 is a detail perspective view of the cord holding jaw and the cooperating plunger and spring, and

Figure 5 is a detail view in perspective of a modification adapted for a single shade.

Corresponding and like parts are referred to in the following description and designated in the several views of the drawings by like reference characters.

The numeral 1 designates the frame or casement, of a window which, in the present instance, has associated therewith an upper shade 2 and a lower shade 3. A cord 4 is connected at one end to the reinforced end of the upper shade 2 and passes over a guide pulley 5 at the top of the window frame or casement 1 and has a weight 6 attached to its lower end, said weight serving to normally raise the shade 2 when the latter is released from the restraining means.

Each of the shade-rollers 7 is provided at one end with a spool or drum 8 and a flange 9 to prevent interference of the shade with the operating cord. The spool 8 may form a part of the shade roller or be separate therefrom and attached thereto in any determinate way. When formed separate from the shade roller, the spool may consist of a casting which is secured to the roller by the flange or head at one end and which is provided at its opposite end with a journal 10, for pivotally supporting the roller in the accustomed way. An operating cord 11 is associated with each of the spools 8 and is connected at one end thereto, the opposite end extending within convenient reach and having a knot formed therein or a button applied thereto to form a stop and grip. The operating cord 11 is wound upon the spool 8 in an opposite direction to the winding of the shade upon its roller. When the shade is wound upon its roller the operating cord 11 is unwound from the spool 8 and when the shade is unwound from the roller, the operating cord is wound upon the spool or drum. The shade is held in the required adjusted position by means of the mechanism shown most clearly in Figure 2.

The retaining means for gripping or holding the operating cord 11 comprises a casing 12 which is closed at one end and open at the other end. The closed end is supplied with an outer flange 13 in which are formed openings to receive screws or fastenings 14, by means of which the device is secured to the window frame or casement. Opposite sides of the casing 12 are cut away, as indicated at 15, to receive the projecting ends of jaws 16 and 17, between which the operating cord 11 is adapted to be gripped. A plunger 18 has a loose fit in the casing 12 and projects through an opening in the outer closed end thereof to admit of pressure being exerted thereon to effect a release of the cord 11. The jaws 16 and 17 are mounted upon the plunger 18, the jaw 17 being fast thereto and the jaw 16 loose. An open coil spring 19 mounted upon the plunger 18 normally urges the same forwardly whereby to grip the cord 11 between the jaws. The spring 19 is

confined between the fixed jaw 17 and an inner shoulder 12^a of the casing. Grooves 20 are formed in the gripping face of the jaw 17 to receive the operating cords 11 of the shades 2 and 3. Opposite sides of the plunger are notched adjacent the jaw 17, as indicated at 22, to receive the operating cords. The slots formed by the cut away portions 15 extend through the end of the casing to admit of the jaws being placed in position. A plate 23 closes the outer end of the casing 12 and is set in a rabbet and retained in place by upsetting the projecting end of the casing. Forward movement of the plunger 18 is limited by the closed end of the casing 12 and when pressure is exerted upon the projecting end of the plunger the jaw 17 is moved rearwardly, thereby releasing the cords 11 which are free to move to admit of the desired adjustment of the shades. When the operating cord 11 associated with the upper shade 2 is released said shade is raised by the weight 6. The upper shade 2 may be lowered by pulling upon the lower end of the operating cord 11 associated therewith. This unwinds the cord from the spool and winds the shade 2 upon the roller, the projecting end portion of the shade being held extended by the weight 6 and cord 4 in a manner well understood. When the cord 11 associated with the lower shade 3 is released said shade automatically lowers by reason of its lower weighted end gravitating. The shade 3 may be raised by pulling upon the cord 11 associated therewith, whereby said cord is unwound from the spool 8 and the shade 3 wound upon the roller to which the spool is connected. In the event of one shade only being employed the operating cord coacting therewith is gripped between the jaws 16 and 17, the latter being provided with a single groove 20, as shown in Figure 5, and the plunger 18 having a slot 21 for the cord to pass through. The plunger and jaws shown in Figure 5 will be mounted in a case substantially as shown in Figure 2 and the operation is the same as herein indicated.

Having thus described the invention, I claim:

1. A cord holder of the character specified, comprising a casing, a plunger therein, jaws carried by the plunger, the one being fast thereto and the other loose, said jaws projecting through an opening in the side of the casing, and a coil spring mounted upon the plunger and exerting a pressure against the fixed jaw to normally hold the plunger and jaws in forward position.

2. A cord holder of the character specified, comprising a casing having openings in opposite sides, a plunger therein, jaws mounted upon the plunger and movable forwardly therewith to grip the cord therebetween, the outer jaw being loose to admit of the inner jaw moving rearwardly with the plunger to release the cord, and a spring normally urging the plunger and jaws forwardly.

3. A cord holder of the character specified, comprising a casing having openings in opposite sides, a plunger within the casing, fixed and movable jaws carried by the plunger and having opposite ends projecting through the openings in the sides of the casing and a spring mounted upon the plunger and engaging the fixed jaw to normally hold the plunger and jaws in forward position.

4. A cord holder comprising a casing open at its outer end and slotted in opposite sides, a plate closing the outer end of the casing and the slots in the sides thereof, a pair of jaws extending across the casing and through the slots in the sides thereof, a plunger mounted in the casing and the plate closing the outer end thereof and having the jaws thereon, and a spring mounted on the plunger and housed within the casing, and normally urging the plunger and jaws outwardly.

In testimony whereof I affix my signature.

SIDNEY I. WHARTON. [L. S.]