(No Model.) 2 Sheets—Sheet 1.

T. F. DOWNEY.

GAS BURNER FOR COOKING STOVES OR RANGES.

No. 456,139. Patented July 21, 1891.

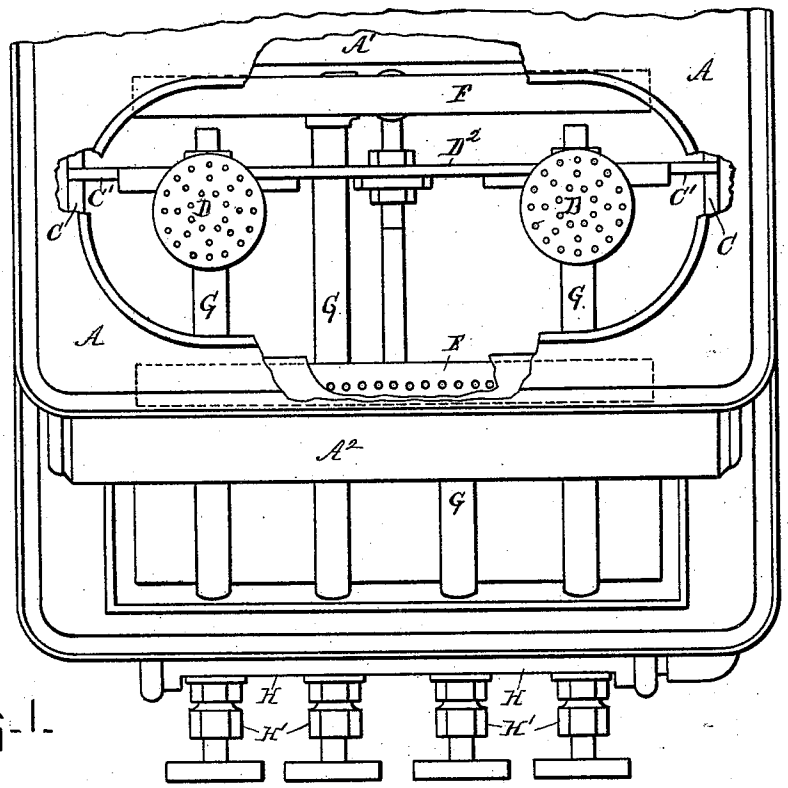

Fig. 1.

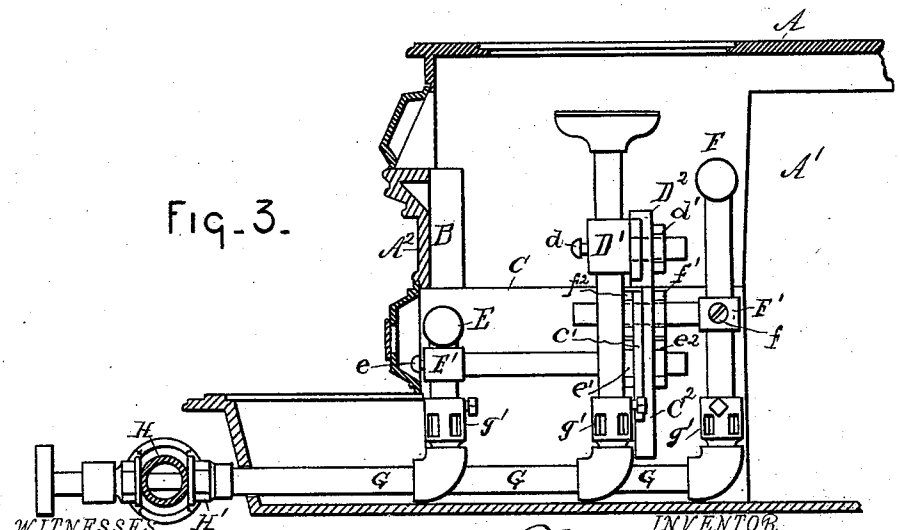

Fig. 3.

WITNESSES

C. J. Shipley

F. Clough

INVENTOR

Thomas F. Downey

By Wells W. Leggett & Co

Attorneys.

THE NORRIS PETERS CO., PHOTO-LITHO., WASHINGTON, D. C.

(No Model.) 2 Sheets—Sheet 2.

T. F. DOWNEY.

GAS BURNER FOR COOKING STOVES OR RANGES.

No. 456,139. Patented July 21, 1891.

Fig. 2.

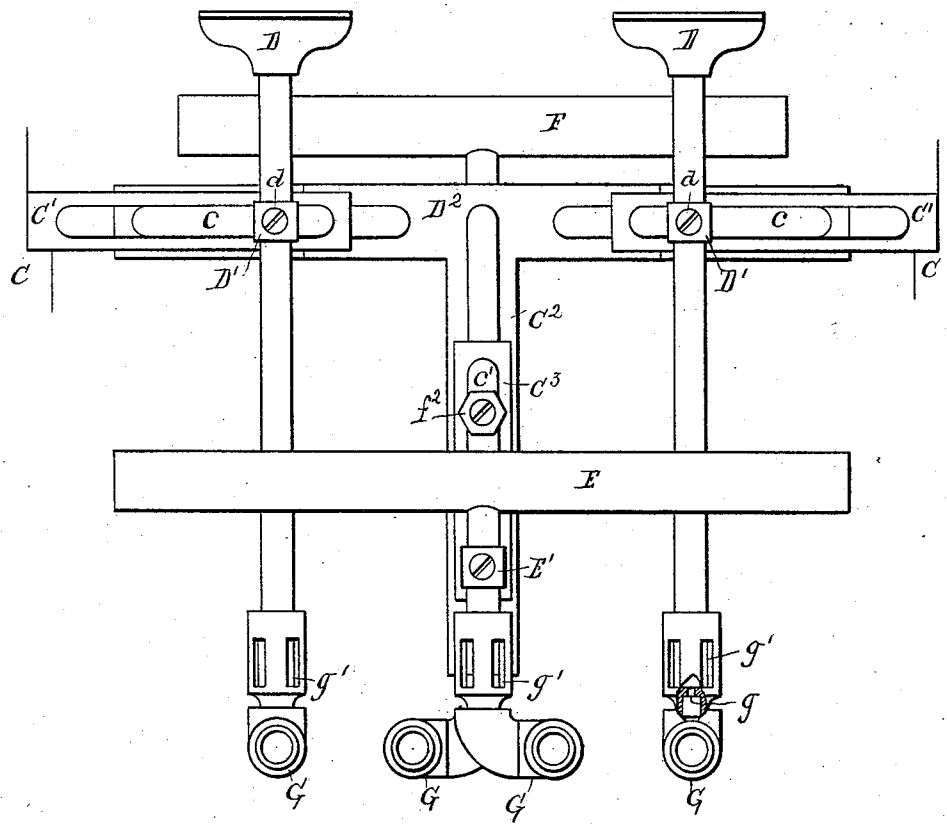

WITNESSES
C. J. Shipley
F. Clough.

INVENTOR
Thomas F. Downey
By Wells W. Leggett,
Attorneys.

THE NORRIS PETERS CO., PHOTO-LITHO., WASHINGTON, D. C.

UNITED STATES PATENT OFFICE.

THOMAS F. DOWNEY, OF DETROIT, MICHIGAN, ASSIGNOR OF ONE-HALF TO FRANK P. BYRNE, OF SAME PLACE.

GAS-BURNER FOR COOKING STOVES OR RANGES.

SPECIFICATION forming part of Letters Patent No. 456,139, dated July 21, 1891.

Application filed September 8, 1890. Serial No. 364,307. (No model.)

To all whom it may concern:

Be it known that I, THOMAS F. DOWNEY, a citizen of the United States, residing at Detroit, county of Wayne, State of Michigan, have invented a certain new and useful Improvement in Gas-Burners for Cooking Stoves or Ranges; and I declare the following to be a full, clear, and exact description of the invention, such as will enable others skilled in the art to which it pertains to make and use the same, reference being had to the accompanying drawings, which form a part of this specification.

In the drawings, Figure 1 is a plan view illustrating my burner in position in a stove. Fig. 2 is a front view of the same with parts broken away to illustrate the mechanism. Fig. 3 is a longitudinal section from front to rear of the stove.

Cooking stoves and ranges vary so greatly in the size of their fire-pots and the relative arrangement of the grate with respect to the stove-lids and the relative arrangement of the water-back, if one is employed, with respect to the other parts that a large variety of burners have had to be made to accommodate these different conditions, and even then the burners have not been adapted properly for the different conditions met with in use.

It is the purpose of my invention to produce a burner the parts of which shall be adjustable, so that it may be fitted to any of the various varieties of stoves and ranges. To this end the supporting-frame is made adjustable lengthwise to reach and rest upon the ordinary grate-supports, and the burners for the stove-openings are made adjustable both laterally and vertically to bring them centrally beneath the openings and into any desired proximity therewith, and I provide a burner for the water-back or water-front, as the case may be, which is made adjustable up and down to conform to the position of the water-back or water-front and adjustable in a direction from front to rear of the stove to accommodate any particular projection of the said water-back or water-front, and I provide also a similarly-adjustable burner for heating the ovens, the purpose being that when once adjusted to conform to the requirements of the stove or range these parts may be rigidly set in place and connected up in the usual way with the gas-pipes or with a peculiar form of manifold valve, hereinafter described.

In carrying out my invention, A represents the top of the stove, A′ its ovens, and A^2 the front of the stove.

B is a water-front.

C represents the usual rests for the grate.

D^2 is the supporting-frame of my burner. It is provided with adjustable sliding sections C′, adapted to be set out lengthwise of the frame or drawn in, as may be necessary, to fit the frame to any particular grate-rest. *c* represents slots in the frame and said adjustable sections.

C^2 is an upright section of the frame, provided with a similar adjustable slide C^3 and slots *c*′.

D represents burners for the respective stove holes or openings in the top of the stove. The stem of each burner is sleeved through a holder D′, and is made adjustable up and down therein through the medium of a set-screw *d* or equivalent. This holder D′ has a shank passing through the slot *c*, and back of the frame C is provided with a nut *d*′.

It is thus apparent that this burner may be adjusted up and down and so located at any desired position below the stove-hole, and when properly adjusted may by the set-screw *d* be fixed in this adjustment. Again, the holder D′ may be adjusted in a direction from side to side of the stove in the slot *c* and so given its exact lateral position with respect to the stove-hole, and be then firmly fixed in this adjustment by tightening the nut *d*′.

E is the burner for heating the water-front or water-back, as the case may be. The stem of this burner is sleeved through the support E′ in the same manner as last described, and may be adjusted in any position up or down through the medium of the set-screw *e*. The shank of this support passes backward through the slot *c*′, and nuts *e*′ e^2 are placed both on the front and rear of the supporting-frame, so that the said burner may be adjusted in a direction from front to rear of the stove, and in this way the burner may be given any desired position with respect to the water-front and be made to conform to

the different conditions which exist in different stoves or ranges.

F is a burner adapted for the ovens. Its arrangement is similar to that of the burner E, it being provided with a support F′, set-screw *f*, and front and rear adjusting-nuts *f′ f²*. By these means this burner may be likewise adjusted to any particular altitude with respect to the oven, and may be adjusted to give it any desired position in front of the oven.

It is apparent that this burner is adapted at once for all the varying conditions met with in the usual classes of stoves and ranges, and a very considerable expense is thus saved in the fitting up of the said stoves and ranges for the use of gas.

I would also have it understood that while the burners here shown are designed more particularly for natural gas the contrivance is equally well adapted for the burners used with gasoline, vapor, or the vapor from crude petroleum or kerosene, and I would have it understood that my claims contemplate such employment of it as well as with natural gas.

Each burner is provided at its lower end with a gas-jet *g* and with an air-mixer *g′* of any usual construction, and when the burners are once set they are connected by pipes G, which lead thereto from a manifold-valve chamber H, and this chamber is provided with independent valves H′ for admitting gas independently to one or more of said burners, so that either burner may be cut off entirely if it is not necessary to use the same.

I do not here lay special claim to the manifold-valve chamber and its valve, *per se*, because I purpose to make the said manifold-valve apparatus the subject of a separate application for Letters Patent.

What I claim is—

1. The combination, with gas-burners for cooking stoves or ranges, of an extensible frame carrying the burners and adapted to rest upon supports within the stove or range, and means for adjusting the burners to different positions on the extensible frame, substantially as described.

2. The combination, with gas-burners for cooking stoves or ranges, of an adjustable frame carrying the burners and adapted to rest on supports within the stove or range, and means for adjusting the burners vertically and laterally on the frame, substantially as described.

3. The combination of a frame adapted to rest on supports within a cooking stove or range having a water-front, pot-hole burners carried by the frame, a burner for the water-front, and means for adjusting the burners vertically and laterally on the frame, substantially as described.

4. The combination, with gas-burners for a cooking stove or range, of the adjustable frame D^2, comprising extensible sections C′ and slots *c c′*, the gas-burner supports D′ E′ F′, and means for vertically adjusting the burners in the supports, substantially as described.

In testimony whereof I sign this specification in the presence of two witnesses.

THOMAS F. DOWNEY.

Witnesses:
C. J. SHIPLEY,
MARION A. REEVE.