June 22, 1954 G. H. HEDMAN 2,681,621

REVERSIBLE GEAR PUMP

Filed Nov. 7, 1951 2 Sheets-Sheet 1

Fig. 1.

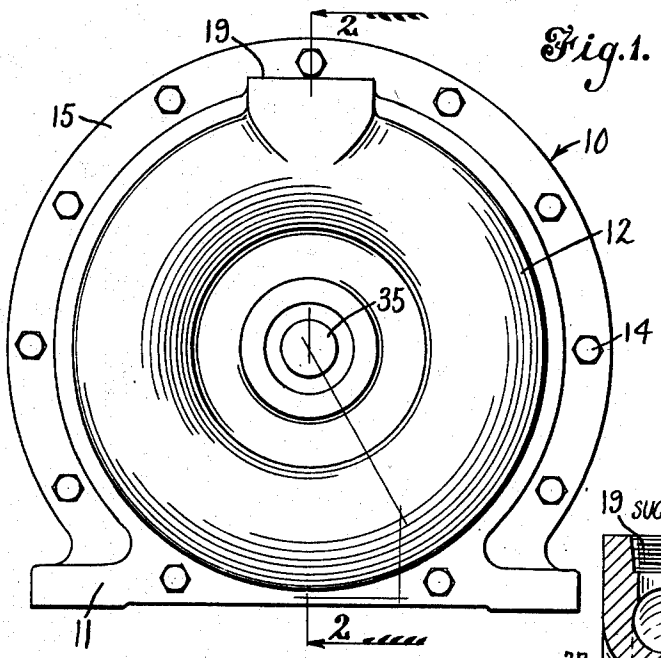

Fig. 2

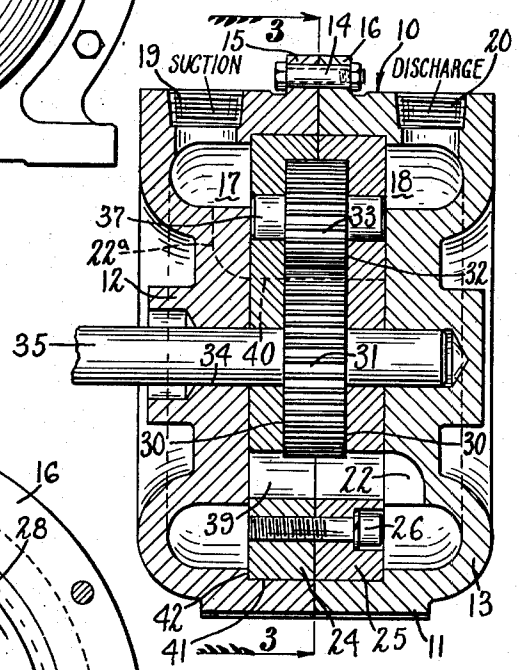

Fig. 3

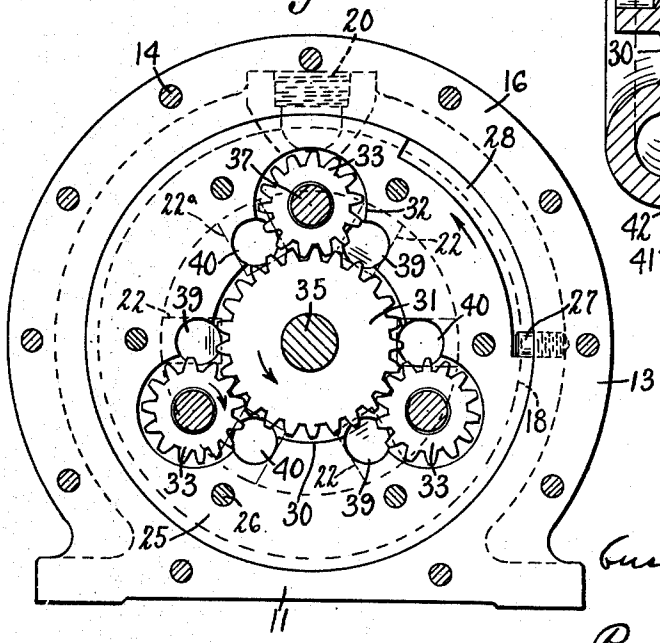

INVENTOR
Gustave H. Hedman
BY
Rockwell & Barthelow
ATTORNEYS

June 22, 1954 G. H. HEDMAN 2,681,621

REVERSIBLE GEAR PUMP

Filed Nov. 7, 1951 2 Sheets-Sheet 2

Fig. 4.

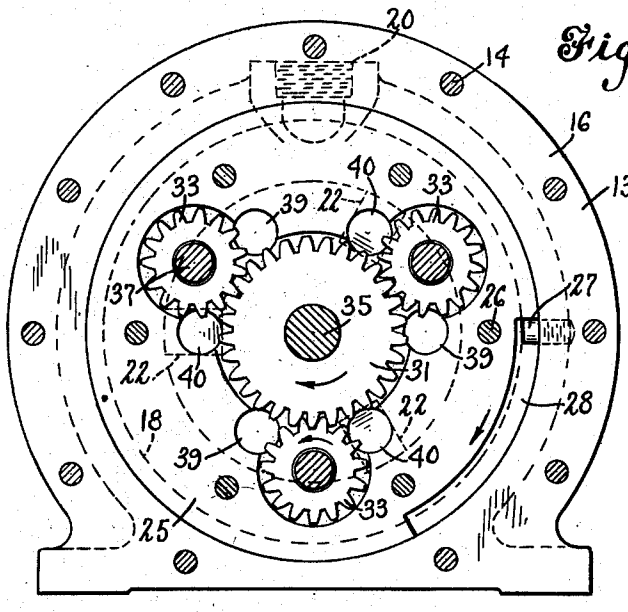

Fig. 5.

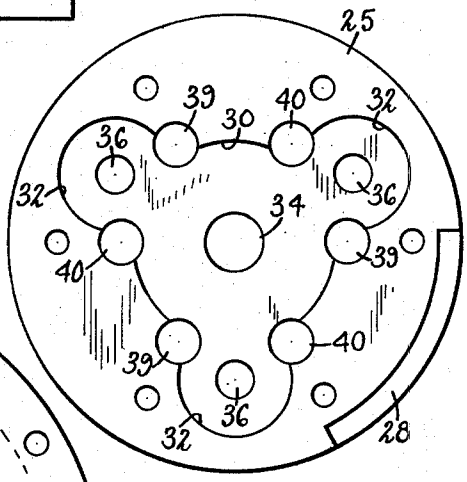

Fig. 6.

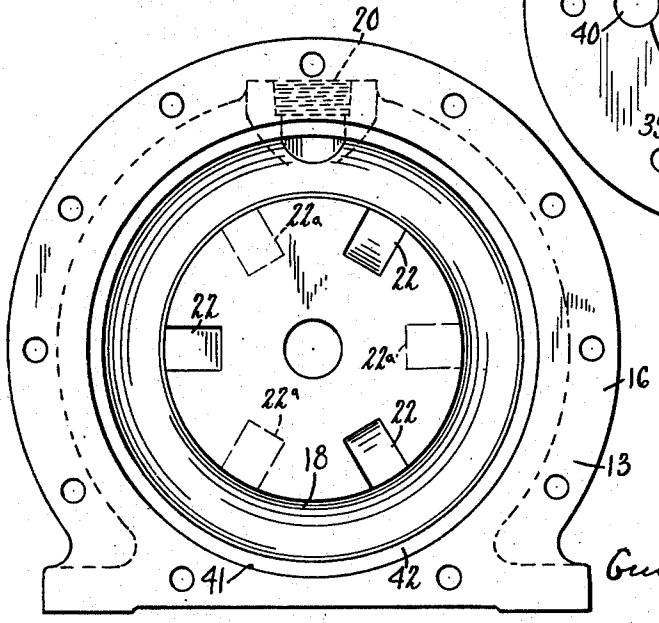

INVENTOR
Gustave H. Hedman
BY
Bockwell & Berthold
ATTORNEYS

Patented June 22, 1954

2,681,621

UNITED STATES PATENT OFFICE

2,681,621

REVERSIBLE GEAR PUMP

Gustave Helge Hedman, Kenmore, N. Y., assignor to Farrel-Birmingham Company, Incorporated, Ansonia, Conn., a corporation of Connecticut

Application November 7, 1951, Serial No. 255,182

11 Claims. (Cl. 103—126)

1

This invention relates to a fluid pump and more particularly to a gear-type pump in which the fluid is propelled or pumped by means of intermeshing gears. It also relates particularly to a reversible gear pump or a pump of this type so constructed that its drive shaft may be reversed, and the flow of fluid will be in the same direction as occurred prior to the reversal of the pump shaft or rotor. In other words, regardless of the direction in which the pump is driven, the direction of flow through the pump remains constant.

In the illustrated form of the invention, there is provided a casing consisting of two similar but oppositely disposed parts between which is housed a carrier, the carrier supporting a sun gear and a plurality of planet gears. Each of the two parts of the housing is provided with an inwardly opening annular groove or collecting annulus for the fluid which is being pumped, oil, for example. One of these annuli is at the suction side of the pump and receives the oil from a source of supply while the other is at the discharge side of the pump and delivers the oil from the pump through a discharge or outlet opening.

The carrier is provided with a pair of openings adjacent each of the planet gears, one of these serving as the inlet and the other the outlet opening, and passages are provided in each of the suction and discharge portions of the housing connecting these openings to the annular grooves. That is to say, one of the openings adjacent one of the planet gears will be connected to the groove in the suction side of the casing while the other opening in the carrier adjacent the same gear will be in communication with the discharge side of the casing and the gear will move or pump the oil from the inlet opening to the outlet.

It will be seen, therefore, that the mechanism is comparatively simple, and the reversal of the direction of the pump shaft may be effected without varying the direction of flow of the oil in a simple manner. For this purpose the carrier is freely supported in the housing and is permitted to rotate through an angle of approximately 60 degrees. As shown, there are three of the planet gears provided, and six openings through the carrier approximately 60 degrees apart, one of these openings being on each side of one of the gears. It will be apparent that when the carrier is rotated through approximately 60 degrees the opening through the carrier which was formerly connected to the suction side of the pump will now be connected with the discharge side of the pump, but as the gears will be rotating in the direction opposite to that when the carrier was in its original position, the opening through the carrier which was formerly an inlet opening will become an outlet opening, and thus while the direction of the gears will be reversed due to reversal of the direction of the drive shaft, the flow of oil into and out of the casing of the pump will always be in one direction.

2

One object of the present invention is to provide a reversible gear pump of comparatively simple construction.

A further object of the invention is to provide a reversible gear pump which will be of simple construction and efficient in operation in that it will effect a smooth continuous flow of fluid without noise or vibration.

Another object of the invention is to provide a reversible gear pump having a large volumetric capacity in a device of relatively small size by means of a plurality of planet gears arranged about a sun gear, each planet gear acting, as a pump, with the sun gear, with both the planet teeth and sun teeth carrying the fluid.

Still another object of the invention is the provision of a reversible gear-type pump without the provision of automatic valves to control the direction of the flow of oil through the pump whereby considerable pressure can be developed in the pump.

Still another object of the invention is to provide a reversible gear-type pump wherein a carrier is freely mounted within a casing, the carrier providing a support for a sun gear and a plurality of planet gears meshing with the sun gear, the carrier being permitted a certain amount of rotation within the housing whereby it occupies one position when the pump shaft is rotated in one direction and another position when the pump shaft is rotated in the opposite direction in order that the suction and discharge ports of the pump remain the same regardless of the direction of rotation of the shaft.

To these and other ends the invention consists in the novel features and combinations of parts to be hereinafter described and claimed.

In the accompanying drawings:

Fig. 1 is a side elevational view of a reversible gear pump embodying my invention;

Fig. 2 is a sectional view on line 2—2 of Fig. 1;

Fig. 3 is a sectional view on line 3—3 of Fig. 2;

Fig. 4 is a view similar to Fig. 3 except that the carrier is shown in another position, which position it occupies when the shaft is rotated in a direction opposite to that shown in Fig. 3;

Fig. 5 is a detail view of one part of the carrier; and

Fig. 6 is an inside view of one half of the casing, the internal mechanism being removed.

In order to illustrate a preferred embodiment of my invention, I have shown in the drawings a reversible gear pump comprising a housing designated generally by the numeral 10, the housing resting upon a base 11. As shown in Figs. 2 and 6, this housing is formed of two substantially identical parts, a suction portion 12 and a discharge portion 13, these two parts being secured together by bolts 14 passing through registering openings in flanges 15 and 16.

Each of these housings is provided with an annular oil ring or groove, as shown at 17, for the suction side of the housing and at 18 for the discharge side of the housing, and communicating with these grooves is the suction port 19 and the discharge port 20 so that the oil entering through the suction port will be distributed around the groove 17, while after passing through the pump it will be collected in the groove or annulus 18 and be discharged through the opening 20, and this action occurs regardless of the direction of the pump shaft.

Each of the two housing sections 12 and 13 is identical and is provided, as shown in Fig. 6, with three ports or passages which provide communication between the annuli 17 and 18 and certain openings in the support or carrier for the gears, as will be hereinafter described. These passages in the discharge section of the housing are shown at 22 in Fig. 2, while the suction portion of the housing is provided with ports 22^a, shown in dotted lines in Figs. 2 and 6, similar to the port 22 in the discharge part of the housing, these ports 22^a will, when the two housing sections are placed face to face, be disposed circumferentially between the ports 22 of the section 13 and at a position substantially 60 degrees from the ports 22, the latter being substantially 120 degrees apart.

The gear carrier is also comprised of two parts 24 and 25, these parts being identical and one of them being shown in Fig. 5 of the drawings. As shown, they are disposed within the casing in face-to-face relation and secured together by screws 26. The carrier thus formed from these two sections is freely mounted within the casing so that it will rotate therein, its rotation, however, being limited by a stop screw or pin 27 secured in the casing, the inner end of which stands within an arcuate groove 28 formed in the periphery of the carrier, this groove being slightly more than 60 degrees in length so as to permit the rotation of the carrier through an angle of 60 degrees from one position to another.

As shown in Fig. 5, each portion of the carrier is recessed to provide a space 30 to receive the central or sun gear 31 and additional spaces or chambers 32 to receive the planet gears 33. The latter are three in number, as illustrated, and are set approximately 120 degrees apart and their teeth mesh with the teeth of the gear 31.

Also each part of the carrier is provided with an opening 34 to rotatably receive the main driving shaft 35 upon which the main gear 31 is mounted, and is also provided with three openings 36 to rotatably receive the shafts 37 of the planet gears 33.

The carrier sections 24 and 25 are also provided with openings or passages 39 and 40, there being a pair of these openings adjacent each of the planet gears 33. These openings 39 and 40 communicate at their ends with the passages 22 and 22^a depending upon the position of the carrier. That is to say, when the carrier is in the position shown in Fig. 3, the passages 39 will communicate with the passages 22 and the annular groove 18 while the openings 40 will communicate with the passages 22^a and the annular groove 17, as shown in Fig. 2. If, however, the carrier is in the position shown in Fig. 4, the openings 39 will communicate with the passages 22^a while the openings 40 will communicate with the passages 22.

It will be apparent that when the direction of the main shaft 35 and the sun gear 31 is in the direction of the arrow shown in Fig. 3, the torque developed between the gears will cause the carrier to assume the position shown in Fig. 3 in which the stop pin 27 is at the lower end of the arcuate groove 28. If, however, the drive shaft is rotated in the opposite direction, as shown in Fig. 4, the resulting torque will cause the carrier to move in a clockwise direction to the position shown in Fig. 4 or through an angle of substantially 60 degrees.

The operation of the device is as follows. Assuming that the drive shaft is rotated in a counter-clockwise direction, as shown in Fig. 3, it will be seen from Fig. 2 of the drawings that the opening 39 communicates with the port 22 and the annular groove 18 at the discharge side of the housing, while the opening 40 in the carrier will communicate with one of the passages 22^a which leads to the annular groove 17 at the suction side of the carrier. Therefore, when the pump is in operation, oil will be drawn in through the suction opening 19, the annular groove 17, passages 22^a, and the openings 40. From each of the openings 40 the oil is carried in two directions. It will be carried about the exterior of the corresponding planet gear to the outlet passage 39 on the other side of the planet gear. It will also be carried around the teeth of the sun gear 31 to the passage 39 associated with the adjacent planet gear. At this time the passages 39 are all outlet passages as they communicate with passages 22 leading to the annulus 18 from which the oil will be discharged through the outlet or discharge passage 20. It will be apparent, therefore, that the oil which is drawn in through any one of the inlets 40 will be carried to the outlets 39 on each side of such inlet 40, in one case around the teeth of the planet gear, and in the other case around the teeth of the sun gear.

However, if the shaft 35 is rotated in the opposite direction, the resulting torque will cause the carrier to rotate in a clockwise direction through an angle of 60 degrees to the position shown in Fig. 6. At this time the openings 40 have been rotated to the positions formerly occupied by the openings 39, and the openings 39 to the positions formerly occupied by the openings 40. The openings 39 are now in communication with the annular groove 17 at the suction side of the casing through the passages 22^a and have become the inlet openings. From there the oil is pumped around the exterior side of the planet gears 33 and around the teeth of the sun gear to the openings 40 which are now in communication with the passages 22 leading to the annular groove 18 at the discharge side of the casing. It will be seen, therefore, that regardless of the direction of the motor, the direction of the oil through the pump remains constant and the suction and discharge openings remain the same.

It will be seen from Fig. 2 of the drawing that

the two sections 11 and 12 of the casing are provided with complemental recesses which together provide an annular groove 41 to receive the gear carrier, and that this groove is provided with side shoulders 42 to hold the carrier in place laterally while permitting it to rotate within the casing as permitted by the pin 27 and groove 28.

It will be obvious that minor changes of design may be resorted to without departing from the invention. For example, the number of planet gears employed may be varied, as desired, as may also the number of teeth upon these gears and the ratio of each of the planet gears to the sun gear. The number of teeth in the planet gears may be prime in respect to those of the sun gear to reduce pulsation in the discharge fluid.

While I have shown and described a preferred embodiment of my invention, it will be understood that it is not to be limited to all of the details shown, but is capable of modification and variation within the spirit of the invention and within the scope of the claims.

What I claim is:

1. In a reversible gear pump, a housing having a suction port and a discharge port, a carrier mounted therein for rotative movement, a pumping member in the form of a sun gear, pumping members in the form of planet gears meshing with said sun gear, said gears being rotatably mounted in pumping chambers formed in the carrier, the shaft of said sun gear extending without the housing, inlet ports in said housing communicating with said suction port and outlet ports in said housing communicating with said discharge port, means limiting the rotation of the carrier in both directions of rotation, and means connecting said inlet and outlet ports through the pumping chambers formed in said carrier only when the latter is at the limit of its movement in either direction.

2. In a reversible gear pump, a housing having a suction port and a discharge port, a carrier mounted therein for rotative movement, a pumping member in the form of a sun gear, pumping members in the form of planet gears meshing with said sun gear, said gears being rotatably mounted in pumping chambers formed in the carrier, the shaft of said sun gear extending without the housing, inlet ports in said housing communicating with said suction port and outlet ports in said housing communicating with said discharge port, means connecting said inlet ports to the spaces at one side of the meshing teeth of said gears, and connecting the outlet ports to the spaces at the other side of the meshing teeth of said gears when said carrier is in one rotative position in the housing, and reversing said connections when the carrier is in another rotative position, said carrier being automatically moved from one position to the other when the direction of rotation of said sun gear is reversed, and means for limiting the rotation of said carrier in both directions of rotation.

3. In a reversible gear pump, a housing having a discharge port and a suction port, said housing being provided with a plurality of outlet ports communicating with said discharge port and being provided with a plurality of inlet ports communicating with said suction port, a carrier mounted in the housing, a pumping member in the form of a sun gear rotatably mounted in the carrier, a plurality of pumping members in the form of planet gears rotatably mounted in the carrier, the teeth of which mesh with those of the sun gear, each of said gears being located in a pumping chamber formed in the carrier, said carrier being provided with a through passage on each side of the meshing teeth of each of said planet gears with said sun gear, one passage adjacent each planet gear being connectible with one of the inlet ports and the other passage adjacent each of said gears being connectible with one of the outlet ports, said carrier being rotatably mounted in the housing and being movable to a position where the connections between said passages and said ports are reversed, and means for limiting rotative movement of the carrier in both directions of rotation.

4. In a reversible gear pump, a housing having a suction port and a discharge port, a carrier mounted therein for limited rotative movement, a sun gear and a plurality of planet gears rotatably mounted in pumping chambers formed in the carrier and forming pumping members, said planet gears meshing with the sun gear to receive fluid at one side of the mesh and deliver it at the other side thereof, the housing being provided with a plurality of inlet ports at one side of the carrier communicating with said suction port and being provided with a plurality of outlet ports at the other side of the carrier communicating with said discharge port, and means connecting said ports through the carrier whereby the direction of flow through the pump is constant regardless of the direction of rotation of the sun gear.

5. In a reversible gear pump, a housing having inlet and outlet ports, said housing being provided with a distributing ring adjacent its inlet port and a collecting ring adjacent the outlet port, a carrier mounted in said housing for limited rotative movement in both directions of rotation, a sun gear and a plurality of planet gears rotatably mounted in pumping chambers formed in the carrier and forming pumping members, the teeth of the planet gears meshing with those of the sun gear to receive fluid at one side of the mesh and deliver it at the other side, a passage extending through the carrier at each side of the mesh of each of said planet gears with said sun gear, and means connecting one of said pair of passages associated with each gear with the distributing ring and the other passage of each pair with the collecting ring, and said means connecting the first set of passages with the collecting ring and the second set of passages with the distributing ring when the carrier is moved to another rotative position.

6. In a reversible gear pump, a housing having inlet and outlet ports, said housing being provided with a distributing ring adjacent its inlet port and a collecting ring adjacent the outlet port, a carrier mounted in said housing for limited rotation, a sun gear and a plurality of planet gears rotatably mounted in pumping chambers formed in the carrier and forming pumping members, the teeth of the planet gears meshing with those of the sun gear to receive fluid at one side of the mesh and deliver it at the other side, a passage extending through the carrier at each side of the mesh of each of said planet gears with said sun gear, and means connecting one of said pair of passages associated with each gear with the distributing ring and the other passage of each pair with the collecting ring, and said means connecting the first set of passages with the collecting ring and the second set of passages with the distributing ring when the carrier is moved to another rotative position, and said carrier be-

ing freely mounted in said casing whereby it is moved from one position to another by reversal of the direction of rotation of the sun gear, and means for limiting the rotation of the carrier in the housing in both directions.

7. In a gear pump for connection to a reversible driving shaft, a housing having a suction port and a discharge port, said housing being provided with a plurality of inlet ports communicating with said suction port and being provided with a plurality of outlet ports communicating with said discharge port, a carrier mounted in the housing for angular movement and disposed between said inlet ports and said outlet ports, said carrier being provided with a concentric pumping chamber and being provided with a plurality of radial pumping chambers communicating with said concentric chamber, each of said radial chambers being provided with a first port and a second port, a pumping member in the form of a gear rotatably mounted in each of said radial chambers, a pumping member in the form of a gear rotatably mounted in said concentric chamber and meshing with each of the radial gears, means for actuating said gears, and means limiting angular movement of said carrier in both directions, said carrier being angularly movable to a position in which each of said first ports forms an inlet communicating with one of the inlets formed in the housing and each of said second ports forms an outlet communicating with one of the outlets formed in the housing, and the carrier being angularly movable to another position in which each of said second ports forms an inlet communicating with one of the inlets formed in the housing and each of said first ports forms an outlet communicating with one of the outlets formed in the housing.

8. In a gear pump for connection to a reversible driving shaft, a housing having a suction port and a discharge port, said housing being provided with a plurality of inlet ports communicating with said suction port and being provided with a plurality of outlet ports communicating with said discharge port, a carrier mounted in the housing for angular movement and disposed between said inlet ports and said outlet ports, said carrier being provided with a concentric pumping chamber and being provided with a plurality of radial pumping chambers communicating with said concentric chamber, each of said radial chambers being provided with a first port and a second port, a pumping member in the form of a gear rotatably mounted in each of said radial chambers, a pumping member in the form of a gear rotatably mounted in said concentric chamber and meshing with each of the radial gears, means for actuating said gears comprising a shaft in fixed relation to one of said gears and extending without the housing, and means limiting angular movement of said carrier in both directions, said carrier being angularly movable to a position in which each of said first ports forms an inlet communicating with one of the inlets formed in the housing and each of said second ports forms an outlet communicating with one of the outlets formed in the housing, and the carrier being angularly movable to another position in which each of said second ports forms an inlet communicating with one of the inlets formed in the housing and each of the first ports forms an outlet communicating with one of the outlets formed in the housing.

9. In a gear pump for connection to a reversible driving shaft, a housing having a suction port and discharge port, said housing being provided with a plurality of inlet ports communicating with said suction port and being provided with a plurality of outlet ports communicating with said discharge port, a carrier mounted in the housing for angular movement and disposed between said inlet ports and said outlet ports, said carrier being provided with a concentric pumping chamber and being provided with a plurality of radial pumping chambers communicating with said concentric chamber, each of said radial chambers being provided with a first port and a second port, a pumping member in the form of a gear rotatably mounted in each of said radial chambers, a pumping member in the form of a gear rotatably mounted in said concentric chamber and meshing with each of the radial gears, means for actuating said gears comprising a shaft in fixed relation to the concentric gear and extending without the housing, and means limiting angular movement of said carrier in both directions, said carrier being angularly movable to a position in which each of said first ports forms an inlet communicating with one of the inlets formed in the housing and each of said second ports forms an outlet communicating with one of the outlets formed in the housing, and the carrier being angularly movable to another position in which each of said second ports forms an inlet communicating with one of the inlets formed in the housing and each of said first ports forms an outlet communicating with one of the outlets formed in the housing.

10. In a gear pump for connection to a reversible driving shaft, a housing having a suction port and a discharge port, said housing being provided with a plurality of inlet ports communicating with the suction port and being provided with a plurality of outlet ports communicating with the discharge port, a carrier mounted in the housing for angular movement and disposed between said inlet ports and said outlet ports, said carrier being provided with a plurality of radial pumping chambers formed therein, each pumping chamber having a first port and a second port, a pumping member in the form of a gear rotatably mounted in each pumping chamber, means for actuating said gears comprising a gear arranged concentrically of the carrier meshing with the radial gears to drive the last-mentioned gears, and means limiting angular movement of the carrier in both directions, said carrier being angularly movable to a position in which the first port of each chamber forms an inlet communicating with one of the inlets formed in the housing and the second port of the chamber forms an outlet communicating with one of the outlets formed in the housing, and the carrier being angularly movable to another position in which the second port of each chamber forms an inlet communicating with one of the inlets formed in the housing and the first port of the chamber forms an outlet communicating with one of the outlets formed in the housing.

11. In a reversible gear pump, a housing having a suction port and a discharge port, a second housing mounted therein for angular movement relatively to the first housing, the first housing being provided with means cooperating with the second housing to limit relative angular movement of the latter in both directions, a pumping member in the form of a sun gear, pumping members in the form of planet gears meshing with

the sun gear, said gears being rotatably mounted in pumping chambers formed in the second housing, means for actuating said gears comprising a rotary shaft in fixed relation to one of said gears, inlet ports in the first housing communicating with said suction port and outlet ports in the first housing communicating with said discharge port, and means connecting said inlet and outlet ports through the pumping chambers formed in the second housing only when the latter is at the limit of its angular movement in either direction relatively to the first housing.

References Cited in the file of this patent

UNITED STATES PATENTS

Number	Name	Date
979,272	Feller	Dec. 20, 1910
1,287,118	Shore	Dec. 10, 1918
1,870,824	Sheppard, Jr.	Aug. 9, 1932
1,946,510	Truesdell	Feb. 13, 1934
1,964,330	Pitt	June 26, 1934
2,128,330	Schlitz	Aug. 30, 1938
2,147,928	Seagren	Feb. 21, 1939
2,151,482	Neeson	Mar. 21, 1939
2,233,709	Osborne	Mar. 4, 1941
2,311,237	Loveday	Feb. 16, 1943
2,333,885	Poulter	Nov. 9, 1943
2,371,227	Dodge	Mar. 13, 1945
2,371,228	Dodge	Mar. 13, 1945
2,387,230	Bock	Oct. 23, 1945
2,399,008	Doran	Apr. 23, 1946

FOREIGN PATENTS

Number	Country	Date
359,508	Great Britain	Oct. 26, 1931

OTHER REFERENCES

Lynch et al., abstract of application Serial Number 68,614 published Dec. 4, 1951, 653 O. G. 283/4.