United States Patent [19]

Jones, Sr.

[11] **3,847,702**

[45] **Nov. 12, 1974**

[54] **PROCESS FOR MANUFACTURE OF INTEGRAL DIAPER WAIST BAND FASTENER**

[76] Inventor: **John Leslie Jones, Sr.,** 1070 Glen Oaks Blvd., Pasadena, Calif. 91105

[22] Filed: **Oct. 4, 1971**

[21] Appl. No.: **185,936**

Related U.S. Application Data

[62] Division of Ser. No. 867,505, Oct. 20, 1969, Pat. No. 3,610,244.

[52] **U.S. Cl.** **156/265,** 156/269, 156/519

[51] **Int. Cl.** **B32b 31/00**

[58] **Field of Search** 156/250, 263, 256, 264, 156/265, 269, 519

[56] **References Cited**

UNITED STATES PATENTS

2,597,868	5/1952	Hogue et al.	156/519
3,758,363	9/1973	Frick	156/519

Primary Examiner—Douglas J. Drummond

[57] **ABSTRACT**

This invention teaches a single use, rectangular area, pressure sensitive adhesive waist band securing means suitable for holding the diaper on a baby's torso without pins. A first face of a thin, flexible, nonextensible first waist band is permanently, completely secured to the exterior fluid resistant diaper membrane, and is disposed completely across the first diaper and normal to the diaper sides, forming two first waist band terminus areas at the diaper sides. On the face of the first waist band terminus areas opposed to the absorbent diaper pad, each one of the pair of first waist band terminuses can have an adhesive securing means. Each adhesive securing means comprises a pressure sensitive adhesive coating area permanently secured to a first waist band terminus area, and the coating area is completely covered with a removable, protective release paper sheet area. A first face of a thin, flexible, nonextensible, second waist band is permanently secured to the fluid resistant diaper membrane, disposed completely across and bonded to the second diaper end, normal to the diaper sides. The second waist band adhesive securing means has a pair of integral, nonextensible band short extensions, each one of the pair oppositely extending beyond each one of the pair of diaper sides. Each of the band short extensions has a pressure sensitive adhesive coating area permanently secured to the band short extension face which is adjacent to the fluid absorbtion side of the diaper. Each of the adhesive coating areas are completely covered by removable, protective release paper sheet areas. The pressure sensitive adhesive waist band securing means are formed from sheet stock components, which are formed into individual waist bands, and then bonded to a diaper web being continuously formed on an assembly line. The first and second waist bands are both positioned and bonded to the diaper web prior to cutting the diaper web into individual diapers, each diaper then having a pair of waist bands.

1 Claim, 11 Drawing Figures

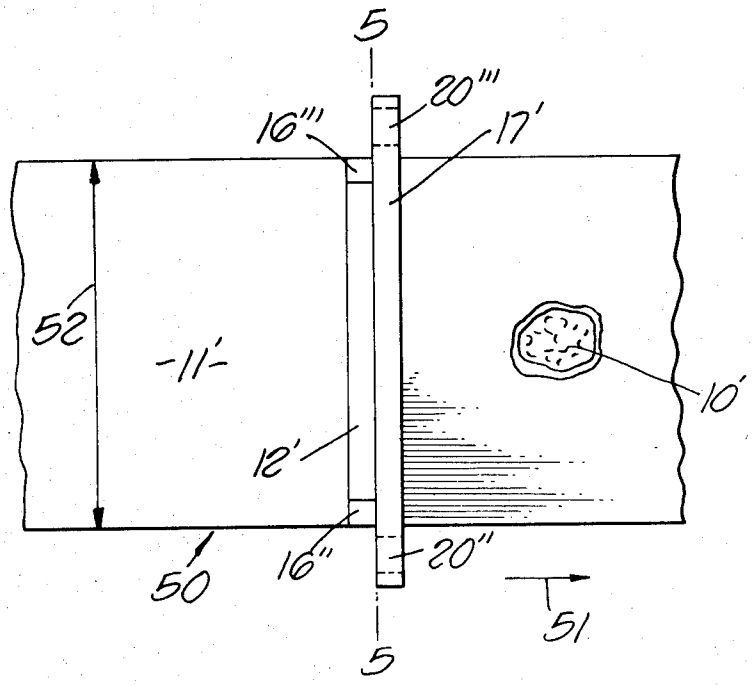

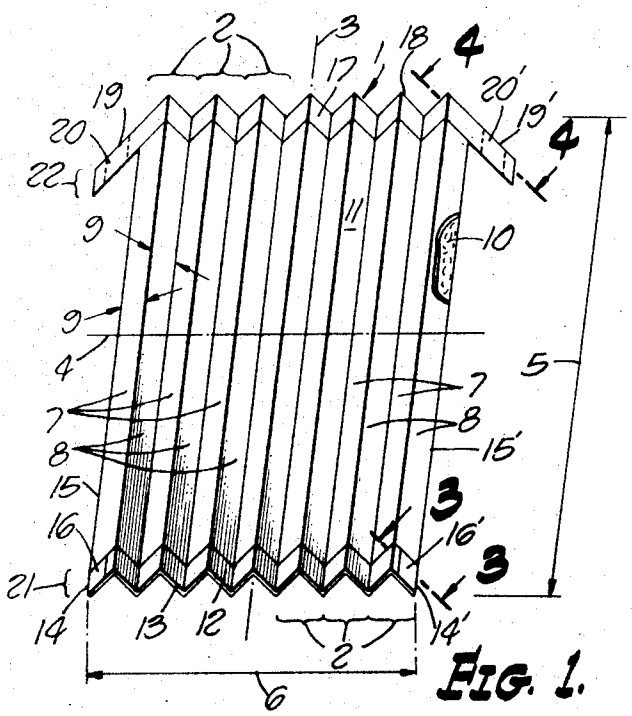

FIG. 1.

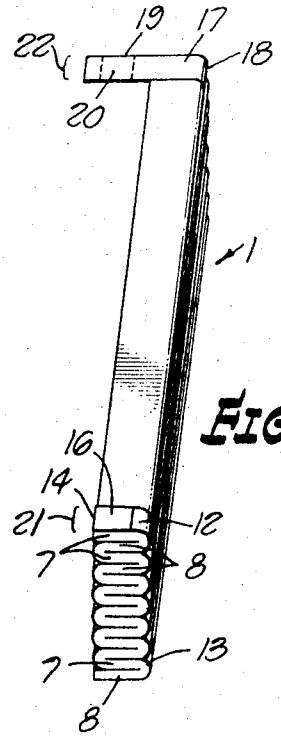

FIG. 2.

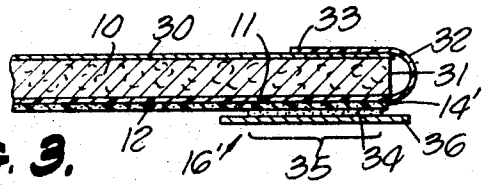

FIG. 3.

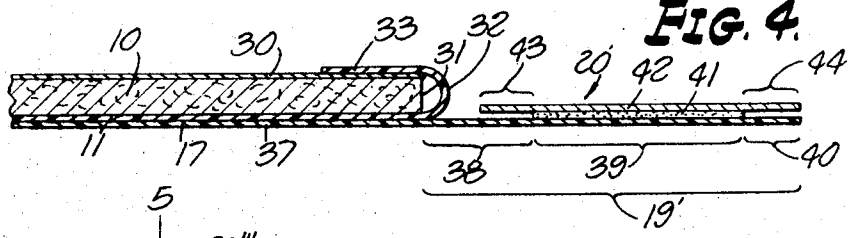

FIG. 4.

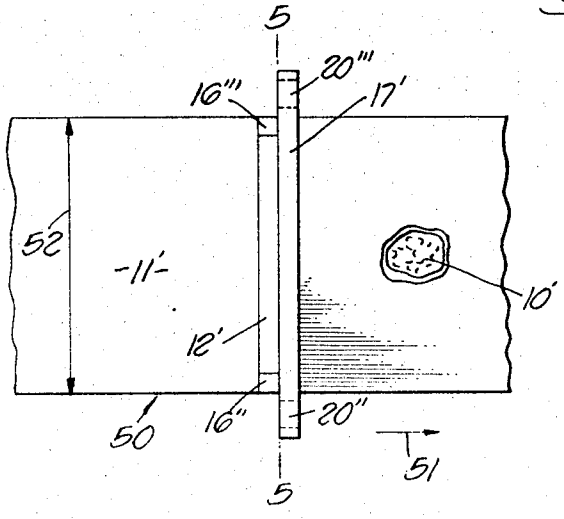

FIG. 5.

INVENTOR
John Julio Jones, Sr.

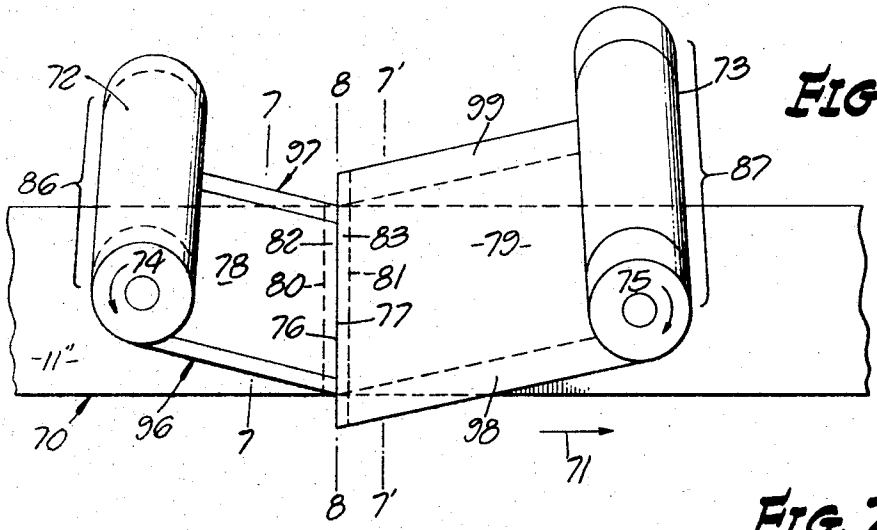

FIG. 6.

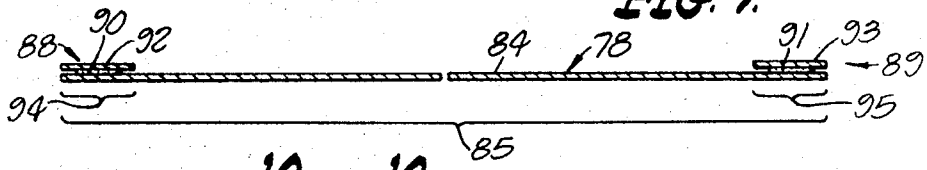

FIG. 7.

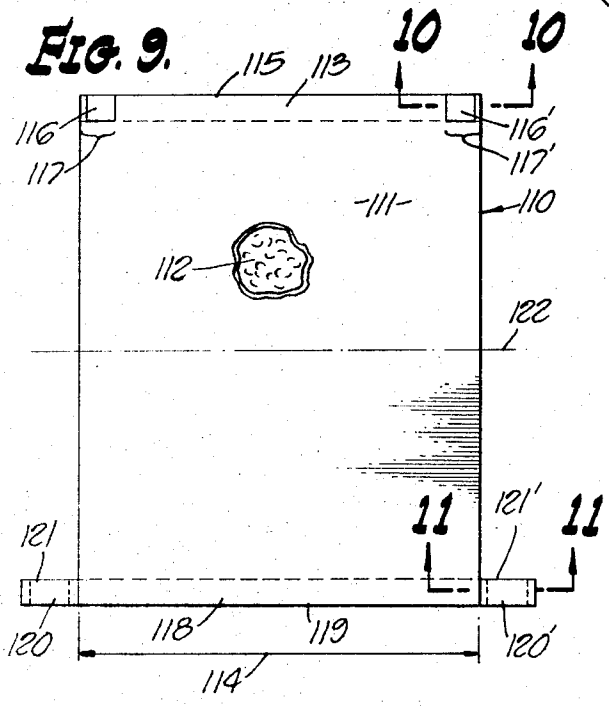

FIG. 9.

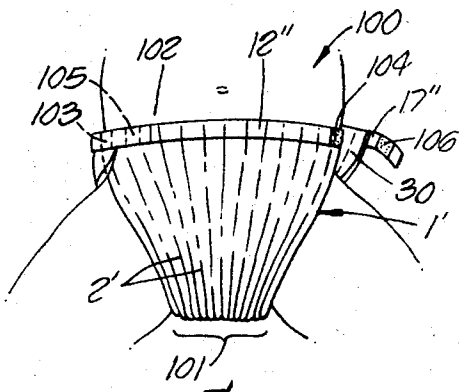

FIG. 8.

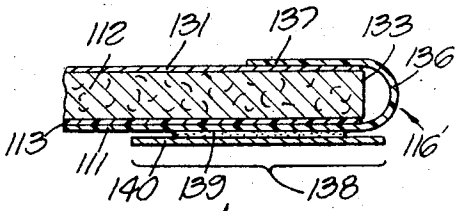

FIG. 10.

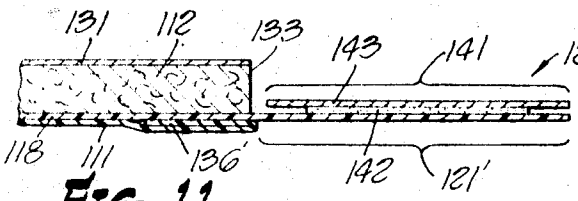

FIG. 11.

INVENTOR
John Leslie Jones, Sr.

PROCESS FOR MANUFACTURE OF INTEGRAL DIAPER WAIST BAND FASTENER

This is a division of application Ser. No. 867,505 filed Oct. 20, 1969, now U.S. Pat. No. 3,610,244.

CROSS REFERENCE TO A RELATED APPLICATION

This application is related to the U.S. patent application filed on this same date titled PLEATED DIAPER by the same sole inventor.

BACKGROUND OF THE INVENTION

It is well known that washable, reusable cloth diapers are worn to partially clothe a baby up to the age of about two years. The cloth diapers are traditionally secured on the baby torso by safety pin fasteners. Commercial single use, disposable baby diapers are now likewise secured on the baby body with safety pin fasteners. The separate safety pins can be lost, swallowed by a baby, and can puncture the baby's skin. This inventive improvement in waist band adhesive securing means as a diaper fastener device for single use, disposable baby diapers is very desirable, since it eliminates these hazardous problems.

SUMMARY OF THE INVENTION

This invention teaches a single use, rectangular area, pressure sensitive adhesive waist band securing means, suitable for holding the diaper on a baby's torso without pins. A first face of a thin, flexible, nonextensible, first waist band is permanently, completely secured to the exterior fluid resistant diaper membrane, and is disposed completely across the first diaper end normal to the diaper side, forming two first waist band terminus areas at the diaper sides. On the face of the first waist band terminus areas opposed to the absorbent diaper pad, each one of the pair of first waist band terminuses can have an adhesive securing means. Each adhesive securing means comprises a pressure sensitive adhesive coating area permanently secured to a first waist band terminus area, and the coating area is completely covered with a removable, protective release paper sheet area. A first face of a thin, flexible, nonextensible, second waist band is permanently secured to the fluid resistant diaper membrane disposed completely across and bonded to the second diaper end, normal to the diaper sides. The second waist band adhesive securing means has a pair of integral, nonextensible band short extensions, each one of the pair oppositely extending beyond each one of the pair of diaper sides. Each of the band short extensions has a pressure sensitive adhesive coating area permanently secured to the band short extension face which is adjacent to the fluid absorbtion side of the diaper. Each of the adhesive coating areas are completely covered by removable, protective release paper sheet areas. The pressure sensitive adhesive waist band securing means are formed from sheet stock components, which are formed into individual waist bands and bonded to a diaper web being continuously formed on an assembly line. The first and second waist bands are both positioned and bonded to the diaper web prior to cutting the diaper web into individual diapers, each diaper then having a pair of waist bands.

Included in the objects of this invention are:

First, to provide an integral pressure sensitive adhesive waist band securing means for a single use, disposable baby diaper.

Second, to provide a safe, simple, integral waist band securing means for holding a single use, baby diaper in a normal crotch enveloping position on a baby.

Third, to provide a single use, disposable diaper which is adapted to maximum placement of the fluid absorbent pad in a functional position in and around the crotch of a baby toddler.

Fourth, to provide a simple manufacturing process for a disposable baby diaper having pressure sensitive waist band securing means.

Fifth, to provide an economical process for manufacturing a pressure sensitive waist band securing means disposable baby diaper.

Further objects and advantages of this invention will become apparent in the following description to be read in conjunction with the accompanying drawing.

BRIEF DESCRIPTION OF THE DRAWINGS

FIG. **1** is a plan view of a single use, disposable, multiple accordion type pleated baby diaper, having integral adhesive diaper securing means for a baby's torso.

FIG. **2** is an elevational projective view of a multiple accordion pleated, single use, disposable diaper of FIG. **1**, now tightly folded as for packaging in a commercial retail carton.

FIG. **3** is an enlarged sectional view through **3—3** of FIG. **1**, illustrating the construction of the first waist band pressure sensitive adhesive securing means for the baby diaper.

FIG. **4** is an enlarged sectional view through **4—4** of FIG. **1**, illustrating the construction of the second waist band pressure sensitive adhesive securing means for the baby diaper.

FIG. **5** is a plan view illustrating the method of partially fabricating the modification of the first waist band and the second waist band on a moving diaper web.

FIG. **6** is a perspective view illustrating a further modification of the method of manufacturing the integral diaper of this invention.

FIG. **7** is an enlarged cross sectional view through **7—7** or **7'—7'** of FIG. **6**, illustrating the structure of the waist band sheeting construction.

FIG. **8** is a view of the integral diaper of this invention secured in functional position on a baby's torso.

FIG. **9** is a plan view of another diaper modification illustrating further diaper adhesive securing means of this invention.

FIG. **10** illustrates further cross sectional view details of the modified first waist band adhesive securing means through **10—10** of FIG. **9**.

FIG. **11** illustrates further cross sectional view details of the modified second waist band adhesive securing means through **11—11** of FIG. **9**.

DESCRIPTION OF THE PREFERRED EMBODIMENT

Referring to FIG. **1** in detail, a single use, disposable, integral diaper **1** has multiple, accordion folded pleats **2** disposed parallel to the center line **3** and disposed normal to the center line **4**. The diaper **1** is rectangular in area, having a length axis **5** and a width axis **6**. Each of the multiple pleats **2** has a pair of pleat sides **7** and **8**, and each pleat side **7** and **8** can have equal pleat width **9**. The upper face of the diaper fluid absorbent pad **10**, shown in partial sectional view, has a moisture

resistant or fluid impermeable, exterior, thin membrane sheet **11** which covers and encloses one face of the fluid absorbent pad **10.** The thin membrane sheet **11** can be a very thin, fluid impermeable plastic film or a chemically treated, wet strength paper base sheet, also resistant to fluid penetration.

The diaper **1** illustrated is rectangular in planar shape, but it can also be a planar square of the required dimensions. A square is to be considered a special rectangular shape.

A first face of a thin, flexible, nonextensible, first waist band **12** is permanently, completely secured to the exterior face of the thin membrane sheet **11,** parallel to the width axis **6** at the first diaper end **13.** The band **12** is disposed completely across the diaper end **13,** having a pair of opposed band terminuses **14, 14'** which terminate at the opposed diaper sides **15, 15'.** The first waist band **12** has a pair of first waist band adhesive securing means **16, 16',** each means including a pressure sensitive adhesive coating area permanently secured on the second face of waist band **12** on the band terminuses **14, 14'.** Each adhesive coating area can be equal in width to the narrow waist band width **21,** and is completely covered by a removable protective release paper sheet, as will be described in detail later.

A first face of a thin, narrow, flexible, nonextensible, second waist band **17,** is shown permanently secured to the exterior face of the fluid resistant diaper membrane **11,** and disposed completely across the second diaper end **18,** parallel to the diaper fold axis **4.** The second waist band **17** has a pair of integral, nonextensible band short extensions **19, 19',** oppositely extending beyond the respective diaper sides **15, 15'.** The band short extensions **19, 19'** form a portion of the pressure sensitive adhesive coating securing means **20, 20'** which have pressure sensitive adhesive faces, each cooperatively adjacent to the fluid absorbtive side of the diaper. Each pressure sensitive adhesive coating area can be equal in width to the waist band width **22,** and is completely covered by a removable protective release paper sheet, to form the second waist band adhesive securing means **20, 20'.**

FIG. **2** illustrates the compact volume of a single use, disposable, integral diaper **1,** accordion pleated folds closed in a position suitable for commercial packing in a retail carton with other diapers **1.** The waist band short extension **19** is shown extended from the diaper pleat **7,** with the second band adhesive securing means **20** disposed on the obverse band side. The multiple, accordion fold pleats **2** are contiguous, with the sides **7** and **8** adjacent to each other. The first waist band **12** is shown secured to the diaper end **13,** and the first band adhesive securing means **16** is shown disposed on band **12.** The second waist band **17** is shown secured to the directly opposed diaper end **18.**

FIG. **3** illustrates the diaper **1** construction through **3—3** of FIG. **1,** wherein the first waist band **12** is shown bonded to the exterior face of the thin membrane **11.** The sectional view also illustrates the typical well known construction of single use diapers, having a nonwoven, porous cover sheet **30** which permits absorbtion of a baby's waste products in the absorbent pad **10,** made of fluffed wood pulp, tissue paper, cotton or rayon fibers or the like. The typical fluid impermeable exterior, thin membrane sheet **11** folds over the edge **31** of absorbent pad **10** at fold **32,** and the flap **33** of membrane sheet **11** is bonded to the underlying nonwoven sheet **30.** The bonding of flap **33** to sheet **30** may be by heat seal or adhesive, as is well known in the prior art.

The first waist band **12** is a thin, flexible, nonextensible composite structure which is soft and warm to human touch. Band **12** is not rigid or sharp edged, eliminating cutting the baby skin. The nonextensible composite structure of band **12** typically can be a laminate of a thin plastic film and an open mesh woven or nonwoven fiber gauze; or it can be a thin plastic film laminated to paper, typically 50–100 lb. weight. The composite structure is specifically adapted to provide the nonextensibility property of band **12.** The plastic film component of band **12** should be chemically compatible and preferably heat sealable to the membrane sheet **11,** although a cement or adhesive can be used to bond **11** and **12** in a known technique. The nonextensibility, softness and the construction properties of band **12** and band **17** are to be fully equivalent to each other.

On the band terminus **14'** of band **12,** a pressure sensitive adhesive coating area **34** is permanently secured to and covers the band width **21,** for a coating area length **35.** A thin release paper sheet area **36** at least completely covers all of the pressure sensitive adhesive coating area **34,** and is easily removed therefrom with finger tips. The combination of the adhesive coating area **34,** permanently secured to a portion of waist band **12,** and covered by the release paper sheet area **36,** is the first waist band adhesive securing means **16'.** The adhesive securing means **16** is equivalent to the adhesive securing means **16'** in chemical and mechanical structure, one being the geometrical mirror image of the other.

FIG. **4** illustrates the construction of diaper **1** through **4—4** of FIG. **1,** wherein the second waist band **17** is shown bonded to the membrane **11.** The sectional view again illustrates the well known typical single use diaper construction, in which the nonwoven porous cover sheet **30** is secured to the overlapping flap **33** of the sheet **11,** as by heat seal or adhesive bond. The second waist band **17** has a nonextensible mechanical structure equivalent to the nonextensible structure of the first waist band **12.** The plastic film component of band **17** should be chemically compatible, and preferably heat sealable to the membrane sheet **11,** although a cement or adhesive can be used to bond **11** and **17** by well known techniques. The short waist band extension **19'** is an integral, continuous extension of the portion **37** of the second waist band **17** secured to the membrane **11.** The extension **19'** can have three length sections **38, 39,** and **40,** which together form the total length of **19'.** The extension sub-length **39** is completely, permanently covered over the band width **22** with a pressure sensitive adhesive coating area **41.** A thin, release paper sheet area **42** completely covers all of the pressure sensitive adhesive coating area **41,** extending beyond **41** on both of its ends to form the dry alleys **43,44.** The dry alleys **43,44** serve as handles for the ready removal of the sheet area **42** with finger tips.

The combination **19'** as the sub lengths **38, 39** and **40,** together with the pressure sensitive adhesive coating area **41** and the thin release paper sheet area **42,** together form a second waist band adhesive securing means **20'.** The adhesive securing means **20** is equivalent to the adhesive securing means **20'** in chemical and

mechanical structure, one being the geometrical mirror image of the other.

The nonextensibility of waist bands **12** and **17** is an important property of this invention. Since the fluid impermeable membrane sheet **11** is typically thin plastic, e.g., 0.0005 inch thick polyethylene, it will readily cold stretch on tensile loading. The nonextensible waist bands **12** and **17** are substantially thicker, e.g. 0.004–0.010 inches, and their band widths **21** and **22** are typically ¼ to 1 inch. Thus in application of the single use diaper, the nonextensible waist bands **12** and **17** provide structural strength in terms of no elongation of the securing waist bands, preventing the integral diaper **1** from structurally stretching or distending at the baby's waist and then falling off the baby's torso.

The release paper sheet areas **36** and **42**, and the like, are well known paper sheet structures, chemically treated on at least one sheet face to provide a treated face which will adhere to a pressure sensitive adhesive coating area, and protect the coating area, yet with no permanent stick to the adhesive. The release paper, **36** and **42**, and the like, can be readily removed with finger tips. Typically, **36** and **42** are 0.004 to 0.010 inch thick sheets.

This invention also teaches a simple process of fabricating the single use diaper **1**, or the like, adapted to continuously fabricating diapers from an endless diaper web continuously formed on an assembly line. In FIG. **5**, an endless, moving diaper web **50** is shown moving in the direction **51**. A thin membrane sheet **11'** is shown uppermost on web **50**, covering the absorbent pad **10'** shown in a partial sectional view. The first waist band **12'**, having first band adhesive securing means **16''**, **16'''** uppermost, is bonded to the membrane **11'**. The second waist band **17'** is also bonded to the membrane sheet **11'** of the continuous web **50**, and has the second waist band adhesive securing means **20''** and **20'''** facing downward. By bonding the bands **12'** and **17'** adjacently parallel, and parallel to the web width **52**, the web **50** can be completely severed at the center line **5—5** between bands **12'** and **17'**, can provide a first waist band **12'** on one diaper end **13'**, or the like for one diaper; and a second waist band **17'** on a second diaper end **18'**, or the like, on another diaper.

FIGS. **6** and **7** together illustrate the diaper manufacturing process in further detail. In FIG. **6** the single use diaper, endless web **70** is moving in the direction **71**, the thin membrane sheet **11''** shown uppermost, as in FIG. **5**. Two rolls **72** and **73** of previously prepared waist band stock sheeting are shown unreeling stock sheet in the respective reel directions **74** and **75**. The rolls **72** and **73** are positioned above the web **70**, and are each adapted to form a sheet terminus **76** and **77** respectively at the center line **8—8**. The waist band stock sheetings **78** and **79**, of rolls **72** and **73** respectively, are completely severed at the respective lines **80** and **81**, to form a pair of spaced and positioned potential waist bands **82** and **83** respectively on the web **70**. On bonding of the newly severed bands **82** and **83** on the web **70**, by standard heat sealing or cementing techniques, the severed and bonded bands derived from bands **82** and **83**, become equivalent to the pair of waist bands **12'** and **17'** of FIG. **5**.

The waist bands stock sheetings **78** and **79**, as sectioned at **7—7** and **7'—7'** in FIG. **6**, as shown in cross sectional detail in FIG. **7**. The sheetings **78** and **79** are equivalent in cross sectional structure, as shown in FIG. **7**. The non-extensible, thin, flexible water resistant, bondable sheeting **84** has a web width **85**. The web width **85** is adapted to become the required values for the roll widths **86** and **87** of the respective rolls **72** and **73**. The waist band adhesive securing means **88** and **89** each comprise the pressure sensitive adhesive coating areas **90** and **91** respectively, covered by the thin, flexible, release paper sheet areas **92** and **93** respectively disposed at the opposed web margins **94** and **95** respectively of the sheet **84**. Thus, referring back to FIG. **6**, the first waist band adhesive securing means **96** and **97** are shown uppermost on the stock sheet **78**; and the second waist band adhesive securing means **98** and **99** are indicated on the under side of the stock sheet **79**.

Prepared rolls of stock sheeting **78**, or the like, are fabricated in the required width, and applied to the web **70**, or the like. Obviously, the severing of web **70**, or the like, and of stock sheetings **78** and **79** at **80** and **81**, or the like, may be accomplished by well known processes, utilizing moving or stationary reciprocating knife blade cutters, synchronized with the diaper web and roll velocities of motion. The accordion fold pleats of diaper **1**, or the like, may be formed by well known means, and typically can be ½ to 1 inch wide per fold width **9**.

In application of this integral diaper, no conventional safety pins are required. The pleats **2** of diaper **1** of FIG. **2** are partially opened and the center line **3** of the diaper laid parallel and underneath the baby's backbone line in the conventional, well known manner. The pleats **2** remain constricted in opening, in and around the baby's crotch, placing a maximum of pleated, folded absorbent pad **10** directly adjacent the positions on the baby's torso which emit waste products. The pleats **2** of diaper **1** are fully distended at the first and second waist bands **12** and **17**, or the like.

As shown in FIG. **8**, the pleats **2'** of diaper **1'** form a fan-shaped distension on the baby's body **100**, being relatively compressed in and around the baby's crotch **101**; and being openly distended over the baby's abdomen **102**. The first waist band **12''** is shown stretched to its full length around the baby's abdomen **102**, and the second waist band **17''** is also fully distended and overlaps the first waist band **12''**. The first waist band adhesive securing means **16** and **16'** have been modified by removal of the release paper sheet areas **36**, or the like, and by adhesively bonding the band **12''** interiorly to the non-woven porous sheet **30**, or the like, as at **103** and **104**. The second waist band adhesive securing means **20** and **20'** have also been modified by removing the release paper sheet areas **42**, or the like, and adhesively bonding the adhesive coating areas **41**, or the like, to the first waist band to form adhesive bonds **105** and **106** on the band **12''**.

Thus the integral diaper **1'** requires no safety pin fasteners to secure the diaper on the baby's torso, and places the maximum mass of absorbent pad in a position to collect the baby's waste products. The newborn baby is relatively inactive physically and will not necessarily require the adhesive bond securing means **16** and **16'** on the first waist band **12**. Hence, for the smallest size diaper, typically an area of 10 inches × 14 inches, the securing means **16** and **16'** are omitted. For the more active babies, normally 12 lb. and up in weight, the first waist band adhesive securing means **16** and

16′, as well as the second waist band securing means **20** and **20′** are both required. The two sets of waist band securing means **16, 16′** and **20, 20′** are particularly necessary for active toddlers, to prevent the thin, fluid impermeable membrane **11,** or the like, from cold stretching while the baby moves, and thus allows the loose diaper to drop off the baby's abdomen.

In the integral diaper modification illustrated in FIGS. **1–4,** and the process illustrated in FIGS. **5–7,** the first and second waist bands are secured exteriorily on the membrane sheet face, opposed to the membrane sheet face adjacent to the absorbtion pad. By further modifying the integral diaper construction, the first and second waist bands can be secured to the membrane sheet face which is coadjacent the absorbent pad.

Thus, the first and second waist bands can be disposed coadjacent the absorbent pad, as in the diaper construction of FIG. **9.** The integral, rectangular area diaper **110** is shown in partial plan view, the thin, fluid resistant membrane sheet area **111** is shown uppermost. The fluid absorbent pad **112** is shown in partial sectional view lying below membrane area **111.** The first waist band **113** is shown just underlying the membrane sheet area **111,** and the band **113** is completely bonded across the diaper width **114** to the sheet area **111,** at the first diaper end **115.** The first waist band adhesive securing means **116** and **116′** are shown formed on the band terminuses **117** and **117′.**

The second waist band **118** is also shown partially disposed underneath the membrane sheet area **111,** coadjacent one face of the fluid absorbent pad **112.** The waist band **118** is likewise bonded the width **114** of the second diaper end **119.** The second waist band adhesive securing means **120** and **120′** are disposed on the integral second waist band short extensions **121** and **121′** respectively. The diaper **110** is folded about the diaper fold axis **122** on placement on a baby's torso.

FIG. **10** shows in cross sectional view through **10—10** of FIG. **9,** the construction of the first band adhesive securing means **116′.** The nonwoven, porous cover sheet **131** is disposed coadjacent and completely covers the fluid absorbent pad 1/2, both components terminating at the pad edge **133.** The thin, narrow flexible, first waist band **113** is bonded to the thin, fluid impermeable membrane sheet area **111,** as by heat sealing. The membrane sheet area **111** has a fold **136,** terminating in a flap **137,** which is overfolded and bonded to the cover sheet **131.** The first waist band adhesive securing means **116′** is shown to consist of the required length **138** of membrane sheet area **111,** the pressure sensitive adhesive coating area **139,** and the overlying thin, flexible release paper sheet area **140.** Again the thin, flexible nonextensible first waist band **113,** when bonded to the thin, membrane sheet area **111,** prevents the membrane sheet area **111** from cold stretching at the diaper end **115.**

The cross sectional view through **11—11** of FIG. **9** is further illustrated in FIG. **11,** showing the construction of the second waist band adhesive securing means **120′.** Again, the nonwoven, porous cover sheet **131** coterminates with the absorbent pad **112,** at the pad edge **133.** The thin, Flexible, nonextensible, second waist band **118** has a second waist band short extension **121′,** which is integral with **118.** The band **118** is bonded to the fluid impermeable membrane sheet area **111,** and also to the membrane fold **136′,** which has been folded under and sealed to band **118.** The second waist band adhesive securing means **120′** consists of the required length **141** of the extension **121′,** the pressure sensitive adhesive coating area **142** and the overlying protective layer of release paper sheet area **143.**

The first waist band adhesive securing means **117** and **117′** are fully equivalent in their construction; as securing means **120** and **120′** are fully equivalent in their construction.

The first waist band adhesive securing means and the second waist band securing means are disposed in use, as in FIG. **8,** to provide four separate bonded adhesive fasteners. The four bonded fasteners provide adjustable four point suspension on the nonextensible waist bands, which can be adapted to secure the waist bands to the necessary degree of tightness on the baby's abdomen. Since low diaper raw material costs are very important in developing a low priced, disposable diaper in wide use, the thickness of the fluid impermeable membrane sheet area is an important raw material cost. A thin, cheaper, fluid impermeable membrane, typically 0.0003 inch thick, can be used with the nonextensible waist bands, instead of the thicker 0.0015 inch membrane sheet area. The adjustable four point suspension is necessary for the active baby learning to stand in a crib and for the baby beginning to walk, for activity results in cold stretching of the thin membrane and loss of any significant waist band control and holding tension in an unimproved disposable diaper. In fact, a four point suspension is necessary for an active baby, crib stander or walker, and two adhesive bonded fasteners are not sufficient to hold a baby diaper on during this activity.

Although the integral waist band fasteners of this invention have been described in conjunction with a pleated diaper of my copending U.S. patent application, filed as of this date, the integral waist band fasteners invention can be practiced alone and without the pleated diaper invention.

Although the absorbent pad, typically **10** of this disclosure, is shown substantially coextensive in area, with the thin membrane, typically **11,** the absorbent pad for entrapping waste fluids can be smaller in area than the membrane. The absorbent pad will be typically centrally disposed along the diaper center line, typically center line **3.**

Obviously many modifications in integral diapers can be made in the light of these teachings. It is therefore understood that within the scope of the appended claims, the invention may be practiced otherwise than as specifically described.

I claim:

1. A process for manufacture of single use, disposable, integral baby diapers comprising:

a. forming a waist band stock sheeting of the required web width, having two waist band adhesive securing means disposed on one web face, at opposed web width edges of said sheeting;

b. disposing a first waist band stock sheeting supply of the required web width and a second waist band stock sheeting supply of the required web width symetrically parallel, with respect to each aforesaid web width, across the diaper web width of a moving diaper production line;

c. severing a narrow waist band from each of said first waist band stock sheeting supply and said second waist band stock sheeting supply;

d. disposing said narrow bands from each of said first waist band stock sheeting and said second waist band stock sheeting symetrically with respect to said diaper web width and said narrow bands web widths, and in their respective permanent band positions on said diaper web width;

e. bonding said narrow bands to said diaper web width, at spaced diaper length intervals; and

f. completely severing said diaper web width at said spaced diaper lengths to provide diapers having a first waist band and a second waist band.

* * * * *