(No Model.)

R. W. LYSLE.

REFRIGERATING PIPE COVERING.

No. 590,459. Patented Sept. 21, 1897.

Fig. 1.

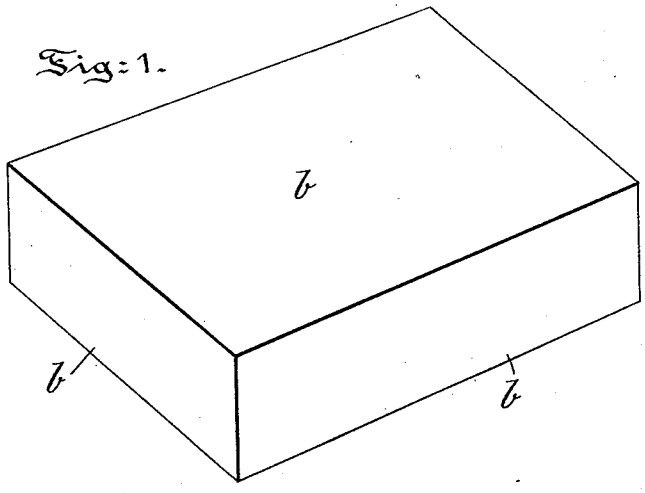

Fig. 2.

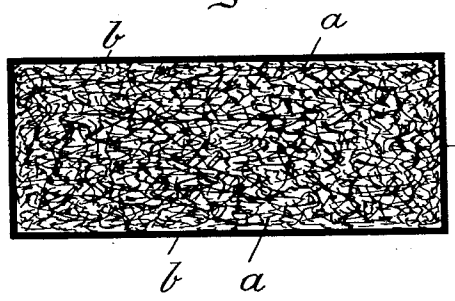

Fig. 4.

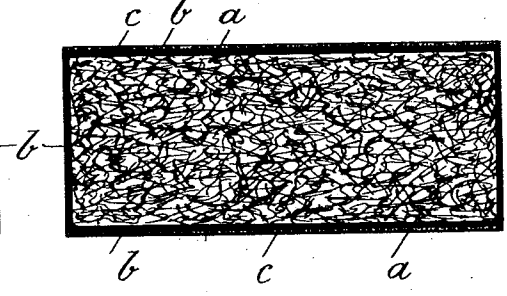

Fig. 3.

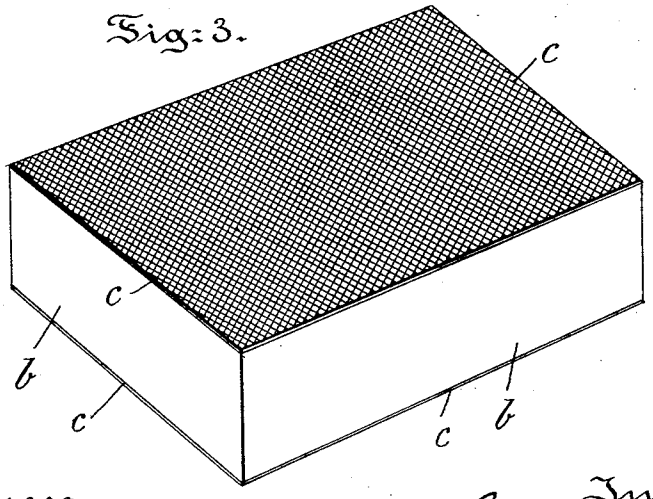

Witnesses:
Thomas M. Smith.
Richard C. Maxwell.

Inventor:
Robert Willis Lysle.
By J. Walter Douglass
Attorney

THE NORRIS PETERS CO., PHOTO-LITHO., WASHINGTON, D. C.

UNITED STATES PATENT OFFICE.

ROBERT WILLIS LYSLE, OF PHILADELPHIA, PENNSYLVANIA, ASSIGNOR TO THE MARSDEN COMPANY, OF CAMDEN, NEW JERSEY.

REFRIGERATING-PIPE COVERING.

SPECIFICATION forming part of Letters Patent No. 590,459, dated September 21, 1897.

Application filed October 24, 1895. Renewed February 20, 1897. Serial No. 624,489. (No model.)

To all whom it may concern:

Be it known that I, ROBERT WILLIS LYSLE, a citizen of the United States, residing at the city of Philadelphia, in the county of Philadelphia and State of Pennsylvania, have invented certain new and useful Improvements in Brine and other Refrigerating Pipe Insulating-Coverings, of which the following is a specification.

My invention has relation to insulating-coverings for brine and other refrigerating pipes, and in such connection it relates particularly to the production and arrangement of such a covering.

The principal objects of my invention are, first, to provide an insulating casing or covering for pipes carrying liquids used for refrigerating, ice-making, and the like and similar pipes which shall be simple, durable, efficient, comparatively inexpensive, and easily placed in position or detached from the pipes as occasion requires; second, to provide an insulating casing or covering for pipes carrying liquids used for refrigerating, ice-making, and the like and similar pipes, consisting of a layer of hair felt or other spongy non-conducting material completely enveloped in a covering of asphalt, bituminous, rubber, or similar elastic and pliable waterproofing material or compound, and, third, to provide an insulating casing or covering for pipes carrying liquids used for refrigerating, ice-making, and the like and similar pipes in which a layer of hair felt or other spongy non-conducting material is completely enveloped in a coating of asphalt, bituminous, rubber, or similar elastic pliable waterproofing material or compound, which envelop or coating is backed with flexible textile material.

My invention consists, stated in general terms, of a refrigerating or similar pipe-insulated covering produced and adapted to be employed in substantially the manner hereinafter described and claimed.

The nature, characteristic features, and scope of my invention will be more fully understood from the following description, taken in connection with the accompanying drawings, forming part hereof, and in which—

Figure 1 is a perspective view of the improved insulating-covering without a backing of flexible fibrous or textile material. Fig. 2 is a cross-sectional view of the sheet of the insulating-covering illustrated in Fig. 1. Fig. 3 is a perspective view of a sheet of the improved insulating-covering with a backing of flexible fibrous or textile material, and Fig. 4 is a cross-sectional view of the sheet of such a covering as is illustrated in Fig. 3.

Referring to said drawings, *a* represents a sheet or layer of hair felt or other spongy heat non-conductor completely enveloped or inclosed by a layer *b* of asphalt, bitumen, rubber, pitch, tar, or other similar elastic, pliable, and waterproofing compound or product. This envelop *b* does not saturate completely the hair felt *a*, but merely coats with a thin layer of waterproofing material all of the exposed surfaces, corners, and edges of the sheet or layer, as illustrated in Figs. 2 and 4, leaving the interior of the sheet *a* in its normal condition.

To cover, coat, or envelop the sheet *a* with the material *b*, the sheet *a* may be dipped, painted, or otherwise subjected to the waterproofing compound *b* in any desired manner, care being taken, however, that the waterproofing compound *b* does not saturate completely or to an injurious extent the sheet *a*, but simply envelops its entire external surface with a comparatively thin layer of waterproofing, pliable, and elastic material *b*.

In Figs. 3 and 4 I have shown a sheet of hair felt *a* or similar pliable heat non-conducting material coated or enveloped in a thin layer of waterproof, spongy, and elastic compound *b*, and provided on its upper and lower faces with a layer of fibrous textile material *c*. This backing *c* is not essentially necessary, but it serves to confine the waterproof material *b* to the felt *a*.

The advantages of my improved pipe-insulating covering are obvious. As is well known, hair felt and similar spongy materials are excellent heat non-conducting materials, being porous, flexible, and elastic. Moreover, hair felt and like materials readily absorb moisture from the atmosphere and rapidly under such circumstances deteriorate and become useless. It has hitherto been

thought that by saturating this heat non-conducting material with resin and similar non-pliable non-elastic waterproofing material a non-conducting covering which was waterproof could be obtained, but experience has demonstrated that the saturation of the felt with resin and similar materials destroys as effectually as does the absorption of moisture the non-conducting character of the felt. I have discovered that by completely enveloping the hair felt with a thin layer of elastic or pliable waterproofing compound the non-conducting and spongy character of the felt is preserved and a flexible waterproof covering with effectual insulating properties results, which covering effectually and permanently protects the surface to be covered from the approach of either a high or low temperature.

Having thus described the nature and objects of my invention, what I claim as new, and desire to secure by Letters Patent, is—

1. An insulating-covering for refrigerating and similar pipes, consisting of a sheet or layer of hair felt completely enveloped or inclosed by a thin layer or coating of asphaltic material, substantially as and for the purposes set forth.

2. An insulating-covering for brine and similar refrigerating pipes, consisting of a sheet or layer of hair felt completely enveloped or inclosed by a thin layer or coating of pliable, elastic, waterproofing material and backed with a layer of fibrous textile material, substantially as and for the purposes set forth.

In testimony whereof I have hereunto set my signature in the presence of two subscribing witnesses.

ROBERT WILLIS LYSLE.

Witnesses:
THOMAS M. SMITH,
RICHARD C. MAXWELL.