Sept. 4, 1934. P. O. BEESON 1,972,127

TAPERED SHINGLE AND PROCESS OF MAKING THE SAME

Filed June 5, 1931

Fig. 1.

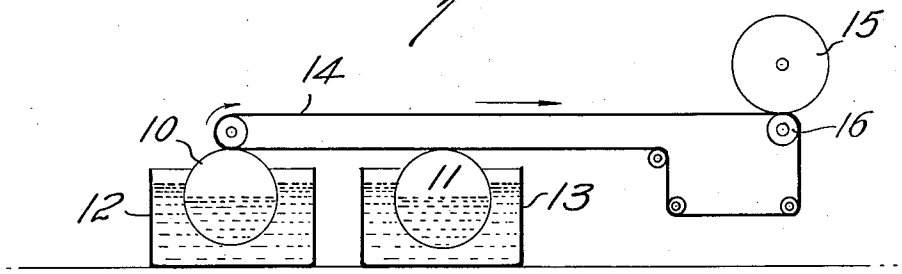

Fig. 2.

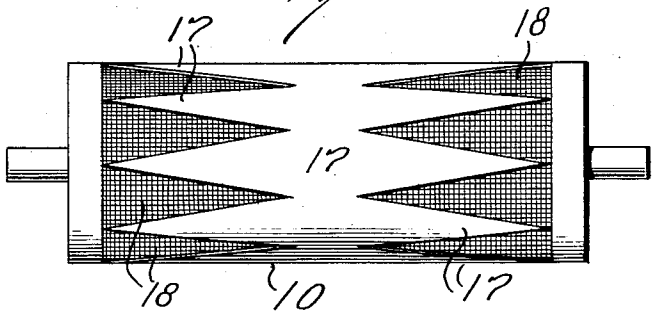

Fig. 5.

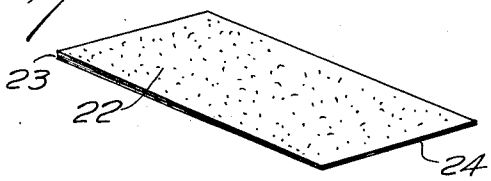

Fig. 3.

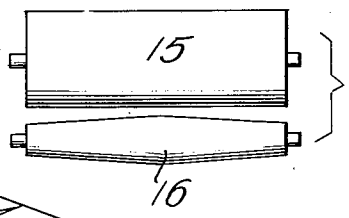

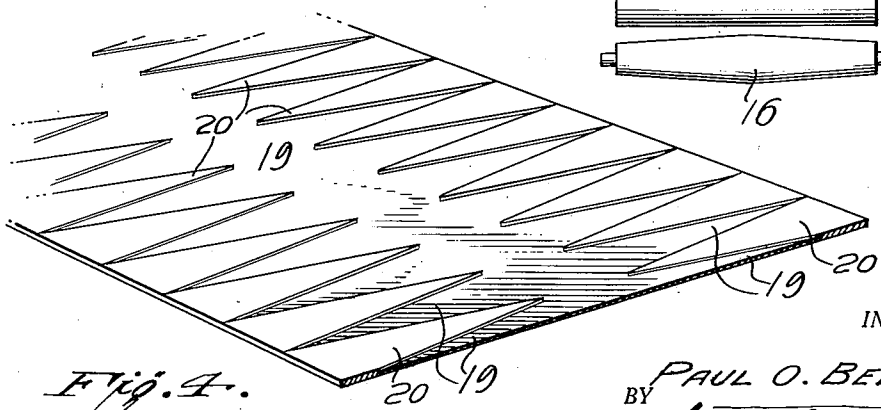

Fig. 4.

INVENTOR

BY PAUL O. BEESON,

ATTORNEY.

Patented Sept. 4, 1934 1,972,127

UNITED STATES PATENT OFFICE

1,972,127

TAPERED SHINGLE AND PROCESS OF MAKING THE SAME

Paul O. Beeson, Joliet, Ill., assignor to The Ruberoid Co., New York, N. Y., a corporation of New Jersey

Application June 5, 1931, Serial No. 542,296

3 Claims. (Cl. 92—42)

This invention relates to the manufacture of tapered laminated fibre-cement products such as shingles, slabs, plates, or the like articles.

The invention is intended primarily for use in the manufacture, on a paper making machine, of tapered laminated shingles from a pulp or wet mush composed of hydraulic cement and fibrous material, such as asbestos-fibre.

The ordinary type of paper making machine is incapable of forming tapered products. It is one of the objects of my invention to provide a method and apparatus whereby such products may be made on a paper machine.

Broadly speaking, the invention embodies the picking up on a take-up roll of a film of pulpy fibre-cement material and depositing the film in a continuous layer of uniform thickness on an endless belt or blanket; the picking up of the pulpy fibre-cement material on a second take-up roll which roll is so formed as to pick up the pulp only on recurring predetermined portions of its surface and depositing the pulp so picked up by these predetermined portions on the previously formed continuous layer. The layers thus deposited on the blanket are wound up into a laminated cylinder on an accumulator roll, and is there subjected to the pressure of a tapered presser roll. When the material on the accumulator roll has been wound up into a cylinder of the desired thickness, it is stripped from the roll and split open into sheet form. The sheet may then be cut, pressed, finished and worked in any manner known to the art.

Further objects and results of the invention will clearly appear from the following description thereof, reference being had to the accompanying drawing, in which:—

Figure 1 is a diagrammatic illustration of the method and apparatus used in carrying out the invention;

Fig. 2 is a view of a take-up roll equipped with deckle material to cover those portions of its surface upon which it is not desired to pick up the pulp;

Fig. 3 is a front view of the accumulator roll and the presser roll;

Fig. 4 is a perspective of the uniform pulp layer with the recurring pulp portions deposited thereon; and,

Fig. 5 is a perspective view of a laminated tapered shingle or plate made according to the invention.

Referring now to the drawing, it will be seen from Fig. 1 that I utilize a standard type of endless belt or blanket 14 which passes over a vat 13 in which a usual type of take-up roll 11 operates to pick up and deposit a uniform and continuous layer 19 of the pulpy asbestos-cement material contained in the vat on the blanket 14.

Departing now from the usual structure, this blanket passes over a second vat 12 which is equipped with a special type of take-up roll 10. The periphery of this roll 10 is partially covered with deckle 17 so as to leave uncovered portions 18 of substantially triangular or tapering form upon which uncovered portions alone the pulpy asbestos-cement material will be picked up. The deckle 17 may be of any suitable material or it may be formed by applying to the surface of the roll, in the desired pattern, a water insoluble coating, such as an oil paint, which will adhere to the wire mesh of the roll but to which the wet pulp will not adhere.

The purpose of this second roll 10 is to deposit and superimpose on the uniform layer 19 a series of triangular or tapering portions 20, these portions 20 extending transversely of the layer 19 and being deposited thereon in predetermined recurring sequence as is clearly shown in Fig. 4.

While the portions 20 are shown with their bases extending parallel to and flush with the edges of the layer or web 19 and with their altitudes extending inwardly from said edges it is to be understood that this arrangement can be reversed and said portions so deposited that their bases will abut along the median line of the web 19 and their altitudes extend outwardly toward the longitudinal edges of the web. In the one case a tapered sheet of double width will finally be formed having its greatest thickness along the longitudinal edges of the web and its least thickness in the middle. In the other case a tapered double sheet will be formed having its greatest thickness in the middle. These sheets are intended eventually to be cut through the middle to form single sheets. Where it is desired initially to form sheets of single width only one recurring series of portions 20 will be deposited on the web or layer 19.

The continuous web thus formed is wound up on the accumulator roll 15 of the paper making machine. In winding the web, due to the gradual increase of diameter as it is being wound, the recurring portions 20 of the several laminations will fall in different positions relatively to one another so as to build up a laminated cylinder of substantially uniformly tapering cross section. While the material is being wound it is acted upon by the tapered presser roll 16 which

serves to assist in producing the tapering form and to compact the layers.

When the material has been built up to the desired thickness or caliper, it is split lengthwise, stripped from the roll, and opened out in sheet form. The sheet may then be utilized to form shingles, plates, or like articles of tapered cross section and of various shapes.

One of the products is shown in Fig. 5 wherein 22 is a laminated shingle of asbestos-cement, thicker at its butt 23 than at the opposite end 24, and tapering gradually from its thicker end to its thinner end.

While I have shown a paper machine having two take-up rolls, it is to be understood that a multiple take-up roll machine may be employed and that the increments may be progressively applied to the continuous layer, and that other variations may be made without departing from the spirit or scope of the invention as defined in the claims.

What I claim is:—

1. The process of making a tapered laminated fibre-cement product which comprises picking up pulpy fibre-cement material on a cylinder roll and depositing the material in a continuous imperforate web on a moving blanket, picking up like pulpy fibre-cement material on a second cylinder roll having portions only capable of picking up the material, which portions are of uniformly varying width breadthwise of the web, depositing said portions of varying width in regular order on the web, and winding said web with the deposited portions on an accumulator roll to form laminations in which the deposited portions of varying width fall in different positions relatively to one another.

2. The process of making a tapered laminated fibre-cement product which comprises picking up pulpy fibre-cement material on a cylinder roll and depositing the material in a continuous imperforate web on a moving blanket, picking up like pulpy fibre-cement material on a second cylinder roll having portions only capable of picking up the material, which portions are of uniformly varying width breadthwise of the web, depositing said portions of varying width in regular order on the web, and winding said web with the deposited portions on an accumulator roll to form laminations in which the deposited portions of varying width fall in different positions relatively to one another, and subjecting the material on the accumulator roll to the pressure of a uniformly tapered presser roll whereby said laminations with the deposited portions are built up into a substantially uniformly tapering product.

3. A tapered laminated shingle of homogeneous fibre-cement composition comprising a plurality of laminations of uniform widths, each lamination having superimposed portions of varying widths, said superimposed portions varying in width from one end of the shingle towards the other, and being disposed in different positions relatively to one another.

PAUL O. BEESON.