Oct. 20, 1942. C. G. EISENBERG, JR 2,299,617

ADAPTER PLUG FOR ELECTRIC OUTLETS

Filed Aug. 4, 1941

Fig. 1.

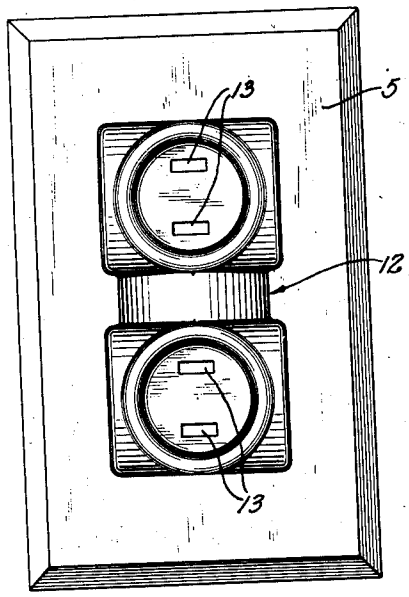

Fig. 2.

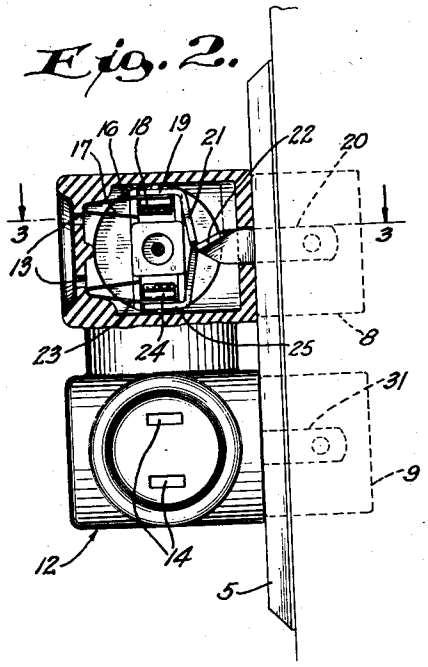

Fig. 4.

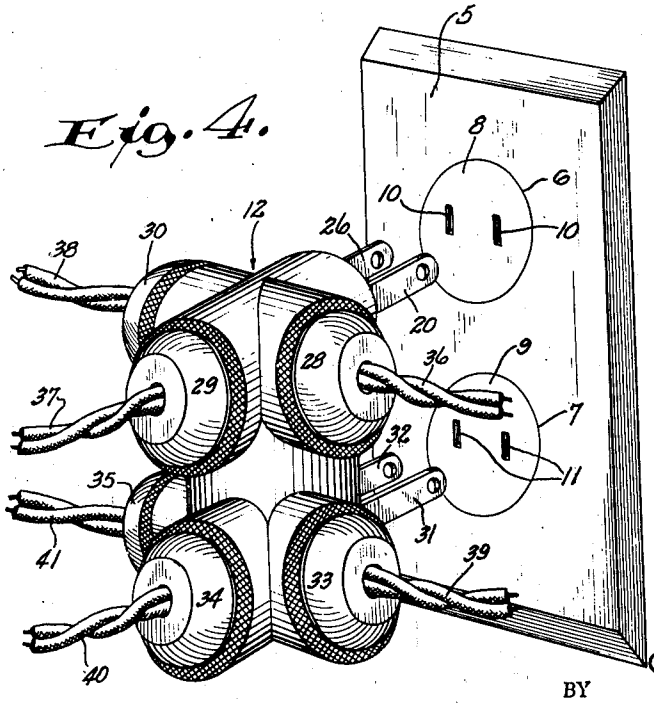

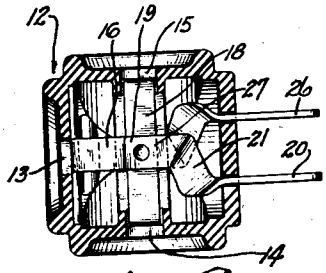

Fig. 3.

INVENTOR.
Charles G. Eisenberg Jr.
BY
Morsell & Morsell
ATTORNEYS.

Patented Oct. 20, 1942

2,299,617

UNITED STATES PATENT OFFICE

2,299,617

ADAPTER PLUG FOR ELECTRIC OUTLETS

Charles G. Eisenberg, Jr., Wauwatosa, Wis.

Application August 4, 1941, Serial No. 405,334

6 Claims. (Cl. 173—334)

This invention relates to improvements in adapter plugs for electric outlets.

It is customary, at the present time, for electric outlets to be provided in pairs and fitted with a wall plate exposing two spaced sets of openings for the reception of two appliance plugs, each plug having a pair of conductor prongs. Frequently, however, it is necessary or desirable to connect more than two electrical devices to a wall plate. In such case it is customary to utilize an adapter plug popularly termed a cube tap, which has a pair of prongs received in one of the sets of female openings in the wall and which provides three outlets positioned at the front, top, and bottom of the adapter and all electrically connected with the one pair of prongs entering said female openings. While this type of adapter provides ample facilities for the connection of additional appliance cords to a single wall plate, nevertheless it has been found very unsatisfactory in use. The three-cord sets attached to a single cube tap, which cords are often rendered heavy by a rubber coating, exert a substantial downward and outward pull on the adapter which is greater than the resistance offered by the friction between the single pair of closely positioned prongs and the yielding contacts within the female wall fitting. Inasmuch as the single pair of closely positioned prongs affords the sole means of support for the three-way adapter and for the plugs and cords connected thereto, these adapter plugs of the cube tap type are continually being either pulled completely out of the sockets or are so weighted down by the cord assemblies as to assume a downwardly inclined and nearly pulled-out position. When in this position poor electrical contact is provided, and the slightest jerk on one of the cords will disengage the adapter and cause it to fall to the floor.

It is one of the objects of the present invention to provide a unitary adapter plug for use with wall plates having two spaced sets of socket openings, which adapter is specially constructed to simultaneously cooperate with both sets of openings to the end that it is rigidly supported against downward and outward strains. As a result, a plurality of plug and cord sets may be safely connected to the adapter without causing loosening or disengagement thereof. Furthermore, the connection between the adapter and the wall will withstand the usual pulling strains to which a plug is subjected.

A further more specific object of the invention is to provide an adapter including a unitary elongated body of a length to overlap both sets of openings in a standard double wall plate wherein there is a pair of prongs near one end of the body for cooperation with one set of wall plate openings and a pair of prongs near the other end of the body for simultaneous cooperation with the other set of wall plate openings to thereby afford a four-point support comprising two widely spaced groups.

A further object of the invention is to provide a construction as above described wherein the contact fingers within the adapter are so arranged and connected as to permit the provision of two outlets on each side of the adapter body and of two outlets on the front of the adapter body.

With the above and other objects in view, the invention consists of the improved adapter plug and all its parts and combinations as set forth in the claims, and all equivalents thereof. In the accompanying drawing, in which the same reference numerals designate the same parts in all of the views,

Fig. 1 is a front elevational view showing the improved adapter connected to a wall plate;

Fig. 2 is a side elevational view, part being shown in vertical section;

Fig. 3 is a sectional view through the plug alone taken on the line 3—3 of Fig. 2; and

Fig. 4 is a perspective view showing the improved adapter about to be inserted in the outlet opening of a wall plate.

Referring more particularly to the drawing, the numeral 5 designates a wall plate of a standard type now in use having longitudinally spaced openings 6 and 7 embracing outlet fittings 8 and 9. These outlet fittings are electrically connected with a source of electricity, and the fitting 8 includes a pair of openings 10 which extend longitudinally of the wall plate and which guide the prongs of a plug into electrical contact with the usual contact fingers within the outlet fitting. The outlet fitting 9 is provided with similar outlet openings 11.

The improved adapter plug may be formed of any electrical insulating material, such as one of the compositions of which "Bakelite" is an example, rubber, or any other suitable substance. It comprises an elongated body 12 of a length to overlap both of the outlet fittings 8 and 9 in a standard wall plate.

The upper half of the body is provided with plug receiving or outlet openings 13 in front, 14 on one side, and 15 on the opposite side, and the lower half of the body provides similarly arranged

outlet openings designated by the same numerals. Referring to Fig. 3, there is a yielding contact finger 16 adapted to be engaged by a prong entering the uppermost front opening 13, and said finger has a reversely bent angular portion 17, as illustrated in Fig. 2, so that good electrical contact is provided. A double-ended finger 18 crosses the inner end of the finger 16 and has one end inwardly bent in the same manner as the bend 17 of the finger 16 and cooperable with the uppermost side opening 15 of the body and its other end similarly bent and cooperable with the uppermost side opening 14 of the body. The two crossed finger forming members are connected to the inner end 19 of a prong 20, and said prong extends laterally and downwardly within the body as at 21, and it is then twisted to right angles as at 22 so that the portion of the prong 20 which projects externally of the plug will have its face in a vertical plane to cooperate with one of the outlet openings 10 in the wall plate.

Contact fingers 23 and 24, which are formed in the same manner as the contact fingers 16 and 18 respectively, are positioned to coact with the lower of the top sets of openings 13, 14, and 15, and said fingers are electrically connected with the inner end 25 of a prong 26. Internally of the body the prong 26 is bent laterally and upwardly, as at 27, and is then twisted so that the external portion of the prong 26 is parallel to and in horizontal alinement with the prong 20. It is therefore apparent that the prong 20 makes electrical connection with the upper prongs of appliance plugs 28, 29, and 30 when said plugs are inserted in the adapter fitting as shown in Fig. 4, and that the prong 26 makes electrical connection within the adapter with the other prongs of appliance plugs 28, 29 and 30.

Within the lower half of the body the arrangement is identical as that described in connection with the upper half, and the lower prongs 31 and 32 are electrically connected within the body to the prongs of lower appliance plugs 33, 34 and 35 when said prongs are inserted in the manner shown in Fig. 4 in the lower sets of openings 13, 14, and 15 of the adapter.

It is apparent from the above arrangement that in a single unitary body which is of a length to overlap both of the outlet fittings 8 and 9 of a standard wall plate, there is one set of prongs 20 and 26 near one end of the adapter body 12 and another pair of prongs 31 and 32 spaced a substantial distance from the prongs 20 and 26. This spacing coincides with the standard spacing between the outlet openings 10 in the standard wall plate 5 and the outlet openings 11 therein. Thus, a single unitary fitting coacts simultaneously with both sets of outlet openings in the wall plate as shown in Figs. 2 and 4 to furnish firm support.

Because of the wide spacing between the prongs 20, 26 and 31, 32 the weight of the appliance plugs 28, 29, 30, 33, 34, and 35 plus the weight of the cords 36, 37, 38, 39, 40, and 41 will not tend to loosen the adapter from its firm connection as shown in Fig. 2 and will not tend to pull the adapter to an outwardly and downwardly inclined position as commonly takes place when a three-way cube tap is used, which type of adapter fitting has its sole support furnished by one pair of prongs. In addition, the firm support provided by the improved construction of the present adapter fitting enables the adapter to withstand the usual minor jerks on the appliance cords.

While the invention has been shown for use in connection with double wire electrical systems, it is obviously applicable for use in connection with outlet plates as used in three-wire circuits, wherein there are three openings corresponding to the openings 10 and three openings corresponding to the openings 11. In such case there would be an additional prong grouped with the prongs 20, 26 and an additional prong grouped with the prongs 31, 32 and of course the outlet openings in the adapter would be in sets of three instead of in sets of two.

The broad concept of the invention is the use of a unitary body of a size to overlap a plurality of outlet fittings in a single wall plate assembly, with the adapter provided with a plurality of widely spaced sets of prongs to furnish firm support against forces which tend to cause disengagement of the adapter from the wall plate.

Various changes and modifications may be made without departing from the spirit of the invention and all of said changes are contemplated as may come within the scope of the claims.

What I claim is:

1. An adapter plug comprising a unitary body, a plurality of sets of external prongs extending into said body, said prongs having projecting ends constructed and arranged for quick insertion in the prong receiving openings of standard outlet fittings and the individual prongs in each set being electrically separated from each other, and a plurality of contact fingers within the body in electrical connection with each set of prongs, said adapter body having a plurality of sets of outlet openings for guiding the prongs of appliance plugs into electrical contact with said fingers, said sets of external prongs being widely spaced to furnish cooperative support against loosening or disengagement of either set of prongs of the adapter from electric outlet fittings with which said prongs are adapted to simultaneously engage.

2. An adapter plug comprising a unitary body, a plurality of sets of external prongs extending into said body, said prongs having projecting ends constructed and arranged for quick insertion in the prong receiving openings of standard outlet fittings and the individual prongs in each set being electrically separated from each other, and a plurality of contact fingers within the body in electrical connection with each set of prongs, said adapter body having a plurality of sets of outlet openings for guiding the prongs of appliance plugs into electrical contact with said fingers, said sets of external prongs being spaced apart a distance equal to the spacing between the outlet fittings of a standard plural outlet wall fixture to simultaneously engage the plurality of fittings therein, and said sets of prongs furnishing cooperative support against loosening or disengagement of either set.

3. An adapter plug comprising an elongated unitary body, a set of external prongs extending into said body adjacent one end of the latter, a set of external prongs extending into the body adjacent its opposite end, said prongs having projecting ends constructed and arranged for quick insertion in the prong receiving openings of standard outlet fittings and the individual prongs in each set being electrically separated from each other, and a plurality of contact fingers within the body in electrical connection with each set of prongs, said adapter body having a group of side and front outlet openings for each set of external prongs for guiding the prongs of appliance plugs into electrical connection with

the contact fingers for each set of prongs of the adapter, said sets of external prongs of the adapter being widely spaced to furnish cooperative support against loosening or disengagement of either set of prongs of the adapter from electric outlet fittings with which said prongs are adapted to simultaneously engage.

4. An adapter plug comprising an elongated unitary body, a set of external prongs extending into said body adjacent one end of the latter, a set of external prongs extending into the body adjacent its opposite end, said prongs having projecting ends constructed and arranged for quick insertion in the prong receiving openings of standard outlet fittings and the individual prongs in each set being electrically separated from each other, and a plurality of contact fingers within the body in electrical connection with each set of prongs, said adapter body having a group of side and front elongated outlet openings extending in a direction transversely of the body for each set of external prongs of the adapter, said openings in the adapter being adapted to guide the prongs of appliance plugs into electrical connection with the contact fingers for each set of prongs of the adapter, said sets of external prongs having faces in planes extending longitudinally of the body and the sets being widely spaced to furnish cooperative support against loosening or disengagement of either set of prongs of the adapter from electric outlet fittings with which said prongs are adapted to simultaneously engage.

5. In combination, an electric wall fixture having two spaced outlet fittings therein each provided with a plurality of prong receiving openings, a unitary adapter including a body of a size to overlap both of said outlet fittings, two sets of external prongs extending into said adapter body, one set of prongs being removably engaged in the prong receiving openings of one outlet fitting and the other set being removably engaged in the prong receiving openings of the other outlet fitting, and a plurality of contact fingers within the body in electrical connection with each set of prongs, said adapter body having a plurality of sets of outlet openings for guiding the prongs of appliance plugs into electrical contact with said fingers, said sets of external prongs being widely spaced to furnish cooperative support against loosening or disengagement of either set of prongs of the adapter from the prong receiving openings in said electric outlet fittings.

6. In combination, an electric wall fixture having two spaced outlet fittings therein each provided with a plurality of prong receiving openings, a unitary adapter including an elongated body of a length to overlap both of said outlet fittings, a set of external prongs extending into said body adjacent one end of the latter, a set of external prongs extending into the body adjacent its opposite end, one set of prongs being removably engaged in the prong receiving openings of one outlet fitting and the other set of prongs being removably engaged in the prong receiving openings of the other outlet fitting, and a plurality of contact fingers within the body in electrical connection with each set of prongs, said adapter body having a group of side and front outlet openings for each set of external prongs of the adapter for guiding the prongs of appliance plugs into electrical connection with the contact fingers, said sets of external prongs being widely spaced to furnish cooperative support against loosening or disengagement of either set of prongs of the adapter from the prong receiving openings of the electric outlet fittings.

CHARLES G. EISENBERG, JR.