Aug. 29, 1967 J. A. NICHOLSON 3,338,225

REMOTE CONTROL FOR AN INTERNAL COMBUSTION ENGINE

Filed April 22, 1965 3 Sheets-Sheet 1

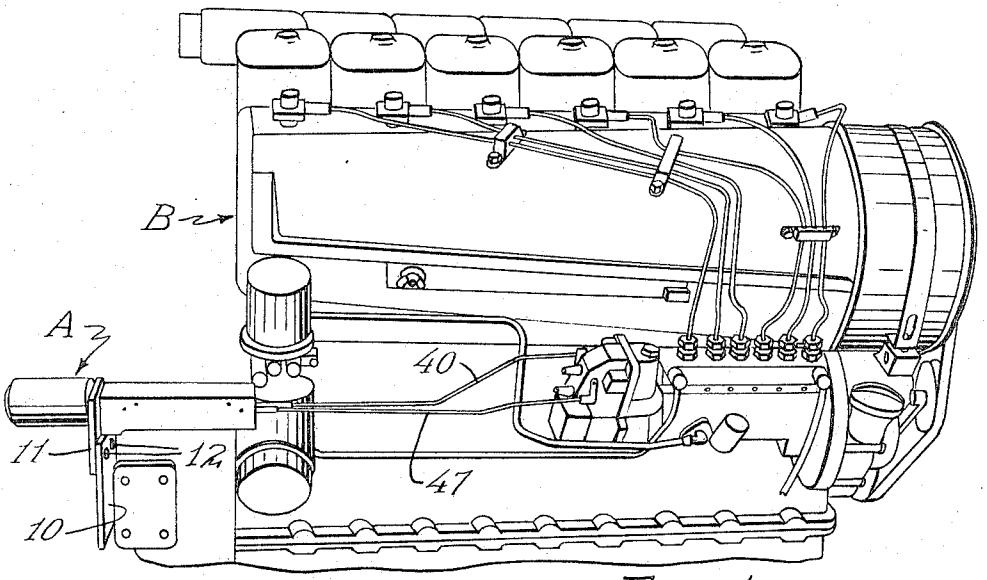

FIG. 1

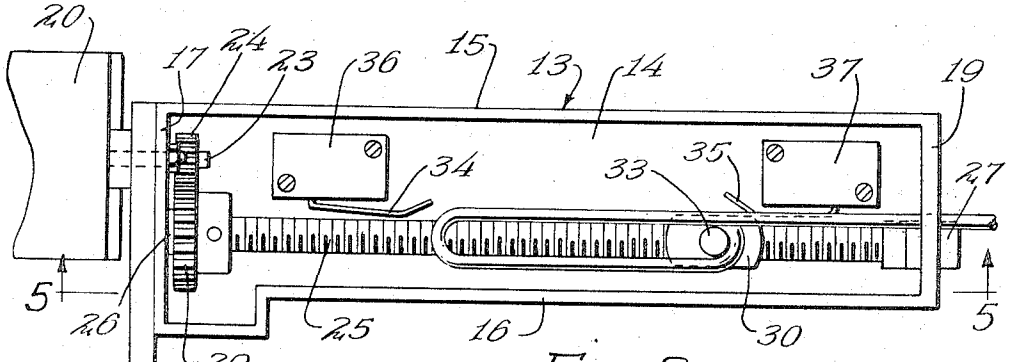

FIG. 2

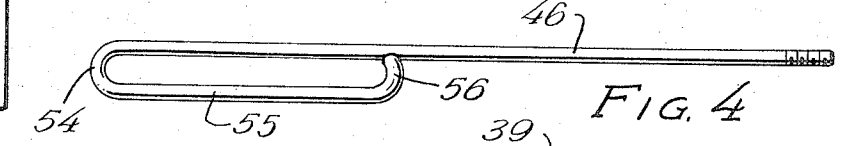

FIG. 4

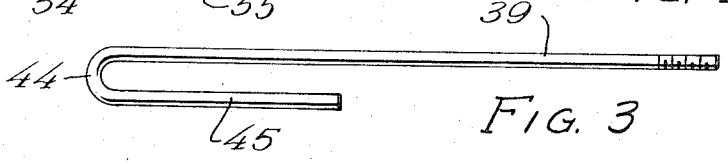

FIG. 3

INVENTOR

JOHN A. NICHOLSON

BY Robertson Dunning

ATTORNEY

Aug. 29, 1967 J. A. NICHOLSON 3,338,225

REMOTE CONTROL FOR AN INTERNAL COMBUSTION ENGINE

Filed April 22, 1965 3 Sheets-Sheet 2

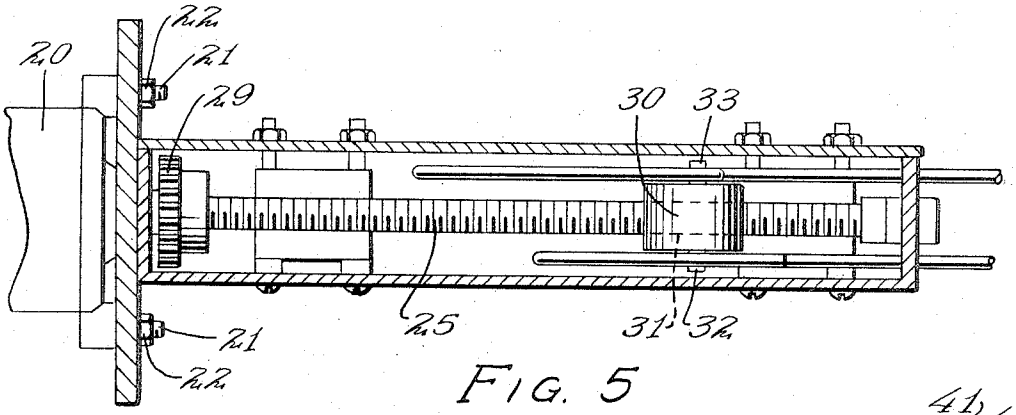

FIG. 5

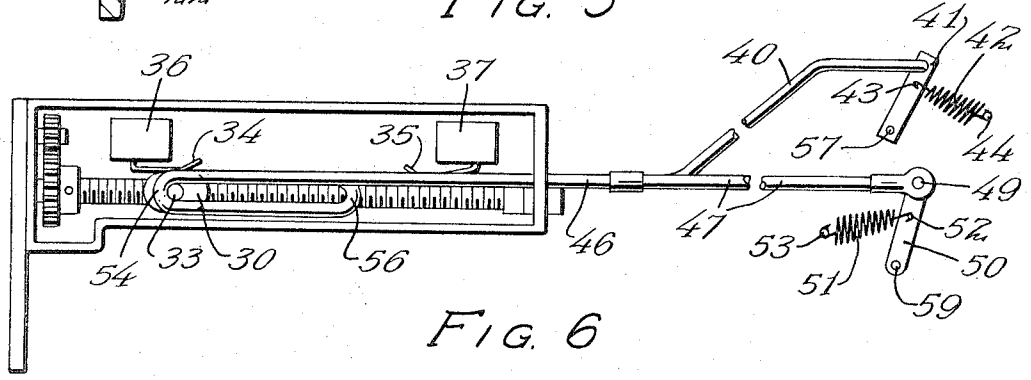

FIG. 6

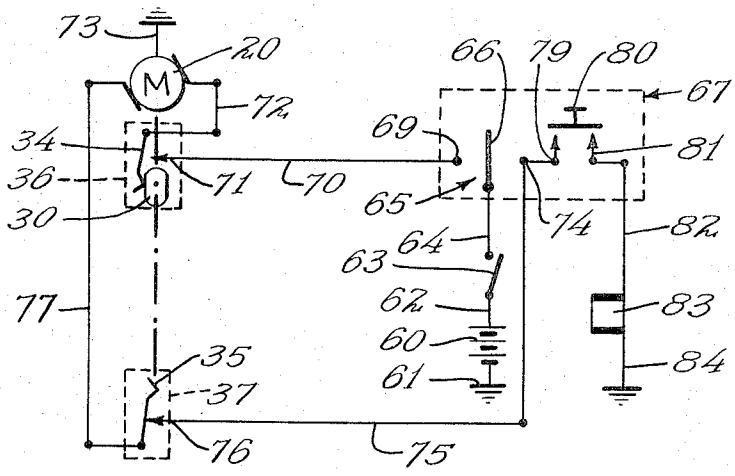

FIG. 7

INVENTOR

JOHN A. NICHOLSON

BY Robert M. Dunning

ATTORNEY

Aug. 29, 1967 J. A. NICHOLSON 3,338,225

REMOTE CONTROL FOR AN INTERNAL COMBUSTION ENGINE

Filed April 22, 1965 3 Sheets-Sheet 3

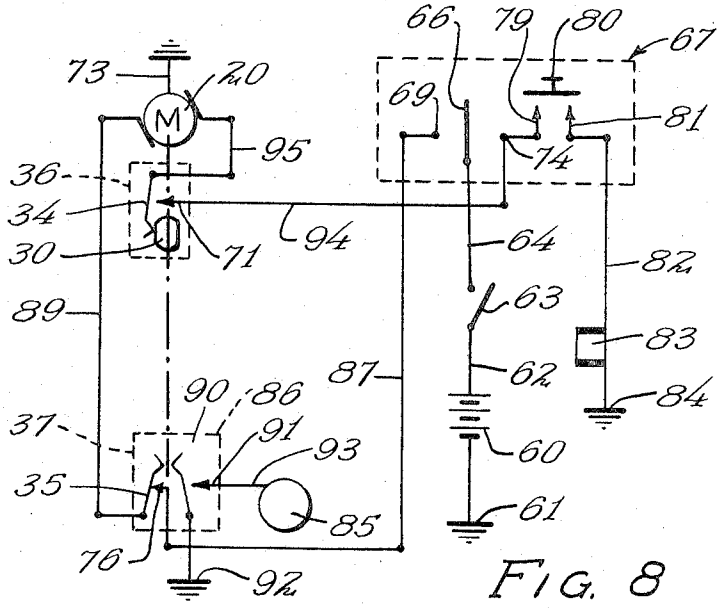

FIG. 8

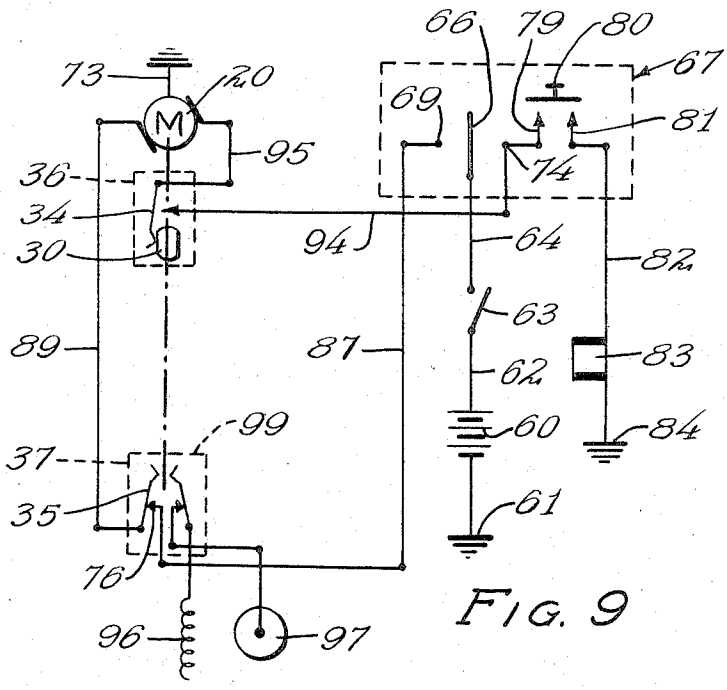

FIG. 9

INVENTOR

JOHN A. NICHOLSON

BY Robert M. Dunning

ATTORNEY

United States Patent Office 3,338,225 Patented Aug. 29, 1967

3,338,225

REMOTE CONTROL FOR AN INTERNAL COMBUSTION ENGINE

John A. Nicholson, 36 Norbert Place, St. Paul, Minn. 55116

Filed Apr. 22, 1965, Ser. No. 450,095
7 Claims. (Cl. 123—179)

This invention relates to an improvement in remote control for an internal combustion engine and deals particularly with a means of starting, stopping or controlling the speed of an internal combustion engine or a diesel engine.

There are many instances when the use of a remotely controlled device for starting, stopping and testing the speed of internal combustion engines is very valuable. For example, earth compacting rollers and the like, are oftentimes towed in pairs behind a crawler tractor. The earth compacting devices include engines which cause a vibratory movement of the rollers in compacting the earth. It is difficult to control the operation of these engines by connecting links or levers and thus it is usually extremely difficult for a single operator to operate both the tractor and the towed devices. As another example, it is sometimes desirable to control a series of pumping engines from a single station. By attaching my remote control device to each of the engines the individual pump engines may be started, stopped and speed controlled.

A feature of the present invention resides in the fact that the apparatus is very simple in construction, and usually can be produced for a fraction of the cost normally involved in providing the various connecting links or lines which have been previously used to accomplish the purpose. The device comprises a housing of elongated form in which a threaded shaft is supported extending longitudinally of the housing. A reversible motor is attached to the housing, and acts to selectively rotate the shaft in either direction. A cross-head is threadedly supported upon the threaded shaft, and moves longitudinally of the shaft upon rotation of the motor. In normal operation, a pair of links connects the cross-head to the controls of the motor, one link extending to the throttle for controlling the engine speed, and the other link being connected to a lever controlling the stop lever of the engine.

A feature of the present invention resides in the provision of a lost motion linkage connecting the cross-head and the links. As a result, the link which is connected to the stop lever of the engine functions only as the cross-head reaches one extreme position of its stroke. The throttle control lever is operated during movement of the cross-head towards its other extreme position, and increases or decreases the speed of the engine upon movements of the cross-head toward or away from this other extreme position. When the cross-head is moved away from this other extreme position, the throttle lever is moved to idling position, and remains in this position until the speed is increased by a reversal in the direcion of movement of the cross-head, or until the stop lever is actuated to stop the engine.

A further feature of the present invention resides in the provision of limit switches which are actuated in the extreme positions of the cross-head to open the circuit to the motor and to prevent a further movement of the cross-head in one direction or the other.

A further feature of the present invention resides in the provision of a lost motion linkage system which comprises a pair of loops of elongated form which engage projecting studs on opposite sides of the cross-head. These elongated loops permit longitudinal movement of

the cross-head throughout the length of the loop without causing movement of the linkage. Upon movement of the cross-head toward one extreme position, an end of the loop on the link connected to the stop lever of the engine is engaged to stop the engine. Upon movement of the cross-head toward the other extreme position, the opposite end of the link connected with the throttle is engaged to move the throttle lever from idling position to a maximum speed which is at the other extreme position of the cross-head.

A feature of the present invention resides in the fact that the control may be adapted for use either on diesel engines or on gasoline engines provided either with a magneto or coil connected to a suitable source of supply of current. In the event the control unit is used in conjunction with an engine having a lever which is pivoted into a position to stop the engine, the two linkages which have been described are employed. However, if the engine power supply is provided by a magneto, an additional switch is provided which is normally open, but which is closed as the cross-head moves into one extreme position to ground the magneto and to thus stop the flow of current to the spark plugs. If the current is supplied through a coil, an additional leverage which is provided which is normally closed and is connected between the coil and the distributor to open the circuit as the cross-head nears one extreme position.

These and other objects and novel features of the present invention will be more fully set forth in the following specification and claims:

In the drawings forming a part of the specifications;

FIGURE 1 is a diamagnetic view of an engine showing the control attached thereto for operating the throttle and the stop lever of the engine.

FIGURE 2 is an elevational view of the control housing with the side panel removed, showing the cross-head in one extreme position.

FIGURE 3 is an elevational view of one of the control links.

FIGURE 4 is an elevational view of the other of the control links.

FIGURE 5 is a sectional view through the control housing, the position of the section being indicated by the line 5—5 of FIGURE 2.

FIGURE 6 is a view similar to FIGURE 2 on a somewhat smaller scale, showing the cross-head in its other extreme position.

FIGURE 7 is a diamagnetic view of the wiring of the control when used in conjunction with a diesel engine.

FIGURE 8 is a partial wiring diagram showing the manner in which the control is connected to an engine having a magneto.

FIGURE 9 is a view similar to FIGURE 8 showing the arrangement when the engine current is supplied from a coil to a distributor.

The control unit A is designed for use with an engine B which may be a diesel engine or a gasoline engine of a conventional form. The control A is supported by a bracket plate **10** attached to a portion of the body of the engine and connected to an attaching flange **11** by fastening means such as the bolts **12**. In view of the fact that the engines vary in size and proportion, the bracket plate **10** must be properly formed to suit each particular form of engine B.

As indicated in FIGURE 2 of the drawings, the control unit A is provided with a housing **13** including a back plate **14**, from which project peripheral flanges which terminate in a common plane parallel to the back plate **14**. These flanges include a top wall **15**, a bottom wall **16**, and opposite end walls **17** and **19**. The end wall **17** is

anchored in face contact with the anchoring flange **11**, supporting the housing **13** extending in right angular relation to the anchoring flange **11**.

A motor **20** is secured to the mounting flange or anchoring flange **11** by means of bolts or studs **21** extending through the anchoring flange and secured in position by means of nuts **22**. This structure is best illustrated in FIGURE 5. Referring again to FIGURE 2, the motor **20** is provided with a motor shaft **23** which extends through the anchoring flange **11** and the end housing wall **17** and is provided with a pinion **24**. A threaded shaft **25** is rotatably supported to extend longitudinally of a housing **13** and is supported by bearings **26** and **27** on the housing end wall **17** and **19** respectively. The threaded shaft **25** is provided with a gear **29** which is in mesh with the pinion **24** so as to rotate the shaft **25** upon rotation of the reversible motor **20**.

A cross-head **30** is provided with an internally threaded aperture **31** therethrough (FIGURE 5) and is threaded onto the shaft **25**. A pair of pins **32** and **33** extend laterally from the cross-head **30**, these pins or studs being axially aligned. The cross-head **30** is engageable with the operating arms **34** and **35** of a pair of limit switches **36** and **37** respectvely. As the cross-head moves to the extreme position illustrated in FIGURE 2 of the drawings, the switch **37** is actuated to prevent further movement of the cross-head by opening the circuit to the motor **20** as will be later described. As the cross-head **30** reaches its other extreme position as indicated in FIGURE 6 of the drawings, it engages the arm **34** of the limit switch **36**, thus opening the circuit to the motor **20** to prevent further movement of the cross-head toward the left as viewed in this figure.

A pair of links are actuated by the cross-head **30**, these links being illustrated in FIGURES 3 and 4. The link **39** illustrated in FIGURE 3 is connected by link extension **40** to a stop lever **41** normally biased to one extreme position by a spring **42** connected to the lever **41** at **43**, and connected to a fixed point on the engine at **44**. Obviously, the type of spring employed varies in different engines. The link **39** is bent at **44** to provide a rearwardly bent arm **45** parallel to the body of the link **39**. The link **39**, bent portion **44**, and parallel arm **45** form in effect a loop which accommodates the pin or stud **32** on the cross-head **30**.

The link **46** is designed for connection with a link extension **47** pivotally connected at **49** to a throttle lever **50** which is urged in one pivotal direction by a spring **51** diagrammatically illustrated as being connected to the lever **50** at **52**, and to the engine at **53**. The link **46** is indicated in detail in FIGURE 4 of the drawings and includes a rounded end **54** which connects the main body of the link **46** to a parallel arm **55** having an upwardly curved end **56** to form a closed loop. The curved end is connected to or is closely adjacent to the body **46** of the link. The link body **46** and arm **55** are spaced properly to accommodate the pin or stud **33** on the cross-head **30**.

As will be understood, the link extensions **40** and **47** must be shaped to fit the shape of the particular engine and to connect the control unit A with the stop-lever **41** and the throttle lever **50**. In usual practice, the stop-lever **41** cuts off the entire flow of fuel from the fuel tank to the engine B. Thus, when the stop-lever **41** is swung in a counterclockwise direction about the operating shaft **57**, the stop-lever functions to stop the engine B. The throttle lever **50** is urged toward an idling position by the spring **51** and in one extreme position the control shaft **59** of the throttle lever **50** is in this idling position. A pivotal movement of the throttle lever **50** in a clockwise direction acts to increase the speed of the engine, and at one extreme position of the cross-head **30** the throttle lever **50** has rotated the control shaft **59** into full speed position.

In the position of the apparatus illustrated in FIGURE 6 of the drawings, the stop lever **41** has been pivoted into engine stopping position, and the limit stretch **36** has functioned to stop further rotation of the motor **20**. The control remains in this position until it is desired to again start the engine.

As will be pointed out in conjunction with the wiring diagrams, the engine cannot be started unless the remote control operating lever is in an "on" position, and the double throw switch which controls the circuit to the motor **20** is put in position to rotate the motor in a direction to move the crosshead **30** to the right toward the position illustrated in FIGURE 2 of the drawings. Once the crosshead **30** has been disengaged from the switch arm **34** of the remote control switch **36**, continued movement of the crosshead **30** has no effect upon the speed of the engine until the pin **33** of the crosshead engages the closed end **56** of the loop in the link **46**. Further movement of the crosshead **30** to the right will increase the speed of the engine by pivoting the throttle lever **50**, and the speed increases until the crosshead **30** engages the lever **35** of the limit switch **37**. Further movement of the crosshead to the right will act to break the circuit to the motor through the limit switch **37**.

FIGURE 7 of the drawings shows the wiring diagram of the apparatus when it is used to control a diesel engine. As has been described, when the crosshead **30** moves in one direction, it engages the switch arm **34** to break the motor circuit at the same time the stop lever **41** is pivoted into position to stop the engine. The circuit includes the battery **60** one terminal of which is grounded as indicated in **61**. The other battery terminal is connected by conductor **62** to the engine ignition switch **63**. This switch **63** is connected by a conductor **64** to a double throw switch **65** which forms a part of the remote control unit which is indicated in general by the numeral **67**.

The switch blade **66** is engaged with a terminal **69** connected by a conductor **70** to a switch terminal **71** which is shown as being engageable with the normally closed switch arm **34** which is a part of the limit switch **36**. In FIGURE 7, the crosshead **30** has already engaged a switch arm **34** to open the contacts **34**, **71**, of the switch **36**. The switch arm **34** is connected by a conductor **72** to one terminal of the reversible motor **20**, the motor **20** having a grounded terminal **73**. Accordingly, when the ignition switch **63** is closed, the control switch **66** is in engagement with the terminal **69**, and the limit switch contacts **34**, **71**, are closed, the motor **20** will rotate in a direction to move the crosshead in a direction toward the motor as indicated in the figure.

When the control switch **66** of the remote control unit **67** is moved into engagement with its second terminal **74**, a current from the battery **60** may pass through the ignition switch **63** and control switch **66** to the conductor **75** leading to a terminal **76** of the limit switch **37** which is engageable with the switch arm **35**. The circuit continues through the conductor **77** to a third terminal of the motor **20**, completing a circuit to the ground **73** and causing rotation of the motor **20** in a direction to move the crosshead away from the motor **20** as viewed. A movement of the crosshead in this direction tends to increase the speed of operation of the engine until the crosshead opens the limit switch **37**.

When the control switch **63** is in engagement with the terminal **74**, a circuit is also closed to one terminal **79** of a starter switch **80**, the other terminal **81** being connected by conductor **82** to the starting solenoid **83**, the second terminal which is grounded at **84**. By pressing down on the starter switch **80**, and swinging the control switch lever **66** into engagement with the contact **74**, the crosshead **30** moves in a direction to release the stop lever **41** of the engine from its engine stopping position, and to close a circuit to the starting solenoid **83** which controls the engine starter. The details of this portion of the engine circuit are not disclosed as it is common practice.

From the foregoing description it will be obvious that the remote control unit **67** which contains the control switch **66** and the starting switch **80** is connected by four

conductors to the engine itself, and as a result the remote control unit may be placed at any distance from the engine within reason. The engine may be started, stopped, or run at any speed between a maximum speed and idling speed. Thus the operator has complete control of the operation of the engine while at a distance therefrom.

The circuit used in FIGURE 8 of the drawings is employed for controlling engines in which the ignition circuit includes a magneto indicated at **85**. This type of engine is normally stopped by grounding the magneto circuit. In view of the fact that engines of this type are very well known in the art, the magneto circuit is not illustrated. The remote control unit **67**, the battery supply circuit, and the starting solenoid current shown in FIGURE 8 are identical to the similar structure shown in FIGURE 7, and accordingly the parts have been given similar numbers. The motor **20** which is grounded at **73** and which drives the crosshead **30** between two extreme positions to actuate limit switches **36** and **37** is also similar to the arrangement illustrated in FIGURE 7. The main point of difference between these two circuits lies in the fact that the normally open switch **86** is provided adjoining the limit switch **37** and operated simultaneously. The purpose of this second switch **84** is to provide a means of grounding the magneto **85**. In this arrangement, the stop lever **41**, the link **39** and the link extension **40** are eliminated.

When the control switch is in engagement with the contact **69**, a circuit is closed from the battery **60** and ignition switch **63** to a conductor **87** leading to the normally closed terminal **76** of the limit switch **37**. The circuit is completed through the conductor **89** to a terminal of the motor **20**, the second terminal of which is grounded at **73**. This circuit acts to move the crosshead **30** in a direction away from the motor **20**. When the crosshead **30** reaches its opposite extreme position, it engages the limit switch arm **35** and opens the circuit to the motor **20** thus stopping the motor. At the same time, the crosshead **30** engages the arm **90** of the switch **86** and causes the arm **90** to engage the terminal **91** of the switch **86**. The arm **90** is connected to ground as indicated at **92**, while the terminal **91** is connected to the magneto circuit through the conductor **93** thus grounding the circuit and stopping the engine. When the control lever **66** is in engagement with the terminal **74**, a conductor **94** is connected to the terminal **71** which is normally engaged with the arm **34** of the limit switch **36**. This completes the circuit through a conductor **95** to the motor **20** to rotate the motor **20** in a direction to move the crosshead **30** toward the motor as viewed in the drawings.

The circuit shown in FIGURE 9 is used when the control unit is to control an internal combustion engine in which the current to the spark plugs is supplied through a coil **96** which provides current for the distributor **97**. The structure is virtually identical to that illustrated in FIGURE 8 with the exception of the fact that the switch **99** mounted in the control unit for actuation simultaneously with the limit switch **37** is normally closed, and the current from the coil to the distributor passes through this switch. As a result, when the crosshead **30** actuates the limit switch **37**, it also actuates the switch **99** in order to break the ignition circuit between the coil and the distributor.

From the foregoing description, it will be clear that any common type of internal combustion engine or diesel engine, may be readily controlled from a remote point by providing the remote control unit **67** which is connected to the fixed control unit on the body by a four-wire cable. As the remote control unit which includes the control switch **66** and starter switch **80** may be only large enough to contain these two switches, a considerable number of engines may be controlled individually from a single location. The remote control units may, for example, be mounted on a tractor for controlling the engines of a series of earth compacting rollers. With such an arrangement, the earth compacting rollers may be turned off by the tractor operator without leaving the seat of the tractor and without the use of the connecting links and levers which manually control the usual engine controls.

In accordance with the patent statutes, I have described the principles of construction to an improvement in automatic controls with a means of starting, stopping or controlling the speed of an internal combustion engine or a diesel engine, and while I have endeavored to set forth the best embodiment thereof, I desire to have it understood that changes may be made within the scope of the following claims without departing from the spirit of my invention.

I claim:

1. A remote control device for use in conjunction with an engine having a pivoted throttle normally biased toward idling position, a starter solenoid adapted to start the engine, a unit attached to the engine including a reciprocating member, a reversible motor for reciprocating said member, a link connected to said reciprocating member and adapted to pivot the throttle lever upon reciprocation of said reciprocating member, said motor including two motor circuits having a common terminal; one circuit operable, when energized, to drive the motor in one direction and the other circuit operable, when energized, to drive the motor in the opposite direction, and an electric power source for said starter solenoid, wherein the improvement comprises:

a remote control unit,

a circuit including said power source having one terminal connected to said common motor circuit terminal,

said reomte control unit including a manually operable double throw switch including a switch arm movable between two switch terminals, and a normally open starter switch,

a first connector extending from the other terminal of said power source to said arm of said double throw switch,

a second connector extending from one said motor circuit to one said switch terminal,

a third connector extending from the other said motor circuit to the other said switch terminal,

a fourth connector extending from said first connector through said normally open starter switch, said starter solenoid, and to said one terminal of said power source.

2. The structure of claim **1** and in which fourth connector is connected to said first connector through one of said double throw switch terminals to be activated only when said switch arm is in engagement with this terminal.

3. The structure of claim **1** and including a pair of normally closed limit switches in the path of movement of said reciprocating member, and in which one said limit switch is in said second connector and the other is in said third connector.

4. The structure of claim **3** and in which said engine includes an electrically controlled stopping means, and in which the device includes a third limit switch engageable simultaneously with one limit switch of said pair to stop the engine.

5. An engine control device for controlling the speed of an engine having a throttle lever pivotal between an idling speed position and a full speed position and normally biased toward idling position, a housing adapted to be fixedly supported by said engine, a threaded shaft rotatably supported by said housing, a reversible motor connected to said shaft for selectively rotating the shaft in either direction, a member threaded on said shaft and movable longitudinally thereof upon rotation thereof, a link adapted for connection to said throttle, and a stop lever pivotal between stop and run positions and normally biased toward run position, the improvement comprising:

said link having an elongated slot therein parallel to the direction of movement of said threaded member,

means on said threaded member engaged in said slot and operable upon engagement with an end of said slot to pivot said throttle toward full speed position,

said slot being longer than the length of movement of said threaded member necessary to move said throttle between said positions, whereby

movement of said threaded member in the opposite direction is adapted to permit pivotal movement of said throttle toward idling position, and

further movement of said means on said threaded member is permitted by the length of said slot,

a second link pivotally connected to said stop lever and having an end parallel to, and adjacent to, said shaft, and

cooperable means on said second link and on said threaded member to pivot said stop lever to stop position when said threaded member has moved past the position at which said motor speed has been reduced to idling speed.

6. An improvement in engine control device for controlling the speed and operation of an internal combustion engine having a throttle control lever pivotal between idling speed position and full speed position, and normally biased toward idling speed position, and a stop lever pivotal between engine stop and engine run positions and normally biased toward engine run position, the improvement comprising:

an elongated support adapted to be fixedly secured to the engine,

a reciprocating means supported by said support to extend longitudinally between two extreme positions,

means connected to said reciprocating means to selectively reciprocate said reciprocating means in either direction,

a first link adapted to be pivotally connected to said throttle lever and having an end extending in side by side relation with said reciprocating means and engaged thereby upon reciprocation of said reciprocating means toward one extreme position, this link being adapted to pivot said throttle lever toward full speed position,

a second link pivotally connected to said stop lever having an end extending in side by side relation to said reciprocating means and engaged by said reciprocating means upon movement thereof in the opposite direction after said throttle lever has been pivoted to idling speed position and said first link is disengaged from said engaged means thereon.

7. The structure of claim 6 and including means engaged by said reciprocating means upon movement thereof into either extreme position to stop movement of said means reciprocating said reciprocating means.

References Cited

UNITED STATES PATENTS

2,680,818	6/1954	Ringwald	290—40
2,873,382	2/1959	Herring	123—179 X

LAURENCE M. GOODRIDGE, *Primary Examiner.*