Dec. 12, 1961 R. R. MILLER 3,012,263

DENTAL CLEANING ATTACHMENT

Filed Nov. 19, 1959

Fig. 1

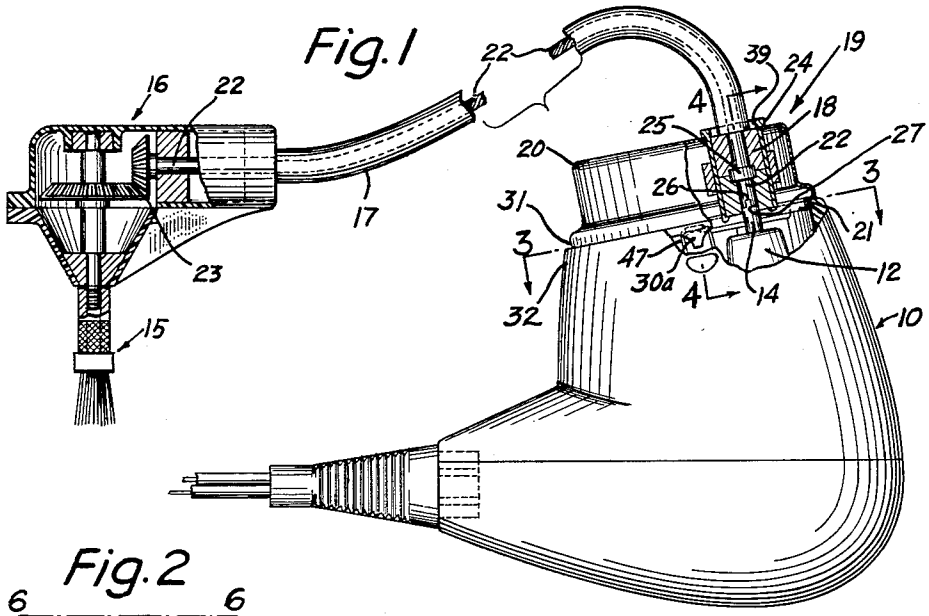

Fig. 2

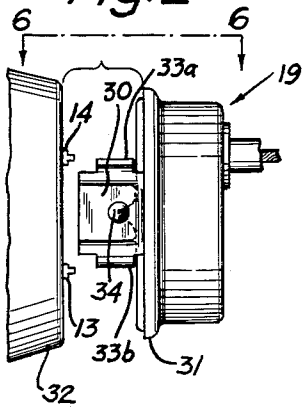

Fig. 3

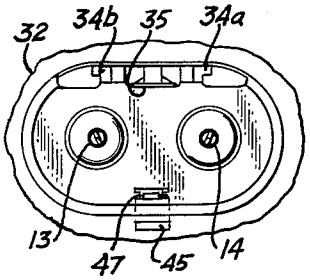

Fig. 4

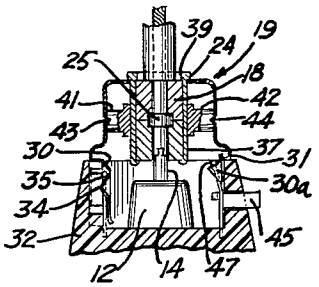

Fig. 5

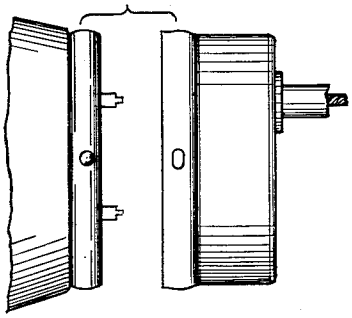

Fig. 6

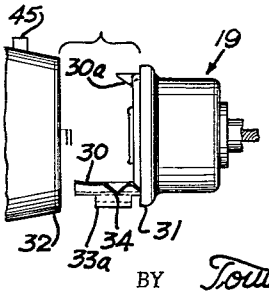

Fig. 7

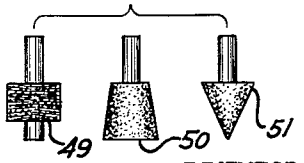

INVENTOR

RALPH R. MILLER

BY Toulmin & Toulmin

ATTORNEYS

United States Patent Office 3,012,263
Patented Dec. 12, 1961

3,012,263

DENTAL CLEANING ATTACHMENT

Ralph R. Miller, 6730 Lakeside Drive, Charlotte 5, N.C.

Filed Nov. 19, 1959, Ser. No. 854,143
2 Claims. (Cl. 15—28)

This invention relates to a dental cleaning attachment for motor-driven electrical appliances, and more particularly to an accessory for electrically operated razors and the like motor-driven devices, the attachment being especially useful for cleaning and brushing the teeth and dentures and massaging the gums.

It has been proposed heretofore to provide motor driven tooth brushes wherein the tufts of the brush are carried by motor driven means. Such brushes, while efficient, are expensive to manufacture and to maintain in operation. The present invention overcomes these disadvantages and provides a cleaning attachment device of simple construction and operation, and which is adapted to be attached to and driven by the motor of an electric shaver or the like appliance.

It is an object of the invention to provide a motor-driven tooth cleaning means in the form of an attachment which is adapted to be drivingly connected through a flexible shaft or cable to a rotary type electric razor.

Another object of the invention is to provide a brushing or cleaning attachment which is useful as a toilet accessory for cleaning and brushing the teeth, the attachment being connected by a flexible shaft or cable to a motor-driven shaft of an electric razor. The attachment is designed and constructed whereby it can be easily connected and disconnected from an electric razor or the like motor-driven appliance.

Still another object is to provide a power driven teeth cleaning device which can be carried and used as an auxiliary attachment to an electric razor. Different types and shapes of cleaning tips, such as may be made of rubber, plastic, fiber or brush bristles are provided, the tips being adapted to be removably fixed to the head portion which is rotated. Such rotatable cleaning tips are suitably shaped and designed to assist in rapidly cleaning the teeth, the cleaning tips being driven to provide a rotary rubbing and scrubbing action.

Other and additional objects and advantages of the present invention will appear more fully from the following description when considered in conjunction with the accompanying drawings which illustrate how the invention may be used.

FIGURE 1 depicts a motor-driven electric rotary-type of razor with the motor-driven tooth-brush attachment of this invention operatively connected thereto, the views being shown partly in perspective and partly in section to better illustrate the construction and operation of the electric toothbrush;

FIGURE 2 is a view in elevation and showing the adapter for attaching the rotary brush to the head of the electric razor and a driven shaft thereof, the razor being shown partly broken away;

FIGURE 3 is a view taken substantially along lines 3—3 and looking in the direction of the arrows, the view showing an electric razor with the rotary head removed for reception of the adapter and flexible drive connection for actuating the toothbrush, the body of the electric razor being broken away;

FIGURE 4 is a view in section and taken substantially on the line 4—4 and looking in the direction of the arrows, the fragmentary parts being shown in section to illustrate the structure of the adapter and means for attaching it to the motor driven shaft of the razor;

FIGURE 5 is a view similar to FIGURE 2, and illustrating a modified adapter for removably attaching the motor driven brush to the razor;

FIGURE 6 is a view similar to FIGURE 2 and taken substantially along the line 6—6, the same being drawn on a reduced scale and illustrating the structure of the adapter looking in the direction of the arrow; and

FIGURE 7 illustrates diagrammatically different types and shapes of the rotary brush heads which may be substituted for the brush shown in FIGURE 1.

In the drawings, referring more particularly to FIGURES 1 through 4 and FIGURE 6, an electric razor of the rotary type and designated **10** is illustrated. The razor is equipped with a motor **12** and two laterally spaced driven shafts **13** and **14** which are adapted to drive a pair of disc-shaped cutters mounted in a removable cutter head, not shown, such as employed during use of the razor for shaving purposes.

For driving the rotary teeth cleaning attachment illustrated in FIGURE 1, the razor cutter head is removed and a rotary brush attachment, generally designated **15**, is operatively connected to the motor **12** through a gear assembly **16** and interconnected flexible cable means **17**. This cable **17** is connected to a bushing **18** mounted in an adapter **19**, the latter comprising an elliptically-shaped casing **20** which is designed to fit snugly on the razor head portion **21** and to replace the razor cutter head. Cable **17** comprises a centrally disposed flexible driven shaft **22** which, upon rotation by the motor **12**, drives the brush **15** through the bevel gear assembly **23**, as illustrated in FIGURE 1.

The bushing **18** on the inner end of the flexible driven shaft **22** is retained in a socket **24** of the adapter **19**. An enlarged ring **25** on the shaft **22** retains the shaft in the bushing assembly whereby the shaft **22** can be drivingly connected to one of the motor-driven shafts, such as at **14**. The inner end of the shaft **22** is provided with an integral gear-tooth receiving portion **26** which is shaped to receive the gear tooth terminal portion **27** of the drive shaft **14** whereby rotation of the shaft **14** by the motor **12** rotates the flexible shaft **22** which drives the rotary brush **15**.

The adapter **19** comprises a clip **30** which is arranged on one side and directly opposite thereto there is provided a catch or button latch **30***a*, both of which are integral with the casing portion **31**. This construction provides suitable way for removably clamping the adapter to the head portion **32** of the razor. The clip **30**, as illustrated in FIGURE 2, comprises ears **33***a* and **33***b* which engage with grooves **34***a* and **34***b* on the head portion **32** of the razor, and a knob **34** is adapted to engage with a spring member **35** for spring clasping the parts together.

In the embodiment shown, the head of the rotary electric razor is oval shaped, as illustrated in FIGURE 3, and accordingly the adapter head **19** is similarly shaped so as to fit snugly to the head of the razor and be retained thereon during use of the rotary toothbrush **15**.

The adapter and flexible cable and bushing, which form a socket structure **24**, as shown best in FIGURE 4, is clamped in the cylindrically shaped casing **37**. This socket **24** is suitably riveted to the adapter **19**, as shown at **39**. For fixedly supporting and retaining the socket and bushing in position to drivingly connect the end of the cable shaft **22** to the end of the shaft **14** of the razor, arms **41** and **42** are provided which extend outwardly from the socket and terminate at their outer ends against the side walls of the adapter being clamped thereto as at **43** and **44**, as shown in FIGURE 4. A push button **45** on the razor head portion **32** co-acts with a spring member **47** which engages over the catch or button latch **30***a* on the casing portion **31**. The spring **47** and associated parts together with the clip **30**, as described, retain the adapter and socket structure **24** on the electric razor, as described, during use of the teeth cleaning attachment.

When it is desired to disconnect the rotary toothbrush

attachment, the button **45** is pushed inward, as shown in FIGURE 4, thereby releasing the spring **47** from the catch or button latch **30***a*. This permits the tooth cleaning attachment to be disconnected from the head of the razor and removed, thereby automatically disconnecting the motor-driven shaft **14** from the flexible drive cable shaft **22** of the rotary toothbrush.

In FIGURE 7 different types and shapes of rotary tooth cleaning and brushing means are shown. A circular brush is illustrated at **49** and a fruste-conical shaped cleaner member at **50**. Similarly at **51** there is depicted a triangular shaped rotary cleaning member and such as may be made of rubber or plastic material. Such differently shaped cleaning tips may be substituted for the brush member **15**, as shown in FIGURE 1, as desired. Furthermore, in place of bristles, the cleaning heads or tips as aforementioned may be formed of sponge rubber, fiber, fine emery cloth or the like, as desired.

In the operation of the rotary brush attachment, an electric razor or rotary appliance having a motor-driven shaft is adapted to be disconnected from its cutter or shearing means, as by removing the cutter head, and the adapter **19** of the attachment fixed thereon, as illustrated in the drawings. The adapter is shaped to fit the razor head and is clamped thereon in like manner as the cutter head which has been removed. A flexible cable shaft is used to drive the rotary brush or cleaner tip means, and which brush tip is removable for the substitution of a differently shaped cleaning tip as described. To facilitate the use of the cleaning attachment, as used for brushing and massaging the teeth and gums, or for brushing false teeth and the like dentures, the flexible cable **17** is made of any desired length.

To control the speed of the rotary driven brush or cleaner tip, suitable gear mechanism, such as shown in FIGURE 1, is preferably used so that the brush or cleaner means will be driven at the proper rotational speed to operate more efficaciously. Use of a reduction gearing assembly, such as illustrated in FIGURE 1, makes it possible to reduce the speed of rotation of the shaft driving the rotary brush for proper operation of the toothbrush.

The tooth cleaning attachment of this invention obviously will be modified as to its structure and driving connection as required to accommodate and to fit different types of electric shavers and motor-driven appliances of the character described. For example, in the use of the attachment with a vibratory driven shaft type electric razor, the same may be connected through suitable means to translate the translatory motion of the drive shaft into rotary movement. In the electric razor attachment shown, the motion of the razor is adapted to drive two shafts simultaneously. Either one of the drive shafts are thus available for connection to drive the rotary brush attachment in accordance with this invention.

Further, the rotary brush or cleaner attachment may, if desired, comprise a rigid drive shaft in place of the flexible elongated driving means illustrated. Further, in using the rotary brush for cleaning the teeth, as illustrated by the drawings, the electric razor may rest on a stationary support or may be held in the hand.

It will be understood that this invention is susceptible to modification in order to adapt it to different usages and conditions and, accordingly, it is desired to comprehend such modifications within this invention as may fall within the scope of the appended claims.

What is claimed is:

1. A dental attachment accessory for electric razors having a motor and a rotary drive shaft with gear tooth means thereon and driven by said motor, said attachment comprising a rotary brush actuated by said motor for cleaning the teeth and massaging the gums, an elongated flexible driven shaft connected to said rotary brush, and a fastening means carried at the end of said driven shaft for detachably fastening said attachment to said appliance, said fastening means comprising an adapter for insertion into said electric razor, said adapter having spring means for clamping engagement with said electric razor, a socket positioned in said adapter, a plurality of arms spacing said socket from the inner walls of the adapter, the end portion of said driven shaft extending into said socket and said end portion carrying an enlarged ring, and a bushing surrounding the end portion of said driven shaft in said socket whereby said enlarged ring retains said end portion of the driven shaft in said socket, said end portion of the driven shaft having gear tooth means thereon for drivingly connecting the correspondingly toothed end of said motor drive shaft therewith.

2. A dental attachment accessory for electric razors having a motor, a rotary drive shaft with gear tooth means thereon and driven by said motor, and a clip receiving means, said attachment comprising a rotary brush actuated by said motor for cleaning the teeth and massaging the gums, an elongated flexible driven shaft connected to said rotary brush, and a fastening means carried at the end of said driven shaft for detachably fastening said attachment to said appliance, said fastening means comprising an adapter for insertion into said electric razor, said adapter having a spring clip for clamping engagement with said clip receiving means in said electric razor, a socket positioned in said adapter, a plurality of arms spacing said socket from the inner walls of the adapter, the end portion of said driven shaft extending into said socket and said end portion carrying an enlarged ring, and a bushing surrounding the end portion of said driven shaft in said socket whereby said enlarged ring retains said end portion of the driven shaft in said socket, said end portion of the driven shaft having gear tooth means thereon for drivingly connecting the correspondingly toothed end of said motor drive shaft therewith.

References Cited in the file of this patent

UNITED STATES PATENTS

1,555,647	Falconer	Sept. 29, 1925
2,111,713	Watson	Mar. 22, 1938
2,140,307	Belashk et al.	Dec. 13, 1938
2,183,415	Thommier	Dec. 12, 1939
2,677,885	Chaun	May 11, 1954
2,736,048	Gregoire	Feb. 28, 1956
2,766,470	Baker	Oct. 16, 1956
2,878,499	Pressman	Mar. 24, 1959
2,893,221	Bell	July 7, 1959