(No Model.)

# H. D. SWIFT.

## ELEVATOR GUARD.

No. 456,641. Patented July 28, 1891.

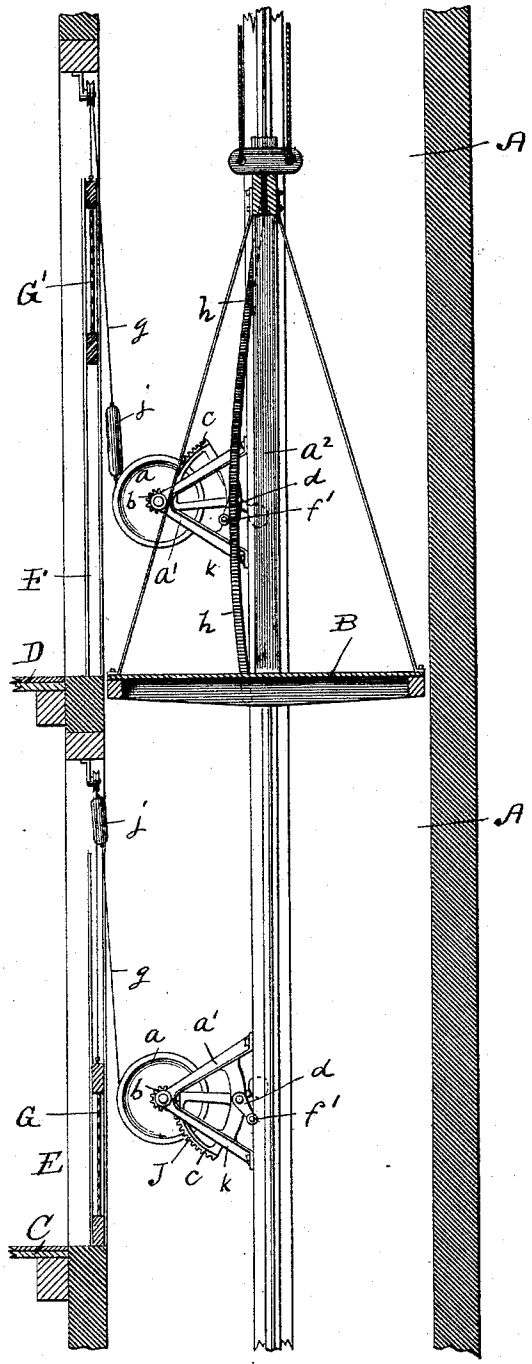


Fig. 1.

Fig. 2.

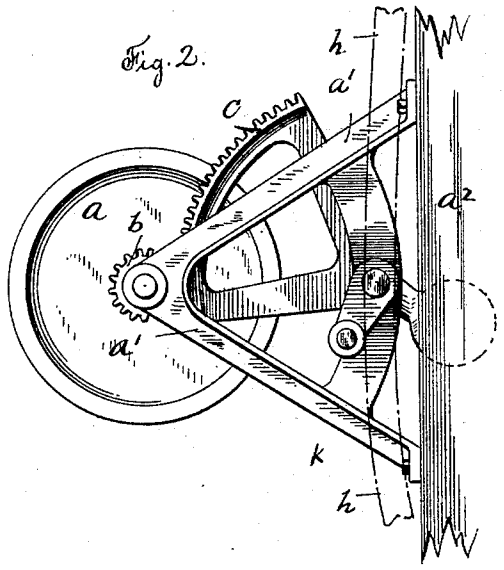


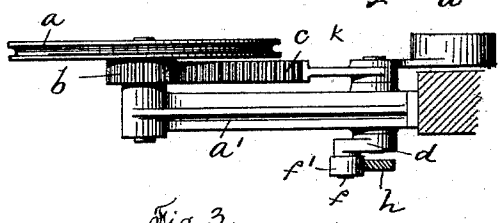


Fig. 3.

Witnesses
Chas. F. Schmelz.
H. M. Fowler

Inventor
Henry D. Swift,
By his Attorney
Rufus B. Fowler.

THE NORRIS PETERS CO., PHOTO-LITHO., WASHINGTON, D. C.

# UNITED STATES PATENT OFFICE.

HENRY D. SWIFT, OF WORCESTER, MASSACHUSETTS.

## ELEVATOR-GUARD.

SPECIFICATION forming part of Letters Patent No. 456,641, dated July 28, 1891.

Application filed March 14, 1890. Serial No. 343,828. (No model.)

*To all whom it may concern:*

Be it known that I, HENRY D. SWIFT, a citizen of the United States, residing at Worcester, in the county of Worcester and State of Massachusetts, have invented a new and useful Improvement in Elevator-Guards, of which the following is a specification, accompanied by drawings forming a part of the same, and in which—

Figure 1 represents a side view of an elevator-car, showing the connected mechanism by which a gate is raised and lowered to close the elevator-hatchway as the car is moved up or down. Fig. 2 is a side view, on a larger scale, of the winding-pulley and actuating apparatus; and Fig. 3 is a top view of the same.

Similar letters refer to similar parts in the different figures.

My invention relates to an apparatus by which a gate is actuated to close the hatchway of an elevator operated by the motion of the elevator-car itself, so that the hatchway is kept closed during the absence of the car and automatically opened by the approaching car.

In Fig. 1 of the drawings a central vertical sectional view is shown through the elevator well and car, A denoting the well; B, the elevator-car, which is raised and lowered by a hoisting-drum at the top in the usual and well-known manner, the hoisting-drum not being shown in the drawings.

C and D denote two of the floors, and E and F the hatchways or openings communicating with the elevator-well from each of the floors C and D.

G denotes a sliding gate closing the lower hatchway E, and G′ is a similar gate represented as raised and opening the upper hatchway F.

At each of the floors, and operating the gate closing the hatchway upon that floor, is the mechanism represented in an enlarged view in Figs. 2 and 3, and consisting of a scored pulley or drum $a$, journaled in the bracket $a'$, attached to a post $a^2$ or some suitable framework, or preferably turning loosely upon a stud held in the bracket $a'$. Attached to and turning with the scored pulley or drum is a pinion $b$, which is engaged by a sector $c$, attached to a short shaft $e$, journaled in the bracket $a'$ and carrying upon its opposite and inner end the crank-arm $d$, provided with a crank-pin $f$ and friction-roll $f'$. The gates at each of the hatchways are connected by a winding rope or cable $g$ with the winding-pulleys of the operating mechanism upon that floor, the rope or cable $g$ being carried over guide-pulleys in order to change the direction of its motion, as may be required.

To the elevator-car is attached a curved cam, bar, or blade $h$, which acts against the friction-roll $f'$ to impart an angular motion to the crank-arm $d$ and toothed sector $c$, thereby rotating the pinion and scored pulley $a$ and winding the rope or cable $g$ and raising the gate, as represented at G′ in Fig. 1. As the upward motion of the car A is continued, the curved bar or cam $h$ allows the crank-arm $d$ to assume its normal position, as represented at the lower floor in Fig. 1, allowing the gate to fall by its own gravity. The weights of the gates are counterbalanced in part by weights $j\,j$, attached to the ropes or cables, by which the gates are raised, and a counter-balance $j'$ is also attached to the sector $c$, or so applied as to counteract the weight of the sector. As the gate is allowed to fall, the sector will assume the position represented at J, Fig. 1, and in order to limit the downward motion of the sector and prevent the teeth of the sector from running out of engagement with the teeth of the pinion $b$, I place a pinion $k$ in the bracket $a'$, which serves as a stop.

I am aware that elevator-guards have been in use operated directly by the moving car. Such I do not claim broadly. Neither do I claim the use of an oscillating toothed sector actuated by the moving car for the purpose of rotating the winding-drum. In my device the actuating cam-plate H is attached to the car and placed within the elevator shaft or well, and the oscillating motion communicated by said cam-plate to the crank-arm D is conveyed outside the elevator shaft or well to the winding mechanism, which may thus be placed in any convenient position outside the framework or casing inclosing the elevator shaft or well.

I do not claim, broadly, the use of a cam-plate or the inclined surface carried by the moving car for the purpose of operating the winding mechanism; but

What I do claim, and desire to secure by Letters Patent, is—

The combination of a cam-plate *h*, carried by the moving car, shaft *e*, crank-arm *d*, provided with crank-pin *f*, and friction-roll *f'*, said friction-roll being placed within the elevator-shaft and in the path of said cam-plate, toothed sector *c*, attached to the opposite end of said shaft *e* and placed without the elevator-shaft and engaging a pinion upon the winding-drum, a winding-drum having an attached pinion rotated by said toothed sector, bracket *a'*, supporting said winding-drum, and a hatchway-gate connected by a flexible connection with said winding-drum, substantially as described.

Dated this 8th day of March, 1890.

HENRY D. SWIFT.

Witnesses:
D. WHEELER SWIFT,
RUFUS B. FOWLER.