Jan. 5, 1965 T. E. HAMPEL 3,164,445

GREASE VAPOR INCINERATOR

Filed Nov. 7, 1961 3 Sheets-Sheet 1

FIG. 1.

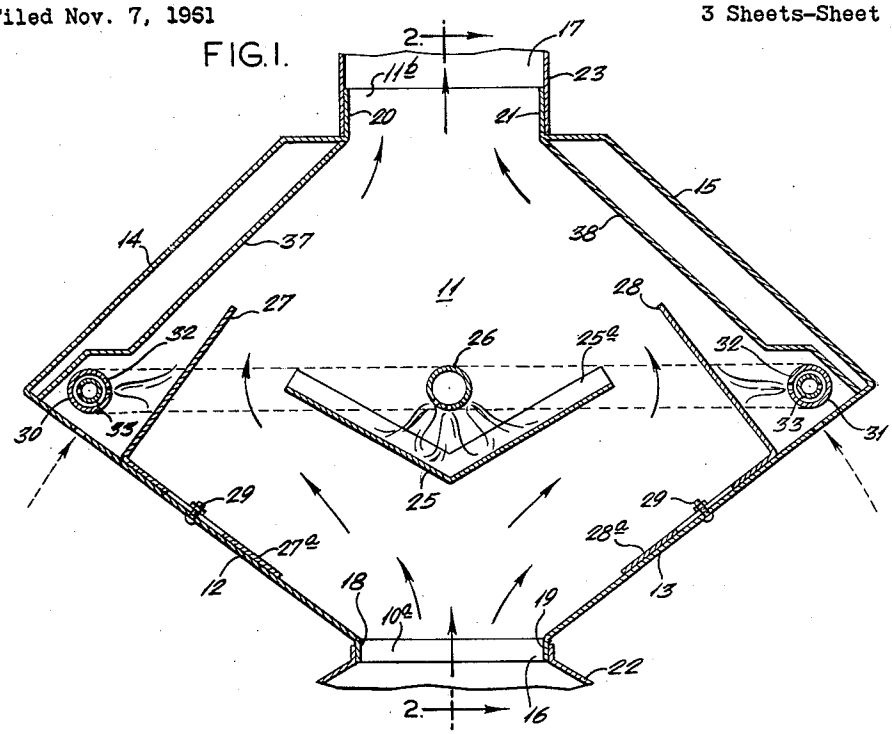

FIG. 2.

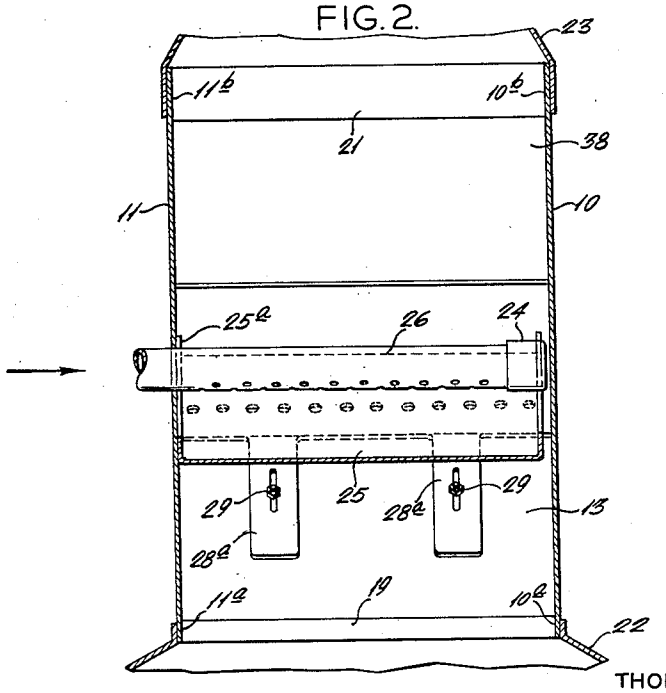

INVENTOR.
THOMAS E. HAMPEL

BY Howson & Howson
ATTYS.

GREASE VAPOR INCINERATOR

Filed Nov. 7, 1961 3 Sheets-Sheet 2

FIG. 5.

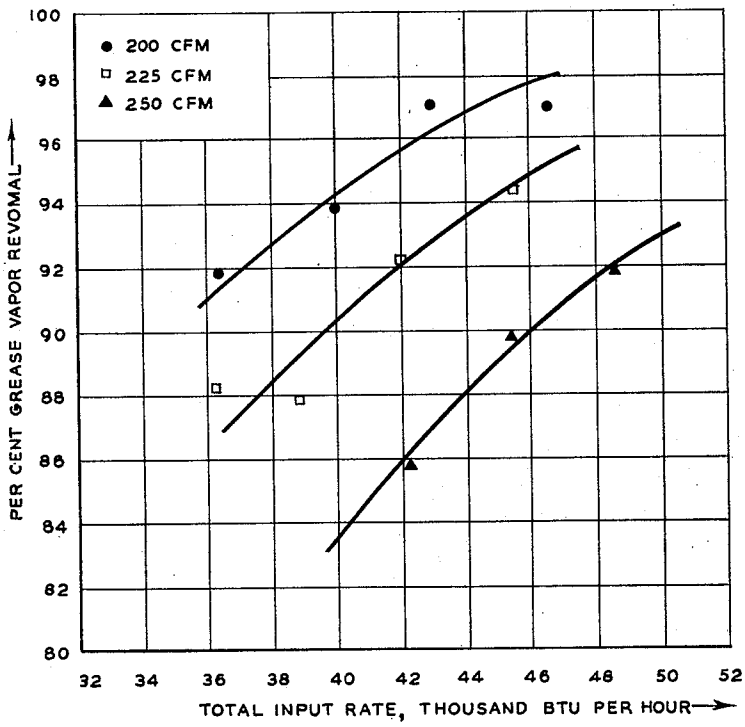

FIG. 3.

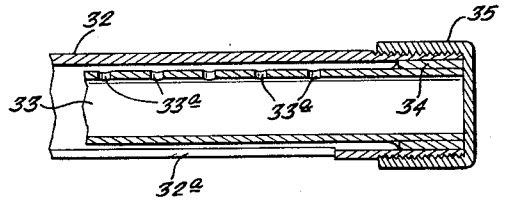

INVENTOR.
THOMAS E. HAMPEL

BY Howson & Howson
ATTYS.

Jan. 5, 1965 T. E. HAMPEL 3,164,445

GREASE VAPOR INCINERATOR

Filed Nov. 7, 1961 3 Sheets-Sheet 3

FIG. 4.

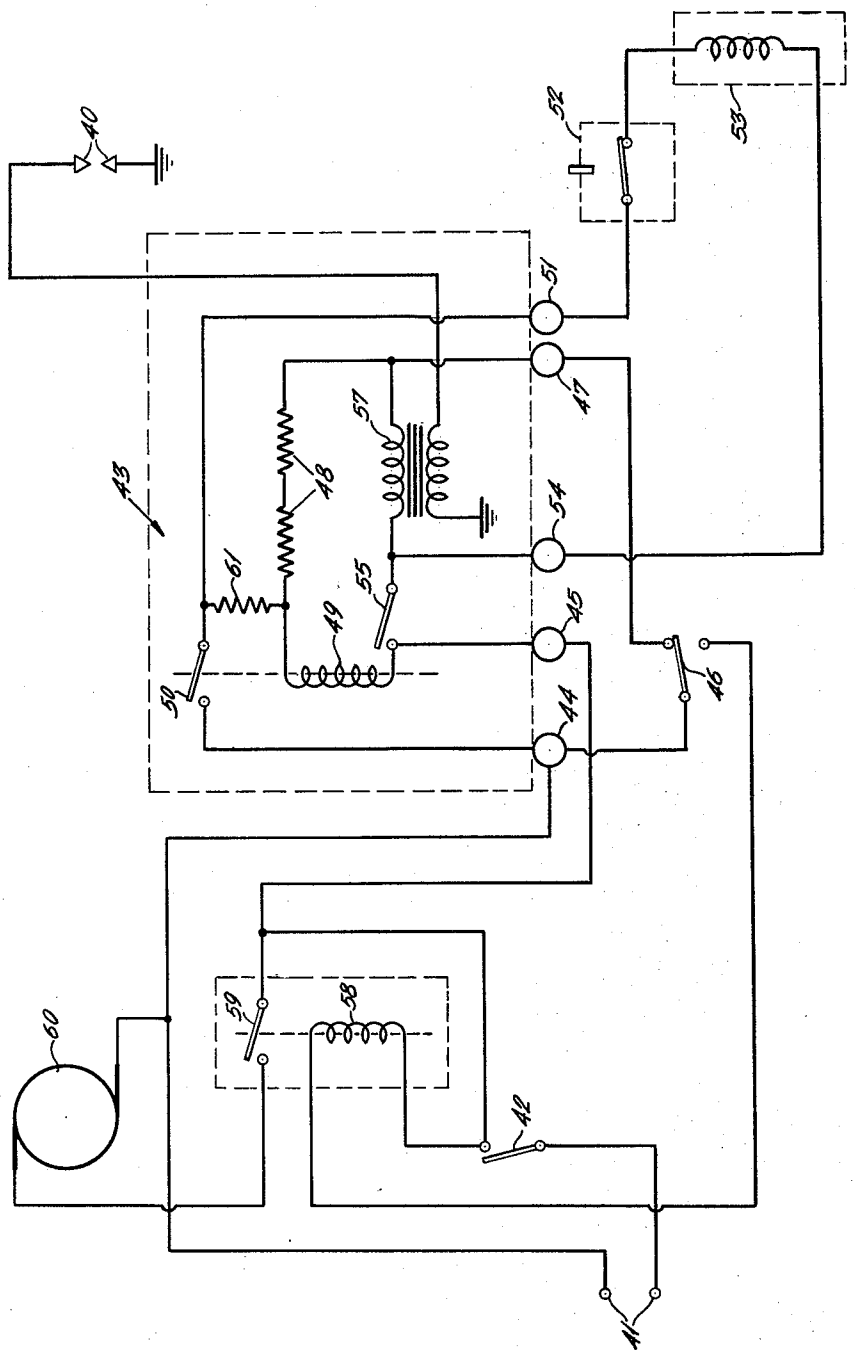

INVENTOR:
THOMAS E. HAMPEL
BY Howson & Howson
ATTYS.

United States Patent Office 3,164,445
Patented Jan. 5, 1965

3,164,445

GREASE VAPOR INCINERATOR

Thomas E. Hampel, Shaker Heights, Ohio, assignor to American Gas Association, Incorporated, New York, N.Y., a corporation of New York

Filed Nov. 7, 1961, Ser. No. 150,834
8 Claims. (Cl. 23—277)

This invention relates to the harmless disposal of grease vapors produced in cooking. More specifically this invention relates to a grease vapor incinerator for use in an air exhaust system employed with a cooking operation. In order to accomplish this incineration a chamber of enlarged cross section is employed in the exhaust system and provided with heated baffle means positioned to intercept and deflect the air entering the chamber and ignite the grease vapors carried by the air.

Disposal of cooking exhausts, and particularly grease vapors, has been a serious problem especially in restaurants and commercial establishments where large amounts of fried foods are prepared. Of necessity such places are equipped with cooking air exhaust systems usually consisting of duct work in association with some sort of exhaust fan. The grease vapor in the exhaust air as it strikes the side walls of these ducts tends to plate out or stick in a film to the side walls with the result that over a relatively short period of time a substantial amount of grease accumulates. This accumulated grease constitutes a major fire hazard especially when frequent cleaning is not undertaken but even where frequent cleaning is provided. Such conditions have accounted for a major percentage of commercial property fires which are disruptive of business, destructive of property and dangerous to personnel and patrons.

In the past filters have been employed in an effort to remove as much grease as possible. Frequently a grease filter is mounted in the exhaust hood over the stove across the entrance to the duct. Such filters operate by providing larger areas for condensation of grease vapor as the exhaust is forced through tortuous paths through the filter of wire mesh on the tube. The construction of these filters is such that heat and moisture are permitted to be carried out with the main body of the exhaust air as the grease is trapped. The conventional grease filter has two primary disadvantages. First, even a new filter does not permit all cooking odors to pass through so that the restaurant is filled with the smell of cooking food. In the second place, as the grease collects the filter becomes less effective to collect more grease and at the same time the passage of exhaust air is impeded. This necessitates frequent replacement or cleaning of the filter, and, although this is less trouble than cleaning the exhaust ducts more frequently, it frequently becomes a nuisance to such a point that the cleaning is not done as often as desirable.

Other means of grease removal have been proposed but have attained little commercial success because of even more serious limitations than experienced with filters.

The present invention contemplates a system for removal of grease vapor from cooking air exhausts in such a way that the free flow of air out the exhaust duct work is not impeded. Thus cooking odors are free to be exhausted with the air and do not become generally dispersed within the restaurant. Moreover, even though the free flow of air is enhanced, the grease is removed more effectively than has heretofore been possible with the use of known filters and to such an extent that exhaust ducts rarely, if ever, require cleaning.

More specifically the present invention relates to a grease vapor incinerator for disposing of cooking waste in an exhaust system comprising a chamber within the

exhaust system. Baffle means is provided within the chamber for intercepting and deflecting the exhaust air and means for heating the baffle means to a temperature sufficient to ignite grease in the system upon contact is provided. The system preferably has a vertical arrangement and is provided with a baffle above an intake aperture at the bottom of the chamber and additional baffles at the sides of the chamber toward which the exhaust is deflected. The chamber is advantageously of such shape that the vertical end walls are parallel and the intermediate structure on a section taken parallel to the end walls is of general diamond shape. The baffles extend preferably between the end walls one through the middle of the chamber positioned and arranged to deflect air upwardly toward a pair of baffles extending along the upwardly converging upper walls of the chamber.

For a better understanding of the present invention reference may be had to the accompanying drawings in which:

FIG. 1 illustrates in vertical section through the principal baffle plates a preferred embodiment of the present invention;

FIG. 2 is a sectional view of a structure shown in FIG. 1 taken along line 2—2;

FIG. 3 is a detailed sectional view showing one of the side burner elements shown in section;

FIG. 4 is a circuit diagram of an electrical ignition circuit and safety controls; and

FIG. 5 is a graph showing percentage of grease vapor removed versus the input rate of the burners.

Referring to FIGS. 1 and 2, it will be seen that the grease vapor incinerator of the present invention in this preferred embodiment consists of a chamber having parallel vertical end walls. Between these parallel end walls are a pair of lower side walls 12 and 13 and a pair of upper side walls 14 and 15 together providing a generally diamond shaped enclosure. Apertures 16 and 17 at the bottom and top of the chamber are defined by rectangular coupling collars consisting in part of extension 10*a* and 11*a* at the bottom and extensions 10*b* and 11*b* at the top of the walls 10 and 11. Parallel walls 18 and 19 at the bottom and corresponding parallel walls 20 and 21 at the top complete the respective collars. The collar thus bounding lower aperture 16 mates with a similar snugly fitting collar on exhaust hood generally designated 22 in the embodiment shown. An exhaust hood is preferably immediately below the grease incinerator and directly over the cooking appliance at which the grease vapors are generated. Its dimensions may commonly be much greater than the grease vapor incinerator and it converges upwardly to direct the grease and cooking odor ladened exhaust air through the aperture 16 into the chamber of the grease vapor incinerator. After passing through the incinerator the exhaust air is drawn into the main exhaust duct work. The exhaust fan (not shown) which pulls the exhaust air upwardly through the hood and grease vapor incinerator, is preferably located at some place along the duct work accessible to servicing. The exhaust duct may be of the same size as the aperture or be of different size. A smaller duct requires an upwardly converging coupling member to reduce the size of the collar at aperture 17 to that of the exhaust duct size. This adapter may be separate or integral with some other part of the structure. It is shown in place in FIG. 2 as a separate member generally designated 23.

Within the chamber above the bottom aperture is a transverse baffle positioned to intercept and deflect air entering through the bottom aperture. This baffle 25 is preferably a V-shaped structure having suitable end flanges 25*a* for fixing it to the end walls 10 and 11. Above (behind) the V-shaped baffle is a pipe burner 26 prefer-

ably connected to a suitable supply of fuel through an appropriate control valve. The pipe is capped by end cap 24 at the end opposite the end connected to the supply and is perforated on its underside to provide three parallel rows of holes through which the gas may flow toward the back side of the baffle plate 25 in radially distributed jets over 90°. These jets when ignited are adapted to heat the back surface of the baffle applying essentially all other heat thereto.

Air being drawn upwardly by the exhaust fan in the duct above the incinerator is deflected by baffle 25 laterally to one side or the other and into one of the baffles 27 or 28 which extend between parallel end walls 10 and 11 from bottom walls 12 and 13 respectively to some point beyond the projected ends of baffle 25. These baffles are adjustably supported in position to be moved toward or away from the ends of baffle 25 by easily adjusted fasteners 29 such as nut and bolt combinations. These fasteners clamp L-shaped flanges 27*a* and 28*a* to the bottom walls 12 and 13, the flanges being slotted so that the adjustment described can be made. Behind the symmetrically arranged, upwardly converging flanges 27 and 28 are similar burners 30 and 31. As best seen in FIG. 3 each of these burners consists of a pair of concentric pipes 32 and 33 separated at the end illustrated by suitable spacer means 34 and capped conveniently by common cap member 35. At the gas supply end gas-tight ring spacer similar to spacer 34 separates pipes 32 and 33 and pipe 33 is connected to the gas supply. Gas fed into pipe 33 flows through the row of longitudinally spaced apertures 33*a* into pipe 32 and out the diametrically opposed slot 32*a*. Slot 32*a* as seen in FIG. 1 is preferably directed inwardly along the backside of the appropriate baffle 27 or 28 in order to heat that baffle. In view of the proximity of flame from the burner to this area a double walled structure is provided by the addition of double inner walls 37 and 38 below upper walls 14 and 15. The space between these double walls may be dead air space or other suitable insulation tending to keep the outer wall cooler.

Ignition may be supplied by a gas pilot or other suitable means but is preferably provided by an electric spark generated at spark electrodes adjacent burner 26 through the circuit shown in FIG. 4. Referring to FIG. 4 the spark electrodes 40 are shown such that one electrode is connected to ground and the other to a source of high potential. The spark electrodes are located proximate to the burner. Terminals 41 are connected to a source of power such that, when switch 42 is closed, voltage will be applied to the combination transformer and warp switch generally designated 43 at terminals 44 and 45. Switch 46 is placed as to sense the existence of a flame and until flame causes switching terminal 44 is connected to terminal 47 through switch 46. In this way power is applied through dropping resistors 48 to the coil 49 of relay which is thereby energized, closing relay switch 50. Power is thus applied to terminal 51 through switch 50 from terminal 44. From terminal 51 current may flow through high temperature limit control switch 52, which is preferably of the automatic reset type, the control coil 53 of an automatic gas valve which when energized allows gas to flow to the burners, back through terminal 54 through warp switch 55 to terminal 45, thus completing the circuit across the power supply from terminals 41. At the same time a surge of power appears across the primary of transformer 57 and induces a surge in the secondary thereof which generates a spark across electrodes 40. The spark ignites the gas flowing from the buner 26. When sufficiently heated thermostatic flame sensing switch 46 moves to the normally open terminal thereby closing the circuit across relay coil 58 and closing the switch 59 to energize the blower drive motor 60. In the event the temperature of the flame rises too high switch 52 will open thereby automatically shutting off the gas control valve by deenergizing its operating coil 53. Should the current at any time become too heavy the warp switch 55 will open and cause current flow to proceed through resistors 48 and/or resistor 61, thereby limiting the current flow to within safe limits. If the flame fails, the switch 46 will change position thereby turning off the blower and its cooling air until reignition can occur.

In one grease vapor incinerator built and used successfully the chamber built of 18 gage stainless steel was 18 inches by 8 inches wide and 10½ inches high. The inlet and outlet openings of the incinerator were 8 inches by 4 inches with a collector transition piece over the top opening converging into a 4 inch diameter flue pipe. The side baffles were 4 inches by 8 inches and the center baffle 8 inches by 8 inches, each made of stainless steel. A row of ⅛ inch holes were provided in the incinerator below each of the sde burners to allow control of secondary air necessary for burning. The center burner received its secondary air from the exhaust being drawn through the incinerator. The position of the side baffles were variable not only to change the air flow space but to permit adjustment of the flame space between the wall and the baffle.

All three burners were at the same level about 5 inches above the inlet with the side burners being of the slotted type and the center burner of the drilled port type. Stainless steel tubing was used in all burners with the center burner being constructed of ½ inch tubing while the side burner inserts were ⅜ inch tubing fitted into ½ inch tubing. The port size of the ports facing away from the slot in the side burners was number 70DMS, whereas the port size for the three rows of the center burner ports was number 75DMS. The slot size for the side burners was .02 inch wide. The drilled ports in the inner tubing of the side burners were only 1½ inches apart and only five ports each were employed. The center burner was rated for 20,000 B.t.u. per hour whereas the side burners were each rated at 10,000 B.t.u. per hour each.

FIG. 5 shows what happened to the specific incinerator described in terms of efficiency for a given blower rate as the B.t.u. per hour total was increased. It will be noted that as the B.t.u. per hour increase for a given blower rate efficiency tended to increase to a certain point. On the other hand as blower rate increased, efficiency tended to decrease for a given B.t.u. per hour rate. Grease incineration with the device disclosed reached approximately 97% effectiveness using 47,250 B.t.u. per hour of gas ignited heat with a 200 cubic foot per minute value of exhaust air. With the configuration described the average baffle temperatures were 905° F. A 10% increase in air flow rate will reduce efficiency as much as a 20% reduction in gas input rate around this area of operation. When baffle temperatures were allowed to fall below approximately 750° F. grease or charred particles occurred on the baffles but at the higher temperatures the baffles remained clean and grease free.

Comparison of the efficiency of the grease vapor incinerator and filters show substantial differences in effect. Filters of the lower cost, low velocity variety had a peak efficiency of only 77.9% grease removal and standard low velocity filters at their peak performance had only 82.9% efficiency. Filters in both cases required frequent replacement and for purpose of tests were replaced more often than they would normally be in a typical restaurant situation. It was particularly noted that the incinerator of the present invention does not require as heavy a blower motor because it is not necessary to pump the air through a filter under increasingly more difficult conditions.

The gas fired burners could obviously be replaced by suitable electric heaters with appropriate modification in structure and circuitry, and such electric heaters could be of a variety of known types. Other modifications in the structure and arrangement of the system will of

course occur to those skilled in the art. For example, even greater efficiencies could probably be achieved by the use of electronic precipitation techniques in combination with the baffles of the grease vapor incinerator described.

All modifications within the scope of the claims are intended to be within the scope and spirit of the present invention.

I claim:

1. A grease vapor incinerator for the disposal of particulate matter from cooking operations, comprising a chamber providing a tortuous course for a main air stream with an open inlet, an outlet connected to an exhaust system, imperforate baffle means above the inlet transversely arranged relative to the directions of flow of the main air stream entering the inlet and large enough to deflect substantially all of said main air stream and cause separation and collection by impingement of the particulate matter upon the side of the baffle means exposed to said main air stream, and heating means located on the opposite side of said baffle means and shielded from said main air stream whereby the baffle means is heated to a temperature above the ignition point of said particulate matter collected on said baffle means so that said particulate matter is removed therefrom as gaseous products of combustion.

2. The grease vapor incinerator of claim 1 in which the baffle means includes a first baffle directly in the flow path and extending entirely across said flow path and baffles to the sides of the first baffle and extending entirely across the flow paths of air stream diverted by the first baffle.

3. The grease vapor incinerator of claim 1 in which the chamber is generally diamond shaped in one dimension in vertical cross section and rectangular in vertical cross section at 90° thereto with flow entrance coupling means truncating the lower vertex and providing the inlet and flow duct exhaust coupling means truncating the upper vertex and providing the outlet.

4. The grease vapor incinerator of claim 3 in which the baffle means extending entirely across the rectangular cross section includes a baffle plate generally horizontally arranged so that its edges are above its middle portion.

5. A grease vapor incinerator for the disposal of particulate matter from cooking operations comprising a chamber in the exhaust system having vertical end walls and walls extending generally perpendicularly between them providing a chamber of diamond shaped vertical cross section in one direction and rectangular cross section at 90° thereto, inlet and outlet apertures through which the chamber is coupled into the exhaust system at the bottom and top vertices of the chamber, an imperforate baffle within the chamber above the inlet transversely arranged relative to the direction of flow of the main air stream entering the inlet, extending between the parallel walls and across the inlet and spaced above the inlet and of sufficient size greater than inlet size to deflect essentially all the main air stream, while intercepting and collecting by impingement the particulate matter upon the side of the baffle means exposed to said main air stream, and heating means located on the opposite side of said baffle means and shielded from said main air stream whereby essentially all of the heat is applied directly to heat the baffle means to a temperature above the ignition point of said particulate matter collected on said baffle means so that said particulate matter is removed therefrom as gaseous products of combustion.

6. The incinerator of claim 5 in which additional imperforate baffles extending between the parallel walls are provided extending outwardly from the upwardly divergent walls and extending transversely entirely across the flow paths of the air streams diverted by the transverse baffle and large enough to deflect substantially all of said air stream and cause separation and collection by impingement of the particulate matter upon the side of each baffle exposed to the air stream together with heating means located on the opposite side of each additional baffle and shielded from said air stream whereby said additional baffle means are heated to a temperature above the ignition point of said particulate matter collected on said baffle means so that said particulate matter is removed therefrom as gaseous products of combustion.

7. A grease vapor incinerator for the disposal of particulate matter from cooking operations comprising exhaust duct means, means for producing air flow through the exhaust duct and a chamber providing a tortuous course for a main air stream having an open inlet, an outlet connected to the exhaust duct, imperforate baffle means above the inlet transversely arranged relative to the direction of flow of the main air stream entering the inlet and large enough to deflect substantially all of said main air stream and cause separation and collection by impingement of the particulate matter upon the side of the baffle means exposed to said main air stream and heating means located on the opposite side of said baffle means and shielded from said main air stream whereby the baffle means is heated to a temperature above the ignition point of said particulate matter collected on said baffle means so that said particulate matter is removed therefrom as gaseous products of combustion.

8. The grease vapor incinerator of claim 1 in which the heating means is comprised of gas burners.

References Cited by the Examiner

UNITED STATES PATENTS

1,137,424	4/15	Ricketts	110—8
1,963,817	6/34	Wiederhold	126—299
2,177,258	10/39	Jares	23—277
2,889,002	6/59	Kocee	23—277

MORRIS O. WOLK, *Primary Examiner.*

MAURICE A. BRINDISI, *Examiner.*