(12) INTERNATIONAL APPLICATION PUBLISHED UNDER THE PATENT COOPERATION TREATY (PCT)

(19) World Intellectual Property Organization
International Bureau

(43) International Publication Date
13 December 2007 (13.12.2007)

PCT

(10) International Publication Number
WO 2007/143225 A3

(51) International Patent Classification:
A61B 5/08 (2006.01)

(21) International Application Number:
PCT/US2007/013582

(22) International Filing Date: 7 June 2007 (07.06.2007)

(25) Filing Language: English

(26) Publication Language: English

(30) Priority Data:
60/804,170 7 June 2006 (07.06.2006) US
60/804,169 7 June 2006 (07.06.2006) US

(71) Applicant *(for all designated States except US)*: **ABBOTT DIABETES CARE, INC.** [US/US]; 1360 South Loop Road, Alameda, CA 94502 (US).

(72) Inventors; and
(75) Inventors/Applicants *(for US only)*: **McGARRAUGH, Geoffrey, V.** [US/US]; 6191 Virgo Road, Oakland, CA 94611 (US). **FELDMAN, Benjamin, J.** [US/US]; 5830 Colby Street, Oakland, CA 94618 (US). **PEYSER, Thomas, A.** [US/US]; 2030 Gordon Avenue, Menlo Park, CA 94025 (US). **MAZZA, John, C.** [US/US]; 7901 Winged Foot Court, Pleasanton, CA 94588 (US). **GOODNOW, Timothy, T.** [US/US]; 8280 Regency Drive, Pleasanton, CA 94588 (US). **REBRIN, Kerstin** [DE/US]; 328 Channing Way, Alameda, CA 94502 (US).

(74) Agent: **OH, Kuni**; Jackson & Co., LLP, 6114 La Salle Ave., #507, Oakland, CA 94611-2802 (US).

(81) Designated States *(unless otherwise indicated, for every kind of national protection available)*: AE, AG, AL, AM, AT, AU, AZ, BA, BB, BG, BH, BR, BW, BY, BZ, CA, CH, CN, CO, CR, CU, CZ, DE, DK, DM, DO, DZ, EC, EE, EG, ES, FI, GB, GD, GE, GH, GM, GT, HN, HR, HU, ID, IL, IN, IS, JP, KE, KG, KM, KN, KP, KR, KZ, LA, LC, LK, LR, LS, LT, LU, LY, MA, MD, ME, MG, MK, MN, MW, MX, MY, MZ, NA, NG, NI, NO, NZ, OM, PG, PH, PL, PT, RO, RS, RU, SC, SD, SE, SG, SK, SL, SM, SV, SY, TJ, TM, TN, TR, TT, TZ, UA, UG, US, UZ, VC, VN, ZA, ZM, ZW.

(84) Designated States *(unless otherwise indicated, for every kind of regional protection available)*: ARIPO (BW, GH, GM, KE, LS, MW, MZ, NA, SD, SL, SZ, TZ, UG, ZM, ZW), Eurasian (AM, AZ, BY, KG, KZ, MD, RU, TJ, TM), European (AT, BE, BG, CH, CY, CZ, DE, DK, EE, ES, FI, FR, GB, GR, HU, IE, IS, IT, LT, LU, LV, MC, MT, NL, PL, PT, RO, SE, SI, SK, TR), OAPI (BF, BJ, CF, CG, CI, CM, GA, GN, GQ, GW, ML, MR, NE, SN, TD, TG).

Published:
— *with international search report*
— *before the expiration of the time limit for amending the claims and to be republished in the event of receipt of amendments*
— *the filing date of the international application is within two months from the date of expiration of the priority period*

(88) Date of publication of the international search report:
18 September 2008

(15) Information about Correction:
Previous Correction:
see Notice of 15 May 2008

(54) Title: ANALYTE MONITORING SYSTEM AND METHOD

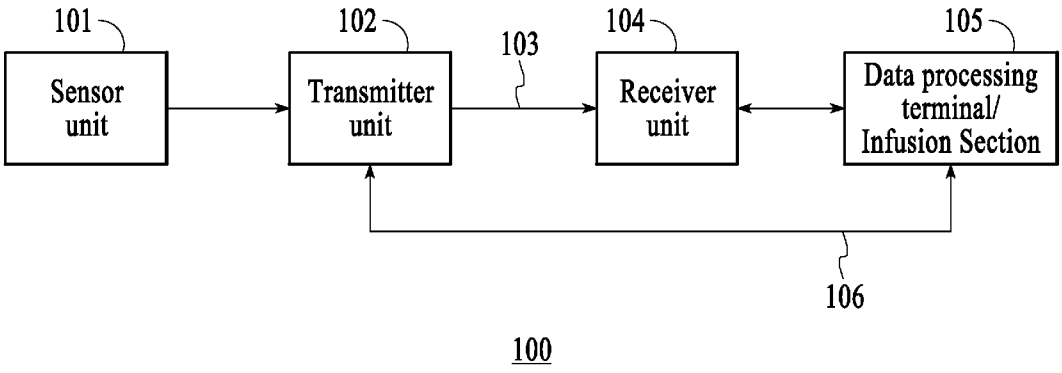

(57) Abstract: Devices and methods for monitoring an analyte are provided. Embodiments include continuous analyte sensors having a high degree of accuracy.

WO 2007/143225 A3

INTERNATIONAL SEARCH REPORT

International application No.
PCT/US07/13582

A. CLASSIFICATION OF SUBJECT MATTER
IPC: **A61B 5/08**(2006.01)

USPC: 600/347
According to International Patent Classification (IPC) or to both national classification and IPC

B. FIELDS SEARCHED

Minimum documentation searched (classification system followed by classification symbols)
U.S. : 600/345-350, 365;

Documentation searched other than minimum documentation to the extent that such documents are included in the fields searched
none

Electronic data base consulted during the international search (name of data base and, where practicable, search terms used)
none

C. DOCUMENTS CONSIDERED TO BE RELEVANT

Category *	Citation of document, with indication, where appropriate, of the relevant passages	Relevant to claim No.
Y --- A	Guerci et al, "Clinical Performance of CGMS in Type I Diabetes Patients Treated by Continuous Subcutaneous Insulin Infusion using Insulin Aanalogs," Diabetes Care, 2003, volume 26, pp. 582-589	1-4, 7-10, 21-32, 34-40, 53-56, 58-63, 65-66, 68-82, 86, 87 --- 54, 6, 12-20., 64, 83-85
Y --- A	US, 6562001, B2 (Lebel et al) 13 may 2003 (13.05.2003) see entire document.	1-5, 7-40, 53-87 --- 6
X --- Y	US, 6083710 A1 (Heller et al) 04 July 2000 (04.07.200) see entire document	41-47, 52 --- 21-40, 48-51

☒ Further documents are listed in the continuation of Box C. ☐ See patent family annex.

* Special categories of cited documents:

"A" document defining the general state of the art which is not considered to be of particular relevance

"E" earlier application or patent published on or after he international filing date

"L" document which may throw doubts on priority claim(s) or which is cited to establish the publication date of another citation or other special reason (as specified)

"O" document referring to an oral disclosure, use, exhibtion or other means

"P" document published prior to the international filing date but later than the priority date claimed

"T" later document published after the international filing date or priority date and not in conflict with the application but cited to understand the principle or theory underlying the invention

"X" document of particular relevance; the claimed invention cannot be considered novel or cannot be considered to involve an inventivestep when the document is taken alone

"Y" document of particular relevance; the claimed invention cannot be considered to involve an inventive step when the document is combined with one or more other such documents, such combination being obvious to a person skilled in the art

"&" document member of the same patent family

Date of the actual completion of the international search	Date of mailing of the international search report
26 May 2008 (26.05.2008)	08 JUL 2008
Name and mailing address of the ISA/US Mail Stop PCT, Attn: ISA/US Commissioner for Patents P.O. Box 1450 Alexandria, Virginia 22313-1450 Facsimile No. (571) 273-3201	Authorized officer ROBERT L. NASSER Telephone No. 571-000-0000

Form PCT/ISA/210 (second sheet) (April 2007)

INTERNATIONAL SEARCH REPORT

International application No.
PCT/US07/13582

C (Continuation). DOCUMENTS CONSIDERED TO BE RELEVANT

Category *	Citation of document, with indication, where appropriate, of the relevant passages	Relevant to claim No.
Y	US, 6560471, B1 (Heller et al) 06 May 2003 (06.05.2003) see entire document.	72-75
Y	US, 6254586, B1 (Mann et al) 03 July 2001 (03.07.2001) see entire document.	28-30, 48, 49
Y	US, 6558320 B1 (Causey III et al) 6 May 2003 (05.06.2003) see entire document.	31, 32, 50, 51
Y	Choleau et al, "Calibration of a subcutaneous amperometric glucose sensot implanted for 7 days in diabetic patients part 2. Sup[eriority of the one point calibration method" Biosensors and Bioelectronics, volum 17, issue 8, August 2002, pp. 647-654	11, 20, 33, 58, 67,
Y	US 6591125, B1 (Buse et al) 08 July 2003 (08.07.2003) see entire document.	70, 71