A. B. SHAW.

ATTACHING DOOR-KNOBS TO SPINDLES.

No. 194,056. Patented Aug. 14, 1877.

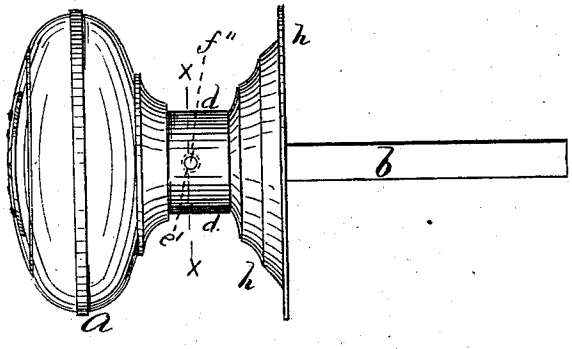

Fig. 1.

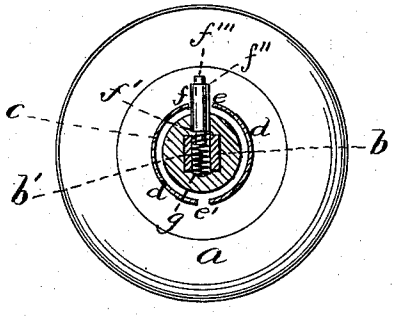

Fig. 2

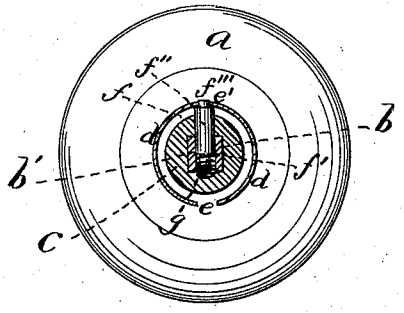

Fig. 3

A. B. Shaw

INVENTOR

WITNESSES

B. W. Williams

John E. Freeman

By his Att'ys.

Henry W. Williams & Co

N. PETERS, PHOTO-LITHOGRAPHER, WASHINGTON, D. C.

UNITED STATES PATENT OFFICE.

AI B. SHAW, OF MEDFORD, ASSIGNOR TO MARTIN W. CARR, OF SOMERVILLE, AND HIRAM W. BROOKS, OF CAMBRIDGE, MASSACHUSETTS.

IMPROVEMENT IN ATTACHING DOOR-KNOBS TO SPINDLES.

Specification forming part of Letters Patent No. **194,056**, dated August 14, 1877; application filed January 30, 1877.

To all whom it may concern:

Be it known that I, AI B. SHAW, of Medford, in the county of Middlesex and State of Massachusetts, have invented a new and valuable Improvement in Connection with Door-Knobs; and I do hereby declare that the following is a full, clear, and exact description thereof, reference being had to the accompanying drawing, and to the letters of reference marked thereon.

This invention relates to the means for attaching and securing the knob and socket to the spindle.

In the accompanying drawings, Figure 1 is a side view of a door-knob and spindle to which my invention is applied. Figs. 2 and 3 are sections through line *x x*, Fig. 1, of the same, in different positions or stages of attachment.

Similar letters of reference indicate corresponding parts.

a represents the knob, and *b* the spindle, provided with one or more holes, *b'*. *c* is the socket, having a hole through one side. *d* is a sleeve placed upon the socket *c*, and provided with a hole, *e*, and a smaller hole, *e'*. *f* is a pin. *h* is the rose or collar placed snugly against the sleeve *d*, and provided with a small flange, which extends under the said sleeve and keeps it in place.

To operate my device, place the spindle in the socket *c*, with the hole *b'* under the hole in the socket; then place the sleeve *d* upon the socket *c*, with the larger hole *e* directly over the hole in the side of the socket and the spindle-hole; then drop the pin *f*, with the spiral spring *g* upon its lower end, into the holes, as shown in Fig. 2. It will be seen, by observing the said Fig. 2, that the spring *g* lies between the under side of the socket *c* and the shoulder *f''* upon the pin *f*. Next, press the pin down below the sleeve *d*, and turn the sleeve round so as to bring the smaller hole *e'* over the upper end of the pin *f*, as shown in Fig. 3. The spring is now compressed. The head *f'''* lies in the hole *e'*, flush with the surface of the sleeve *d*, while the remainder of the pin is prevented from coming through the hole *e'* by the shoulder *f''* The opening *e* is large enough to receive any part of the pin *f*, while the opening *e'* is only large enough to allow the head *f'''* to pass through. The rose *h* having been placed in position, the arrangement is complete, as seen in Fig. 1.

It will be seen that this construction does away with the screw in ordinary use, which is very liable to fall out or become loose, and allows the use of a cast-iron socket. A fine finish is given to the sleeve *d*, which entirely covers the iron socket. The sleeve *d* is entirely independent of the rose.

This invention provides a sure and firm attachment, which cannot be shaken loose, and is very ornamental in appearance.

Having thus fully described my invention, what I claim, and desire to secure by Letters Patent, is—

The combination, with the spindle *b*, socket *c*, and rose *h*, of the sleeve *d*, provided with the larger opening *e* and smaller opening *e'*, and the pin *f*, provided with shoulders *f'* and *f''*, and spring *g*, all constructed and arranged substantially as and for the purposes herein set forth.

AI B. SHAW.

Witnesses:

HENRY W. WILLIAMS,

B. W. WILLIAMS.