Feb. 15, 1949. C. G. KAEHMS 2,461,984

FLAW DETECTOR MOUNTING AND CONTROL

Filed May 15, 1945 5 Sheets-Sheet 1

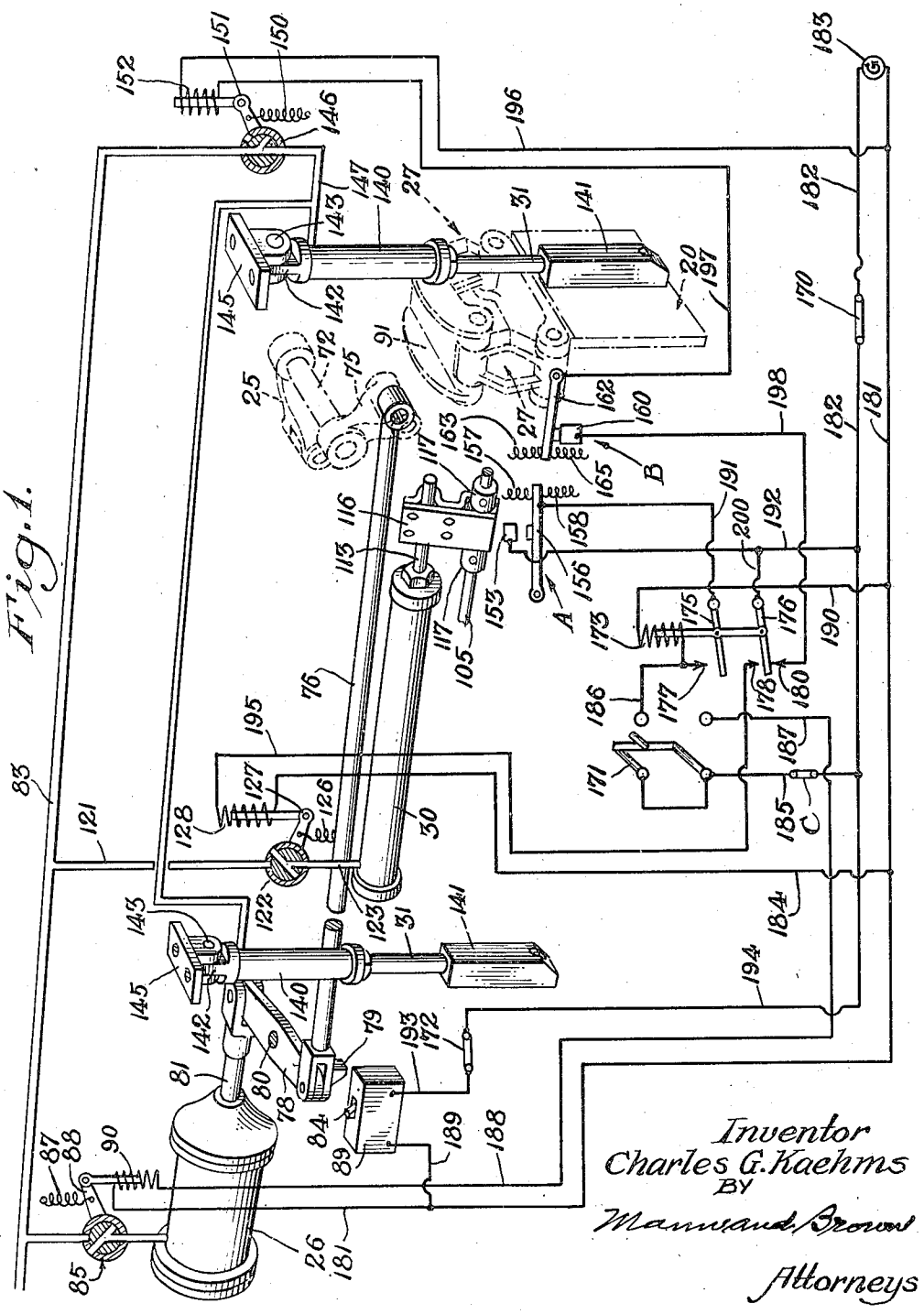

Feb. 15, 1949. C. G. KAEHMS 2,461,984

FLAW DETECTOR MOUNTING AND CONTROL

Filed May 15, 1945 5 Sheets-Sheet 2

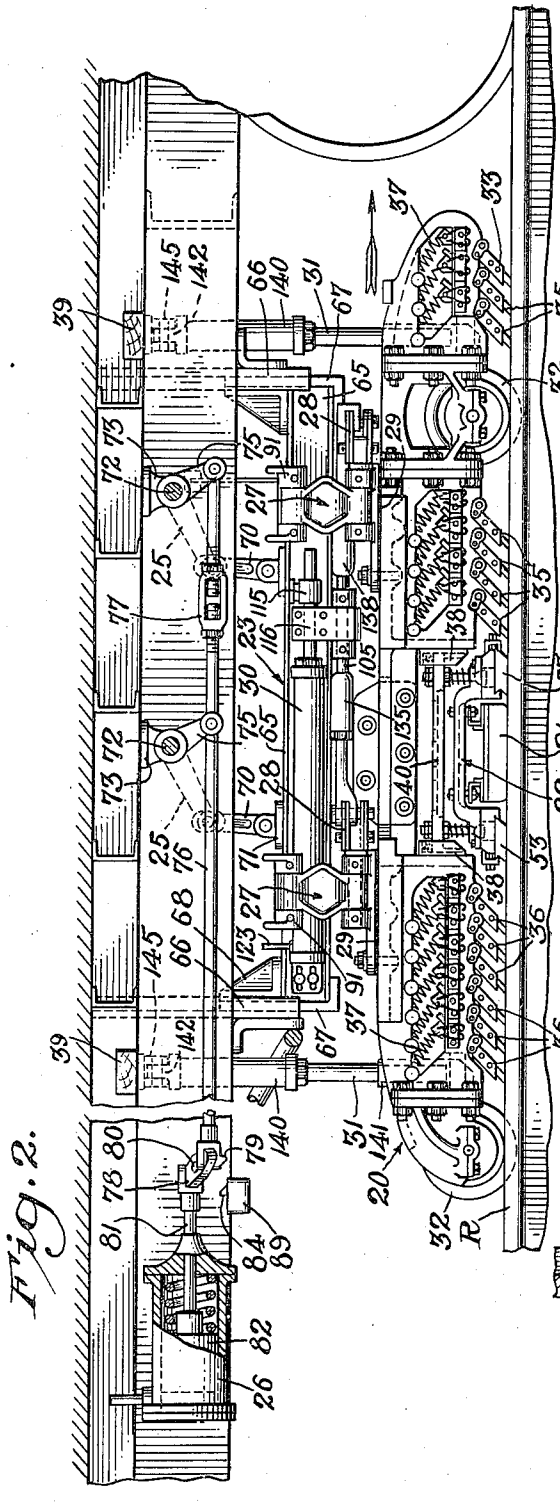

Fig. 2.

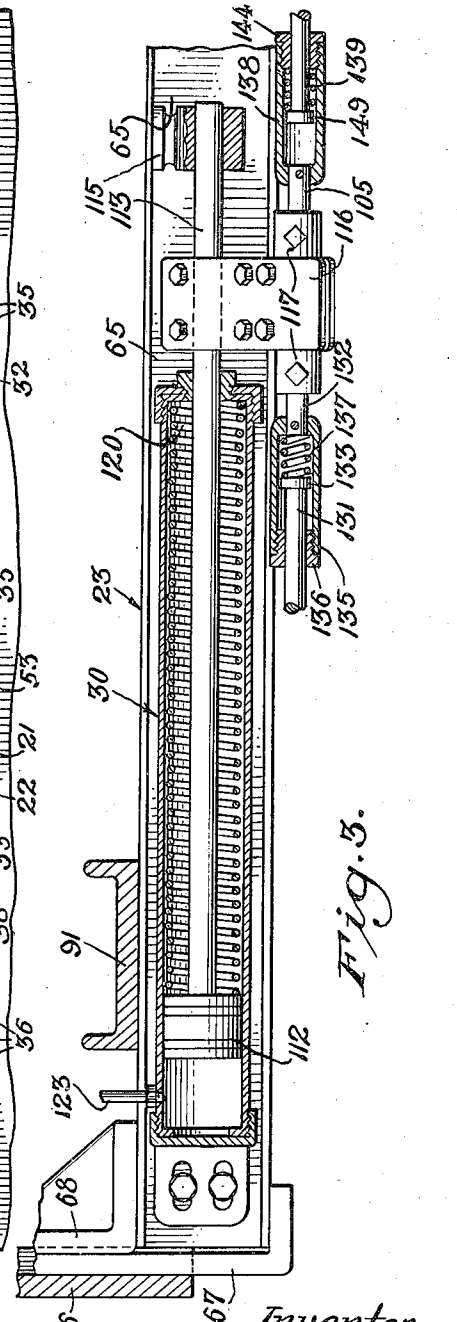

Fig. 3.

Inventor
Charles G. Kaehms
By
Mannand, Brown
Attorneys

Feb. 15, 1949. C. G. KAEHMS 2,461,984

FLAW DETECTOR MOUNTING AND CONTROL

Filed May 15, 1945 5 Sheets-Sheet 3

Fig. 4.

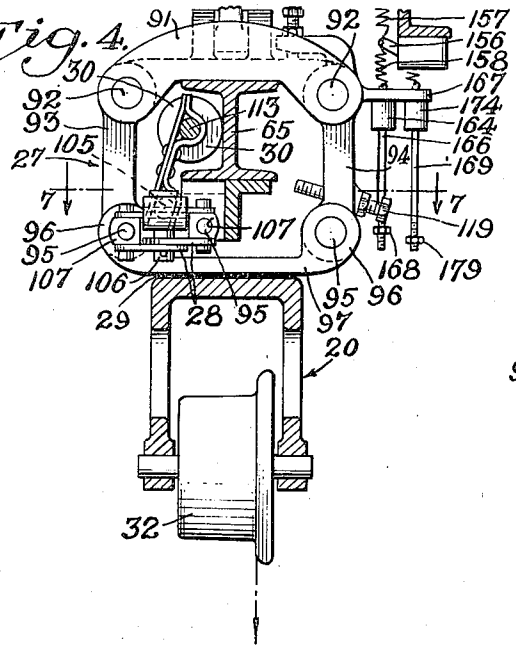

Fig. 5.

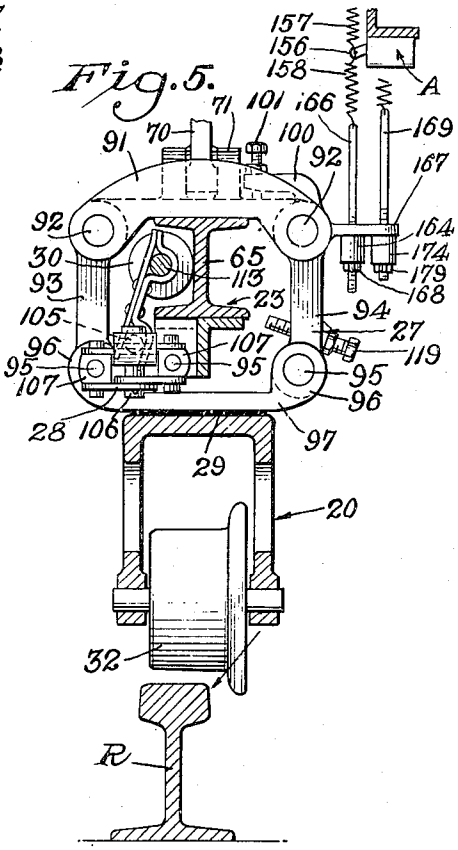

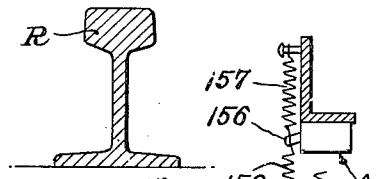

Fig. 6.

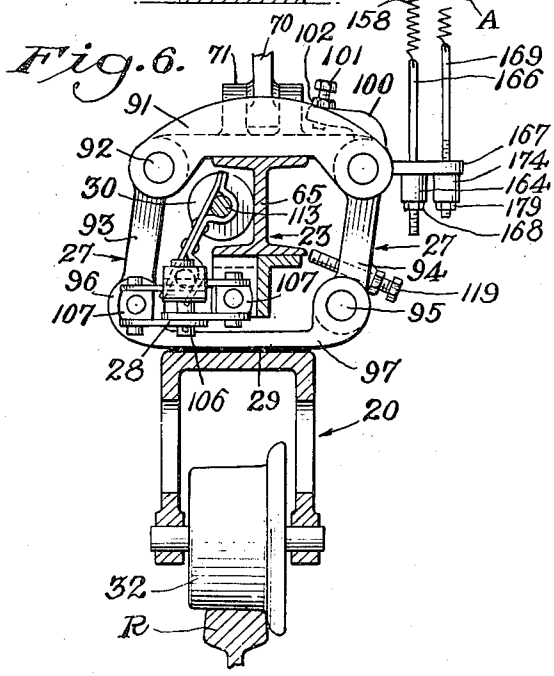

Inventor
Charles G. Kaehms
By
Mann and Brown
Attorneys.

Feb. 15, 1949. C. G. KAEHMS 2,461,984

FLAW DETECTOR MOUNTING AND CONTROL

Filed May 15, 1945 5 Sheets-Sheet 4

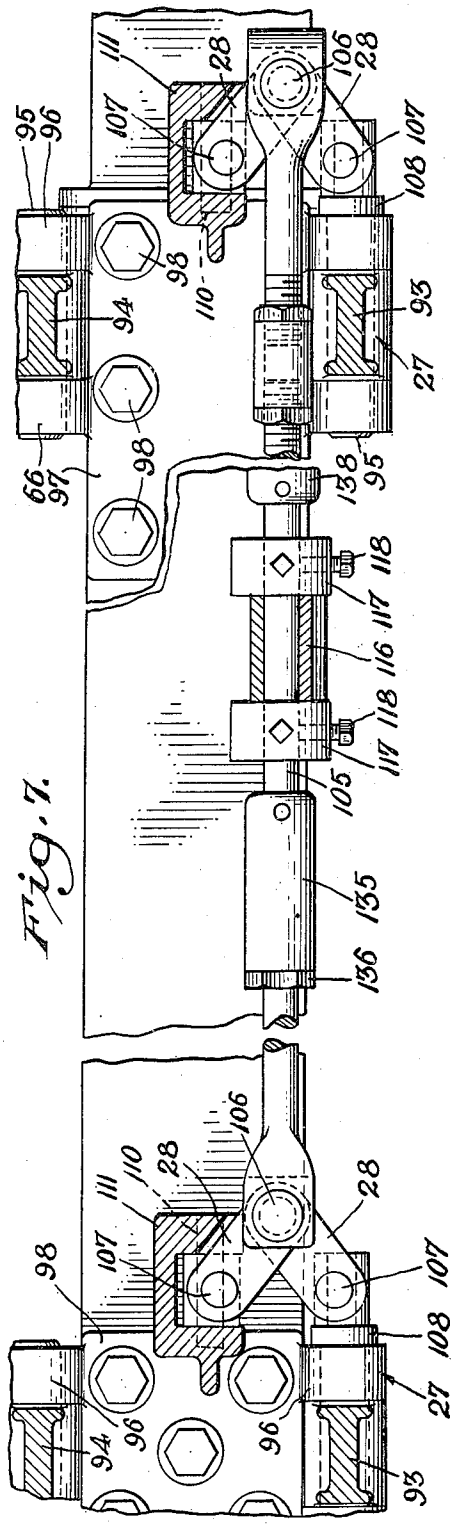

Fig. 7.

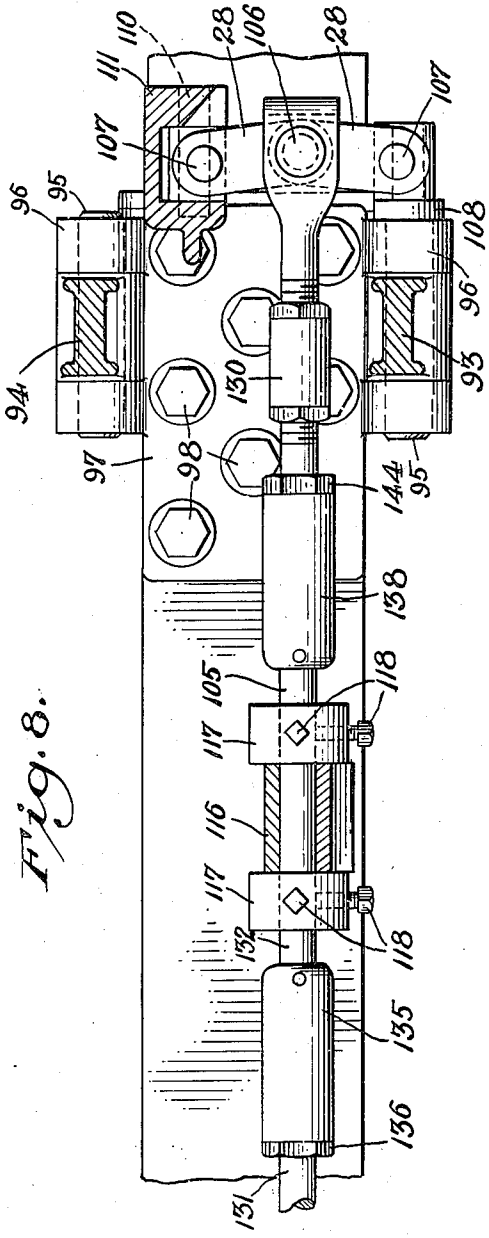

Fig. 8.

Inventor
Charles G. Kaehms
By
Mann and Brown
Attorneys.

Feb. 15, 1949. C. G. KAEHMS 2,461,984

FLAW DETECTOR MOUNTING AND CONTROL

Filed May 15, 1945 5 Sheets-Sheet 5

Fig. 9.

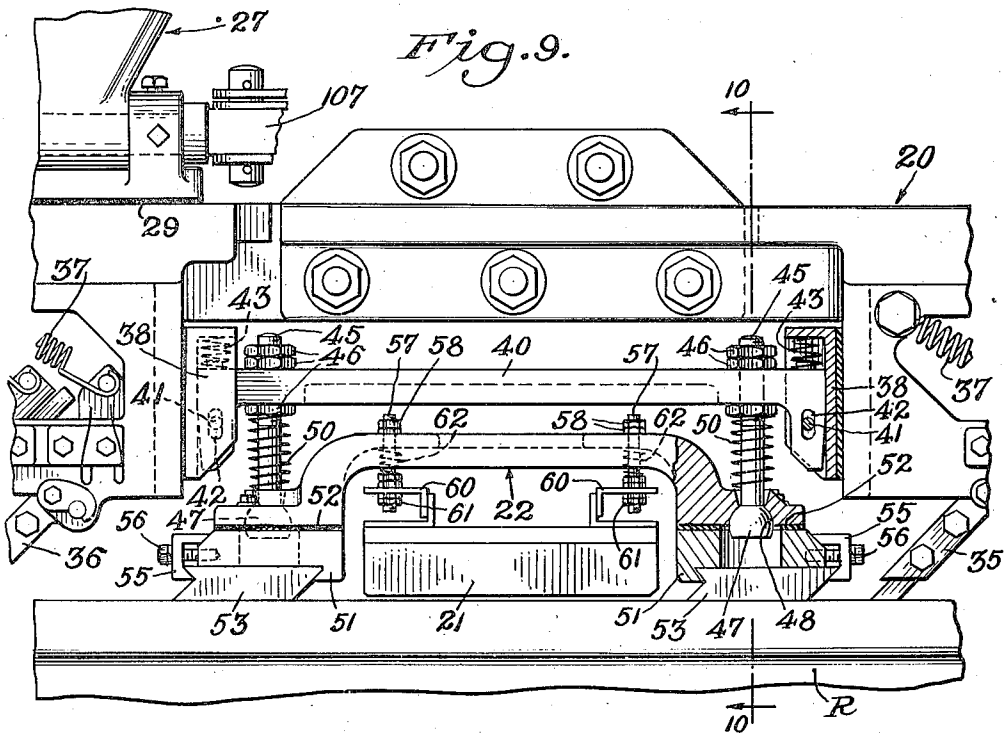

Fig. 10.

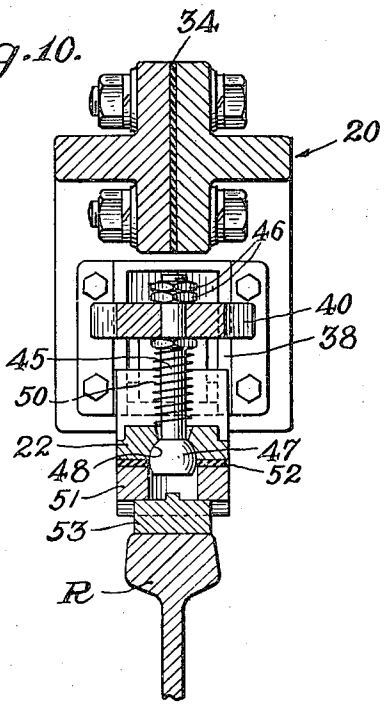

Inventor
Charles G. Kaehms
By
Mannand Brown
Attorneys.

Patented Feb. 15, 1949 2,461,984

UNITED STATES PATENT OFFICE

2,461,984

FLAW DETECTOR MOUNTING AND CONTROL

Charles G. Kaehms, Oakland, Calif., assignor, by mesne assignments, to Southern Pacific Company, a corporation of Delaware

Application May 15, 1945, Serial No. 593,858

18 Claims. (Cl. 175—183)

1

My invention relates to flaw detector apparatus for use on railway tracks and is directed to the means for mounting a detector assembly on a detector car for movement to and from a rail under the car.

The detector assembly consists of a brush carriage having an inductive pickup unit mounted between the front and rear brushes. The carriage is supported on the rail by flanged wheels, and may be raised from the rail when the car is traveling light between test locations. When in use for testing, the carriage rides on the rail with the wheel flanges urged against the gauge edge of the rail to properly align the rail energizer and testing equipment over the rail. Preferably also the brush carriage is urged downwardly against the rail to reduce the constant resistance between the brushes and the rail. While riding on the rail, the carriage must have free lateral and vertical movement relative to the car itself.

One object of my invention is to provide a structurally efficient and reliable mounting for the detector assembly that will permit these various movements on the part of the detector assembly. Another object is to provide such a mounting that will maintain the detector assembly at a desired upright position relative to the top surface of the rail, regardless of the degree of extension of the detector assembly vertically or laterally and regardless of the tilt of the car.

In pressing a detector assembly laterally against the gauge side of the track, it is desirable to exert such lateral pressure at two longitudinally-spaced points on the detector assembly. Another object of my invention is to solve the problem of exerting two-point pressure by a single lateral actuating means in such manner as to permit a slight range of lateral rotation of the detector assembly necessary for following changes in the direction of the rail.

A detector assembly of the present type includes a detector unit having one or more detector coils responsive to magnetic flux adjacent the rail under test, which detector unit is usually mounted on a carriage adapted for guiding contact with the rail. A further object of my invention is to provide for guiding and positioning such a detector unit for efficient response to flaws and at the same time to provide such flexibility as will permit the detector unit to follow minor rail irregularities to a desirable degree.

Further objects of my invention relating to the control and correlation of the various movements of the detector assembly include the following:

To provide a control arrangement that will cause the mounting means to operate in a predetermined cycle involving both downward extension and lateral extension from a retracted

2

position; to provide a single reversible manual control for such cyclic control; to provide automatic correlation of the vertical and lateral components of movement of the detector assembly; to provide automatic correlation of the means for pressing the carriage downward with the means for extending and retracting the carriage; and to provide an efficient electrical system for controlling and correlating the different movements involved.

The above and other objects and advantages of my invention will be apparent in the following detailed description taken with the accompanying drawings.

In the drawings, which are to be regarded as merely illustrative,

Figure 1 is a diagrammatic view showing selected parts of the structure employed in the preferred practice of my invention, together with a wiring diagram of the control system,

Figure 2 is a side elevation of a detector assembly mounted on a detector car as contemplated in the preferred practice of the invention,

Figure 3 is a fragmentary view partly in horizontal section of a portion of the mounting structure, the parts being positioned for normal operating extension of the detector assembly,

Figure 4 is a view partly in transverse vertical section showing the detector assembly in its retracted position, certain parts being omitted for clarification of illustration,

Figure 5 is a similar view showing the detector assembly in its downward movement approaching the rail,

Figure 6 is a similar view of the detector assembly in its normal extended operating position,

Figure 7 is a fragmentary horizontal section on a somewhat enlarged scale taken as indicated by the line 7—7 of Figure 4, showing a transverse shifting mechanism in one position,

Figure 8 is a similar view with the mechanism in a second position,

Figure 9 is a portion of Figure 2 on an enlarged scale with certain portions broken away to reveal concealed structure, and

Figure 10 is a vertical transverse section taken as indicated by the line 10—10 of Figure 9.

General organization

The principal parts of the particular detector assembly shown in Figures 2, 9 and 10 are a brush carriage, generally designated 20, for passing current longitudinally through a portion of the rail R, a detector unit 21 comprising one or more detector coils (not shown) in a box-like housing for response to flaw-derived variations in the magnetic flux created by the longitudinal current, and a detector carriage 22 mounted on

the brush carriage to carry and guide the detector unit.

In the illustrated preferred practice of the invention, the means for movably mounting the detector assembly on the detector car includes a vertically movable support 23 and a vertical actuating or lift mechanism including two lift arms 25 and an actuating air cylinder or lift cylinder 26. The brush carriage 20 is mounted on the vertically movable support 23 by means of a forward parallel linkage and a rearward parallel linkage, generally designated 27, for lateral shift or lateral extension and retraction relative to the support, and such lateral movement is accomplished by forward and rearward pairs of toggle arms 28 (best shown in Figures 7 and 8) controlled by actuating means in the form of an air cylinder 30 on the support 23.

When the detector assembly is in its lowered or extended operating position for testing track, the detector assembly is pressed downwardly against the track by suitable push rods 31 acting under air pressure.

The detector assembly

The brush carriage shown in Figure 2 is of the well-known type having forward and rearward flanged wheels 32 to cooperate with the rail R as guide means, it being contemplated that the flanges of the two wheels will be pressed laterally against the gauge side of the rail. A forward scratch brush 33 is provided to clear and clean the rail surface. Current enters the rail R from a forward set of six brushes 35, passes along the rail longitudinally and leaves the rail through a rearward set of six brushes 36. The various brushes are pivotally mounted on the carriage and are biased toward the rail by suitable biasing springs 37.

In the usual manner, the brush carriage incorporates suitable insulation to isolate the brush carriage electrically and to separate the two sides of the brush circuit. Such insulation, for example is shown at 29 in Figure 9 and at 34 in Figure 10. It may be noted also in Figure 2 that the push rods 31 lead to insulating wooden beams 39.

For the purpose of mounting and guiding the detector carriage 22 for the detector unit 21, the brush carriage has a pair of vertical guides 38 channel-shaped in cross section in which are slidingly mounted the opposite ends of a longitudinal guide beam 40. Fixed pins 41 extend through suitable slots 42 in the ends of the guide beam to limit the relative vertical movement thereof. Preferably suitable springs 43 are enclosed in the vertical guides 38 to press downward on the ends of a guide beam. Two threaded suspension rods 45 are adjustably but rigidly mounted on the guide beam 40 by means of suitable nuts 46 and have ball members 47 formed on their lower ends.

The detector carriage 22 is of arched construction, as best shown in Figure 9, and is provided with suitable sockets 48 for cooperation with the ball members 47. Suitable helical springs 50 surrounding the suspension rods 45 and acting between the guide beam 40 and the detector carriage serve to maintain the ball members 47 in the sockets, these springs being stronger than the springs 43 acting on the ends of the guide beam. At the opposite ends of the detector carriage 22, suitable blocks 51 are mounted thereon by insulating plates 52 and suitable shoes 53 are

replaceably mounted on the blocks 51 in a well-known manner by clamps 55 and bolts 56.

The detector unit 21 is adjustably mounted on the detector carriage 22 by means of threaded suspension rods 57 that extend through the detector carriage and are held thereon by stop nuts 58. The lower ends of the suspension rods 57 are adjustably secured to brackets 60 on the detector unit by means of nuts 61. Preferably, the brackets 60 are slotted to permit longitudinal adjustment of the detector unit relative to the suspension rods 57. The suspension rods 57 are axially movable relative to the detector carriage 22 but are normally pressed to their lowermost positions by suitable springs 62. The springs 62 are intended to be compressed only in emergencies, for example, when a relatively low rail joint causes the detector unit to make contact with the rail.

It is apparent that the described manner of mounting the detector unit 21 on the brush carriage 20 permits the detector unit to rock in a vertical longitudinal plane to follow irregularities in the configuration of the rail R and likewise permits the detector unit to swing for the same purpose on a longitudinal axis determined by the two ball members 47 and their cooperating sockets 48.

Means for raising and lowering the detector assembly

The vertically movable support 23 may be in the form of an I-beam 65 adapted for cooperation with vertical guides 66 at its opposite ends. In the particular construction shown, the vertical guides 66 are channel members rigidly mounted on the under-structure of the detector car and each end of the I-beam 65 is provided with a shoe 67 that slides in the channel of the corresponding vertical guide and a second shoe 68 that slides against the inner face of the vertical guide.

The two previously-mentioned lift arms 25 are connected to corresponding lift links 70 which in turn are pivotally connected to suitable link brackets 71 on the upper surface of the I-beam 65. Each of the lift arms 25 is mounted on and operated by a corresponding shaft 72 that is journaled in suitable bearings 73 on the underframe of the detector car. Each of the two shafts 72 is controlled by a rocker arm 75 extending downwardly therefrom, the two rocker arms being pivotally connected to a horizontal lift rod 76. For the purpose of adjustment, the lift rod 76 may be made in two sections between the two rocker arms 75 and the two sections adjustably interconnected by a turnbuckle 77.

As best shown in Figures 1 and 2, the lift rod 76 is connected to one end of a lever 78 mounted on a pivot 80 and the other end of the lever is connected to a piston rod 81 operated by a piston 82 in the lift cylinder 26.

It should be understood that the brush carriage on each side of the car is controlled by like apparatus, but for convenience the control equipment for one side only will be described.

As shown diagrammatically in Figure 1, compressed air from a supply pipe 83 may be admitted to the lift cylinder 26 through what may be termed a lift valve 85. The lift valve 85 is a three-way valve having one position for placing the lift cylinders under pressure and a second position for releasing compressed air from the lift cylinders to the atmosphere, the second position being shown in Figure 1. A suitable spring 87 urges the operating lever 88 of the lift valve

85 to the release position of the valve and a lift solenoid 90 is operatively connected to the valve lever 88 to move the valve to its pressure position.

Preferably some latching means is provided whereby the vertically movable support 23 may be held in its elevated position independently of air pressure in the lift cylinder 26. By way of example, Figure 1 shows a latch shoulder 79 extending downwardly from the lever 78 for engagement by a cooperating detent 84. The detent 84 is part of a latching mechanism in a housing 89 and is retracted into position to release the latch shoulder 79 when the latch mechanism is energized. When the detent 84 is in its raised or extended position, it is yieldable to permit the latch shoulder 79 to move across it into a latched position.

Means for moving the detector assembly transversely

Each of the previously-mentioned two sets of parallel linkages 27, as best shown in Figures 4, 5 and 6, includes a transverse yoke 91 that is fixedly mounted on the I-beam 65. The two ends of each yoke 91 carry pins 92 on which are mounted parallel links 93 and 94. The lower ends of the parallel links 93 and 94 carry pins 95 that are mounted in suitable bearing sleeves 96 integral with a plate 97, the plate being attached to the top of the brush carriage 20 by a number of cap screws 98. The described parallel linkages 27 are sufficiently loose at the joints to permit the detector assembly to rotate laterally slightly as may be required to conform to a curve in the track.

To limit the lateral movement of the parallel linkage inwardly with respect to the center of the car, at least one of the inner parallel links 94 may be formed with a finger 100 overhanging the corresponding yoke 91 to carry an adjustable stop screw 101 for movement against the yoke. The stop screw may be provided with a suitable locking nut 102.

The previously-mentioned two pairs of toggle arms 28 constitute operating means at spaced points along the vertically movable support 23 and these two operating means are connected to a force-transmitting means in the form of an operating rod 105. To cause the detector assembly to swing laterally on the two sets of parallel linkages 27, it is merely necessary to shift the operating rod 105 from the position shown in Figure 7 to the position indicated in Figure 8, thereby causing the two pairs of toggle arms to spread.

Each of the individual toggle arms 28 comprises a pair of spaced flat links, as shown in Figures 4–6. Each pair of the toggle arms 28 is connected to a suitable pivot pin 106 on the operating rod 105, and, at their outer ends, the toggle arms are pivotally connected to the trunnions of suitable trunnion members 107, each of the trunnions 107 being mounted for pivotal action about an axis perpendicular to the axis of its trunnion connections with the toggle arms.

As indicated in Figure 7, one of the trunnion members 107 associated with each of the pairs of toggle arms may be rotatably mounted on a projecting end of one of the lower pivot pins 95 of the previously-described parallel linkage, the pin being formed with a radial collar 108 in abutment with the adjacent fixed bearing sleeve 96 to take the thrust of the toggle action. The other trunnion member 107 associated with each of the pairs of toggle arms is shown rotatably mounted

on a pin 110 in a special bracket member 111 that is mounted on the underside of the I-beam 65.

The previously-mentioned air cylinder or push-over cylinder 30, as indicated in Figure 3, houses a piston 112 from which a piston rod 113 extends through the end of the cylinder and into sliding engagement with a suitable guide bearing 115. A fork member 116 fixedly attached to the piston rod 113 extends downward to embrace the operating rod 105. The fork is operatively connected to the rod 105 by virtue of a pair of confining collars 117 that are adjustably anchored on the rod by suitable set screws 118. It is apparent that movement of the piston 112 to the left, as viewed in the drawings, will shift the operating rod 105 to the left and thereby expand the toggle arms 28 to cause the detector assembly to be swung laterally outwardly of the car on the two parallel linkages 27. Suitable means may be employed to limit movement of the toggle arms beyond their normal range, for example a stop screw 119 (Figs. 4, 5 and 6) positioned on the parallel linkage to abut the lift beam 65. Preferably, a suitable helical spring 120 is housed in the push-over cylinder 30, as indicated in Figure 3, for the purpose of urging the piston to this leftward position and compressed air is admitted to the cylinder to move the piston to the right when it is desired to retract the detector assembly inward.

Figure 1 shows diagrammatically the arrangement for controlling the admission of air to the push-over cylinder 30. Compressed air in a pipe 121 from the previously-mentioned supply pipe 33 is controlled by a three-way push-over valve 122 which is connected on its outlet side to a pipe 123 leading to the push-over cylinder 30. A suitable spring 126 acting on the lever 127 tends to hold the push-over valve 122 in its release position to permit the spring 120 to control the lateral position of the detector assembly. Whenever a push-over solenoid 128 also connected to the lever 127 is energized, the solenoid swings the lever to a pressure position of the valve admitting compressed air to the push-over cylinder 30 to drive the piston 112 to the right thereby to retract the detector assembly laterally.

For the purpose of adjustment, the operating rod 105 may be made in two sections adjustably interconnected by a turnbuckle 130. The operating rod 105 may also incorporate suitable yielding means which may be placed at various points between the fork member 116 and the connections between the parallel linkages 27 and the brush carriage 20, or at least at a point between the fork member and one of the connections. The purpose of such yielding means is to permit a slight amount of lateral rotation on the part of the brush carriage to follow changes of direction of the rail R. In the absence of some such provision, the rigidity of the brush carriage mounting will permit only one of the two flanged wheels 32 to be pressed against the gauge side of the rail on a curve in the track.

In the present construction, such a desired yielding action may be achieved by breaking the operating rod 105 to form two normally spaced ends 131 and 132, as indicated in Figure 3. The end 131 is formed with a circular head 133 and the end 132 is provided with a cylindrical extension 135 that slidingly houses the circular head 133. A suitable guide and stop bushing 136 is threaded into the end of the cylindrical extension 135 and a spring 137 is housed in the cylindrical extension 135 to urge the circular head 133 toward the bushing 136.

Preferably a second yielding means is provided in the construction of the operating rod 105 on the other side of the fork 116 for yielding action between the fork and the second pair of toggle arms 28. As shown in Figure 3, this second yielding means may likewise comprise a cylindrical extension 138 on an end portion of the operating rod 105 which houses a spring 139. The spring 139 acts between a bushing 144 and a head 149 on a second end portion of the operating rod.

When the detector assembly is in its elevated or retracted position, the two springs 137 and 139 in Figure 3 are at their positions of maximum confined length. The two springs are pre-loaded or confined at substantially less than their free lengths. When the detector assembly is moved laterally toward the rail by the push-over spring 120, the two springs 137 and 139 yield after the wheels 32 of the brush carriage contact the gauge side of the rail and, in the normal extended position of the detector assembly, the two springs 137 and 139 are normally partially compressed, as shown in Figure 3. When the detector assembly is traversing a curve, the detector assembly will rotate laterally to a slight extent as required to conform with the changing curvature of the rail and, of course, one of the springs 137 or 139 will correspondingly be compressed to greater than normal degree while the other spring will expand from its normal length. To provide the required action, the two springs 137 and 139 must, of course, be somewhat weaker than the push-over spring 120 since the push-over spring normally overcomes both of the springs 137 and 139.

The hold-down means

The previously-mentioned downwardly-extending push rods 31 are connected to pistons (not shown) in corresponding hold-down cylinders 140 and at their lower ends are fixedly seated in suitable anchoring members 141 mounted on the opposite ends of the brush carriage 20. The hold-down cylinders 140 are formed with ears 142 at their upper ends to receive pivot pins 143 by means of which the cylinders are pivotally mounted on fixed brackets 145.

A suitable hold-down valve 146 of the three-way type heretofore described receives compressed air from the supply pipe 33 and delivers the air to a pipe 147 leading to the two hold-down cylinders 140 which are connected to opposite ends of the brush carriage. A spring 150 acting on the valve lever 151 urges the valve to its release position to permit freedom of movement of the push rods 31 while a hold-down solenoid 152 is connected to the valve lever to move the valve to its pressure position for admitting compressed air to the hold-down cylinder 140.

The electrical control system

The desired cycle of operation may be understood from Figures 4, 5 and 6, showing successive positions of the brush carriage in moving from its vertically and laterally retracted position into normal operating position in contact with the rail R. Figure 4 shows the retracted position at which the vertically movable support 23 is held elevated either by engagement of the latch shoulder 79 with the detent 84 or by air pressure in the lift cylinder 26. In the position shown in Figure 4, air pressure in the push-over cylinder 30 causes the piston 112 in the push-over cylinder to compress the spring 120, the two pairs of toggle arms 28 being in their contracted positions.

To initiate the cycle of operation, the vertically movable support 23 is released to gravitate downwardly toward the position shown in Figure 5. Such release may be made by disengaging the detent 84 from the latching shoulder 79, but in normal operation is accomplished by energizing the lift solenoid 90 to release air from the lift cylinder 26. As the detector assembly approaches the position shown in Figure 5 in its downward movement, the push-over means acts to shift the brush carriage outward so that as the flanged wheels 32 make contact with the rail, as indicated in Figure 5, the push-over means is effective to continuously urge the flanges of the two wheels against the gauge side of the rail. This action on the part of the push-over mechanism is accomplished by deenergizing the push-over solenoid 128 to release air from the push-over cylinder 30 thereby to permit the spring 120 in the cylinder to actuate the operating rod 105 for the two pairs of toggle arms 28.

In the preferred form of my control system, two switches operate in response to the vertical movement represented by Figures 4 and 5. One of these switches is a switch A shown diagrammatically in Figure 1 as comprising a fixed contact 153 and a switch arm 156. The switch is biased to its closed position by an upper spring 157 and is opened by downward movement of a substantially stronger spring 158, the lower spring being adapted for downward movement by the vertically movable support 23 at a suitable point. A second switch B, shown diagrammatically in Figure 1, has a fixed contact 160 and a switch arm 162. This second switch is biased to open position by an upper spring 163 connected to the switch arm 162 and may be closed in opposition to the upper spring by a stronger lower spring 165 that is likewise operated by downward movement of the support 23.

Figures 4 and 5 show, for example, how switch A may be adapted for operation in response to downward movement of the support 23. The previously-mentioned lower spring 158 for operating the switch A is connected to the upper end of a rod 166 that extends loosely through a guide sleeve 164 on a flange 167 extending laterally from the vertically movable support 23. In the particular construction shown in Figures 4, 5 and 6, the flange 167 is integral with one of the yokes 91 of the parallel linkage. Adjustably mounted on the lower end of the rod 166 below the flange 167 is a nut 168 for abutment against the underside of the guide sleeve 164 to operate the switch A in opposition to the biasing spring 157. At the desired point in the downward movement of the vertically movable support 23, the abutment of the nut against the guide sleeve 164 draws the lower spring 158 downward to operate the switch A. Normally, the lower spring 158 does not yield to any significant extent but may do so whenever the detector assembly descends to an abnormal extent because it misses the rail.

The switch B may be operated by a similar structural arrangement but, preferably, switch B closes later in the downward movement than the opening of switch A, so that the brush carriage will be biased against the gauge side of the rail before the push-down means becomes effective. Thus, Figures 4–6 show a rod 169 in a guide sleeve 174 for operating switch B, the rod 169 having a nut 179 at a lower level than the nut 168 on the rod 166.

The wiring diagram in Figure 1 includes, besides switches A and B, a switch 170 for energizing or deenergizing the whole system, a two-blade main control switch or lift switch 171 inside the car, an auxiliary switch C accessible outside the car, a latch switch 172 and a relay having a relay coil 173 and two relay arms 175 and 176. The relay arm 175 of the relay cooperates with a fixed contact 177 for electrically locking the relay independently of the lift switch 171. When the relay is energized, the relay arm 176 is held against a contact 178 for energization of the push-over solenoid 128. When the relay is deenergized, the relay arm 176 drops against a second contact 189 in a circuit for energizing the hold-down solenoid 152.

The control system is energized by two leads 181 and 182 from a suitable source such as a generator 183, the lead 182 being controlled by the previously-mentioned switch 170. The two blades of the lift switch 171 are connected to the lead 182 by a wire 185, the wire 185 being broken by the switch C. One of the blades of the lift switch 171 moves against a contact that is connected by a wire 186 both to the relay coil 173 and the fixed contact 177 while the other blade of the lift switch moves against a contact from which a wire 187 leads to the previously-mentioned auxiliary switch C. The closing of the lift switch 171 completes the following lift circuit for energizing the lift solenoid: lead 181, lift solenoid 90, wire 188, wire 187, one blade of lift switch 171, wire 185 and auxiliary switch C to the second lead 182. In the closing of the lift switch 171, the second blade completes the following circuit to energize the relay coil 173: lead 181, wire 190, relay coil 173, wire 186, lift switch 171, wire 185 and switch C to the second lead 182.

If the lift switch 171 is closed while the switch A is closed, that is to say, if the lift switch is closed while the detector assembly is elevated above the relatively low position for opening the switch A, the energization of the relay coil 173 will establish a circuit to lock the relay in its energized position independently of the lift switch 171. The locking circuit may be traced as follows: lead 181, wire 190, relay coil 173, wire 186, contact 177, relay arm 175, wire 191, arm 156 of switch A, fixed contact 153 and a wire 192 to the second lead 182.

Whenever the relay coil 173 is energized either by the previously-described lift circuit through the lift switch 171 or by the described locking circuit, the following push-over circuit is completed: lead 181, wire 184, push-over solenoid 128, wire 195, contact 178, relay arm 176 and wire 192 to the second lead 182.

When the relay coil 173 is deenergized while the switch B is closed, that is to say, whenever the lift switch 171 is open while the detector assembly is at a relatively low level to hold the switch B closed, the following hold-down circuit is established: wire 181, wire 196, hold-down solenoid 152, wire 197, switch arm 162 of switch B, fixed contact 160, wire 198, contact 189, relay arm 176, wire 200 and wire 192 to the second lead 182.

It will be noted that the circuit for controlling the lateral actuating means, i. e., the push-over circuit for causing pressure to be built up in the push-over cylinder 30 has, in effect, two control switches, a first control switch being the relay arm 175 and a second control switch being the switch A, and that the function of the latter control switch A is to cause the carriage to remain laterally retracted independently of the position of the main control switch when the carriage is elevated. It will also be noted that the circuit for controlling the actuating means to press the detector assembly downward against the top of the rail, i. e., the push-down circuit has, in effect, two control switches, one control switch being the relay arm 176 and the other being the control switch B. The function of the control switch B is to cause the push-down means to remain ineffective when the detector assembly is at elevated positions.

The latch circuit which when energized retracts the detent 84 to an ineffective position includes a wire 189 from the lead 181 to the detent mechanism, a wire 193 from the detent mechanism to the latch switch 172 and a wire 194 from the switch 172 to the second lead 182.

Operation

Normally the switch 170 for controlling the energization of the system as a whole is closed and the latch switch 172 is closed to keep the latching detent 84 in retracted ineffective position. Normally when the detector assembly is in its retracted or elevated position, the lift switch 171 is closed to hold the vertical support 23 elevated without need for the latch detent 84. Since this switch 171 is closed at such time, the relay coil 173 is energized and therefore the push-over circuit is energized to maintain the push-over cylinder 30 under air pressure to hold the detector assembly laterally retracted. The hold-down circuit is not energized because the relay arm 176 is held in its upper position by the energized relay coil 173. Since the detector assembly is elevated, the switch A is closed to complete the locking circuit at this time and the switch B is open.

To cause the cycle of operation for lowering the detector assembly in the manner indicated by Figures 4–6, it is necessary merely to open the lift switch 171. The opening of the lift switch does not deenergize the relay coil 173 because the switch A is closed to maintain the locking circuit through the relay coil. Since the relay coil remains energized, the opening of the lift switch 171 does not permit the relay arm 176 to close the hold-down circuit. The opening of the lift switch 171 does, however, deenergize the lift solenoid 90, whereupon the spring 87 moves the lift valve 85 to its release position permitting air to escape from the lift cylinder 26. The release of air from the lift cylinder permits the vertically movable support 23 to gravitate downwardly.

The downward movement of the detector assembly by gravity eventually causes switch A to be opened mechanically to break the locking circuit, thereby causing the relay coil 173 to be deenergized. The deenergization of the relay coil causes relay arm 176 to drop, thereby opening the push-over circuit to deenergize the push-over relay 128. Upon deenergization of this relay, the push-over valve 122 moves to its release position permitting air to escape from the push-over cylinder 30 and permitting the spring 120 in the push-over cylinder to actuate the toggle arms 28 for shifting the detector assembly outwardly.

The continued lowering of the detector assembly is along an inclined path, as indicated by the arrow in Figure 5, because of the toggle action. As the detector assembly approaches actual contact with the rail R in this final lowering movement, switch B is mechanically closed to complete the hold-down circuit, whereupon the hold-down solenoid 152 is energized to shift the hold-down valve 146 to its pressure position. The admission

of compressed air to the hold-down cylinders 140 causes the detector assembly to be pressed downward against the top surface of the rail. The various moving parts of the structure and of the electrical system are then positioned as indicated in Figure 1.

The reverse cycle of operation for retracting the detector assembly upwardly and laterally is initiated by simply closing the lift switch 171. The closing of the lift switch completes the lift circuit to energize the lift solenoid 90, whereupon compressed air is admitted to the lift cylinder 22 to move the support means 23 upward. The closing of the lift switch 171 also energizes the relay coil 173 thereby to lift the relay arm 176 to open the hold-down circuit so that air may be released from the hold-down cylinders 140.

The lifting of the relay arm 176 closes the push-over circuit to energize the push-over solenoid 128. The consequent shifting of the push-over valve 122 to its pressure position causes air to enter the push-over cylinder 30 to overcome the spring 120 and reverse the toggle action to draw the detector assembly laterally inward on the parallel linkages.

The upward movement of the detector assembly first causes switch B to open and then causes switch A to close. The opening of switch B prevents subsequent energization of the hold-down circuit while the detector assembly is elevated. The closing of the switch A completes the locking circuit although the locking circuit is not required during this reverse cycle of operation. The fact that the push-over cylinder is normally under pressure when the detector assembly is elevated, thereby holding the detector assembly retracted laterally inward in opposition to the push-over spring 120, is of advantage because, in the first place, necessity for retracting the detector assembly laterally during the lowering movement is unnecessary, and, because, in the second place, the air pressure against the push-over piston tends to keep the various elements of the push-over mechanism from rattling while the detector car is traveling at relatively high speed to or from a test location.

An operator on the outside of a detector car may cause lowering of the detector assembly from its normal retracted position by opening switch C. If the detector assembly is held in elevated position by the detent 84, the latch switch 172 being open, the operator may release the detector assembly for downward movement by momentarily closing the lift circuit to take latching pressure off the detent member, then closing the latch switch 172 to retract the detent member and finally reopening the lift switch 171.

It is important to note that since the support means 23 is rigidly guided in its up and down movement on a straight-line path, and, since the detector assembly is mounted on the support 23 by parallel linkages, the detector assembly will be maintained at a constant angle relative to the car bottom at all positions of the detector assembly. This constant position is substantially perpendicular to the car bottom, and, since the car bottom is substantially parallel to the plane of the track under the car, the arrangement insures that the detector asesmbly will be at a position to rest squarely on the corresponding rail, regardless of the degree to which the car may be tilted by banking of the track.

My detailed description of a preferred embodiment of the invention for the purpose of disclosure and to illustrate the principles involved will suggest to those skilled in the art various changes and substitutions under my basic concept, and I reserve the right to all such departures from my description that lie within the scope of the appended claims.

I claim:

1. In a flaw detector car, a carriage adapted to travel along the rail under the car, a support for said carriage, means to raise and lower said support relative to the car, means including a parallel linkage suspending said carriage from said support for lateral movement of the carriage relative to the support while maintaining the carriage at a substantially constant angle relative to the plane of the car bottom, and means to move said carriage laterally relative to said support.

2. In a flaw detector car, a carriage adapted to travel along a rail under the car, a support under said car, means to raise and lower said support along a straight line path, means including a parallel linkage suspending said carriage from said support for lateral movement of the carriage while maintaining the carriage at a substantially constant angle relative to the plane of the car bottom, and means mounted on said support to act between the support and the carriage for causing lateral movement of the carriage.

3. In a flaw detector car, a carriage adapted to travel along a rail under the car in contact with the gauge side of the rail, means including a parallel linkage for mounting said carriage on the car for movement of the carriage transversely of the car to and from said rail, and actuating means including a toggle linkage to move said carriage on said parallel linkage and to press the carriage toward said gauge side of the rail.

4. In a detector car, a carriage adapted to travel along a rail under the car in contact with the gauge side of the rail, means mounting said carriage on the car with freedom for both vertical movement and transverse movement, means to raise and lower said carriage, and means including a toggle linkage to move the carriage laterally while the carriage is being raised and lowered and to press the carriage against said rail.

5. In a detector car, a carriage adapted to travel along a rail under the car, a forward guide means and a rearward guide means on said carriage for contact with the gauge side of the rail, means to raise and lower said carriage, a forward operating means and a rearward operating means connected with said carriage at longitudinally spaced points to move the carriage laterally toward and away from said rail and to press said two guide means against the rail, actuating means, means connecting said actuating means with said two operating means to apply force thereto, and yielding means effective between said actuating means and at least one of said spaced points on the carriage to yieldingly transmit force to the carriage thereby permitting relative lateral movement of said two guide means to keep both guide means in contact with the gauge side of the rail on a curve.

6. In a detector car, a carriage adapted to travel along a rail under the car, a forward guide means and a rearward guide means on said carriage for contact with the gauge side of the rail, means to raise and lower said carriage, a forward operating means and a rearward operating means connected with said carriage at longitudinally spaced points to move the carriage laterally toward and away from said rail and to press said two guide means against the rail, force-

transmitting means interconnecting said two operating means, and actuating means connected to said force-transmitting means at a point of connection thereon to apply force thereto, said transmitting means being longitudinally yieldable between said point of connection and at least one of said operating means thereby permitting relative lateral movement of said two guide means to keep both the guide means in contact with the gauge side of the rail on a curve.

7. In a detector car, a carriage adapted to travel along a rail under the car, a forward guide means and a rearward guide means on said carriage for contact with the gauge side of the rail, means to raise and lower said carriage, parallel linkage connected to the carriage for lateral movement of the carriage with the carriage at a constant angle relative to the plane of the car bottom, a forward operating means and a rearward operating means connected with said carriage at longitudinally spaced points to move the carriage laterally toward and away from said rail and to press said two guide means against the rail, force-transmitting means interconnecting said two operating means, and actuating means connected to said force-transmitting means at a point of connection thereon to apply force thereto, said transmitting means being longitudinally yieldable between said point of connection and at least one of said operating means thereby permitting relative lateral movement of said two guide means to keep both the guide means in contact with the gauge side of the rail on a curve.

8. In a flaw detector car, a carriage adapted to travel along a rail under the car, a forward guide means and a rearward guide means on said carriage for contact with the gauge side of the rail, a support for said carriage, means to raise and lower said support relative to the car, means including a forward parallel linkage and a rearward parallel linkage suspending said carriage from said support for lateral movement of the carriage relative to the support with maintenance of the carriage at a substantially constant angle relative to the plane of the car bottom, a forward operating means and a rearward operating means on said support connected with said carriage at longitudinally spaced points to move the carriage laterally toward and away from said rail and to press said two guide means against the rail, force-transmitting means interconnecting said two operating means, and actuating means on said support connected to said force-transmitting means at a point of connection thereon to apply force thereto, said transmitting means being longitudinally yieldable between said point of connection and at least one of said operating means thereby permitting relative lateral movement of said two guide means to keep both the guide means in contact with the gauge side of the rail on a curve.

9. In a flaw detector car, a carriage adapted to travel along a rail under the car with a part thereof in abutment with the gauge side of the rail, a support for said carriage, means mounting said support on the car for raising and lowering of the support while maintaining the support at a substantially constant orientation relative to the car, means acting between the car and said support to raise and lower the support, means mounting said carriage on said support for lateral movement of the carriage while maintaining the carriage at a substantially constant angle relative to the support, and means acting between said support and carriage to move the carriage laterally to and from said rail on the last-mentioned mounting means and to press the carriage against the gauge side of the rail.

10. In a flaw detector car, a carriage adapted to travel along a rail under the car with a part thereof in abutment with the gauge side of the rail, a support for said carriage, means mounting said support on the car for raising and lowering of the support while maintaining the support at a substantially constant orientation relative to the car, a first means acting between the car and said support to raise and lower the support, means mounting said carriage on said support for lateral movement of the carriage while maintaining the carriage at a substantially constant angle relative to the support, a second means acting between said support and carriage to move the carriage laterally to and from said rail and to press the carriage against the gauge side of the rail, and a third means acting between the car and the carriage to press the carriage downward against the top of the rail.

11. In a flaw detector car, a carriage adapted to travel along a rail under the car with a part thereof in abutment with the gauge side of the rail, a support for said carriage, means mounting said support on the car for raising and lowering of the support while maintaining the support at a substantially constant orientation relative to the car, a first means acting between the car and said support to raise and lower the support, means mounting said carriage on said support for lateral movement of the carriage while maintaining the carriage at a substantially constant angle relative to the support, a second means acting between said support and carriage to move the carriage laterally to and from said rail and to press the carriage against the gauge side of the rail, a third means acting between the car and the carriage to press the carriage downward against the top of the rail, and means to control and correlate said first, second and third means for a cycle of operation whereby said third means may act only when said support is lowered.

12. In a flaw detector car, a carriage adapted to travel along a rail under the car with a portion of the carriage in abutment with the gauge side of the rail, means mounting said carriage for up and down and lateral movement relative to the car, actuating means to raise and lower the carriage, a circuit for controlling said actuating means, a main control switch in said circuit movable between a first position for raising the carriage and a second position for lowering the carriage, a lateral actuating means to move the carriage laterally toward and way from the rail, a circuit means for controlling said lateral actuating means, a first control switch in said circuit means to cause the carriage to retract laterally in response to movement of said main control switch to said first position, and a second control switch in circuit means to cause the carriage to remain laterally retracted independently of the position of said main control switch when the carriage is elevated.

13. In a flaw detector car, a carriage adapted to travel along a rail under the car with a portion of the carriage in abutment with the gauge side of the rail, means mounting said carriage for up and down and lateral movement relative to the car, actuating means to raise and lower the carriage, a circuit for controlling said actuating means, a main control switch in said circuit movable between a first position for raising the

carriage and a second position for lowering the carriage, a lateral actuating means to extend and retract the carriage laterally toward and away from the rail, circuit means for controlling said lateral actuating means, a first control switch in said circuit means to take a position for lateral retraction of the carriage in response to movement of said main control switch to said first position and to take a position for lateral retraction of the carriage in response to movement of said main control switch to said second position, and a second control switch in said circuit means to cause the carriage to remain laterally retracted independently of the position of said main control switch when the carriage is elevated.

14. In a flaw detector car, a carriage adapted to travel along a rail under the car with a portion of the carriage in abutment with the gauge side of the rail, means mounting said carriage for up and down movement relative to the car, actuating means to raise and lower the carriage, a circuit for controlling said actuating means, a main control switch in said circuit movable between a first position for raising the carriage and a second position for lowering the carriage, an actuating means to press the carriage downward against the top of the rail, a circuit for controlling said pressure-actuating means, a control switch in said latter circuit to cause said pressure-actuating means to become ineffective in response to movement of said main control switch to said first position, and a second control switch in said second circuit to cause said pressure-actuating means to remain ineffective independently of the position of said main control switch when said carriage is elevated.

15. In a flaw detector car, a carriage adapted to travel along a rail under the car with a portion of the carriage in abutment with the gauge side of the rail, means mounting said carriage for up and down movement relative to the car, actuating means to raise and lower the carriage, a circuit for controlling said actuating means, a main control switch in said circuit movable between a first position for raising the carriage and a second position for lowering the carriage, a pressure means to press the carriage downward against the top of the rail, a circuit for controlling said pressure means, a control switch for said latter circuit to take a position in response to movement of said main control switch to said first position to cause said pressure means to be ineffective and to take a position in response to movement of said main control switch to said second position to cause said pressure means to be effective, and a control switch for said latter circuit to cause said pressure means to remain ineffective independently of the position of said main control switch when the carriage is elevated.

16. In a flaw detector car, a carriage adapted to travel along a rail under the car with a portion of the carriage in abutment with the gauge side of the rail, means mounting said carriage for up and down and lateral movement relative to the car, actuating means to raise and lower the carriage, a circuit for controlling said actuating means, a main control switch in said circuit movable between a first position for raising the carriage and a second position for lowering the carriage, a lateral actuating means to move the carriage laterally toward and away from the rail, a circuit for controlling said lateral actuating means, a control switch in said latter circuit movable to two positions, one position for causing the carriage to be laterally retracted and the other position for causing the carriage to be laterally extended, means to make said second-mentioned control switch responsive to said main control switch whereby the second-mentioned switch moves to said one position in response to movement of the main control switch to its first position, and means to make said second-mentioned switch non-responsive to said main control switch whenever the carriage is substantially fully elevated.

17. In a flaw detector car, a carriage adapted to travel along a rail under the car with a portion of the carriage in abutment with the gauge side of the rail, means mounting said carriage for up and down movement relative to the car, actuating means to raise and lower the carriage, a circuit for controlling said actuating means, a main control switch in said circuit movable between a first position for raising the carriage and a second position for lowering the carriage, an actuating means to press the carriage downward against the top of the rail, circuit means for controlling said pressure actuating means, a first control switch in said circuit means responsive to said main control switch to cause deenergization of said pressure actuating means when said main control switch is moved to said first position, and a second control switch in said circuit means in series with said first control switch adapted to open in response to upward movement of the carriage thereby to make said pressure actuating means non-responsive to the main control switch when the carriage is fully elevated.

18. In a flaw detector car, a carriage adapted to travel along a rail under the car with a portion of the carriage in abutment with the gauge side of the rail, means mounting said carriage for up and down movement relative to the car, actuating means to raise and lower the carriage, a circuit for controlling said actuating means, a main switch in said circuit movable between a first position for raising the carriage and a second position for lowering the carriage, a second actuating means to press the lowered carriage downward against the top of the rail, a second circuit for controlling said second actuating means, a control switch in said second circuit movable to two positions, one position for energization of the second actuating means and the other position for deenergization of the second actuating means, means to make said second-mentioned control switch responsive to said main control switch to cause deenergization of said second actuating means when said main control switch is moved to its first position, and means responsive to upward movement of the carriage to make said second control switch non-responsive to said main control switch when the carriage is elevated.

CHARLES G. KAEHMS.

REFERENCES CITED

The following references are of record in the file of this patent:

UNITED STATES PATENTS

Number	Name	Date
1,052,268	Nicholson	Feb. 4, 1913
2,095,911	Billstein et al.	Oct. 12, 1937
2,135,050	Perry	Nov. 1, 1938
2,250,460	Barnes et al.	July 29, 1941
2,276,011	Billstein	Mar. 10, 1942
2,388,683	Frickey et al.	Nov. 13, 1945