W. W. DEAN.

SWITCH.

APPLICATION FILED NOV. 7, 1913.

1,266,420. Patented May 14, 1918.

Fig. 1.

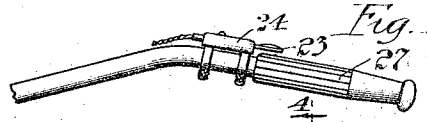

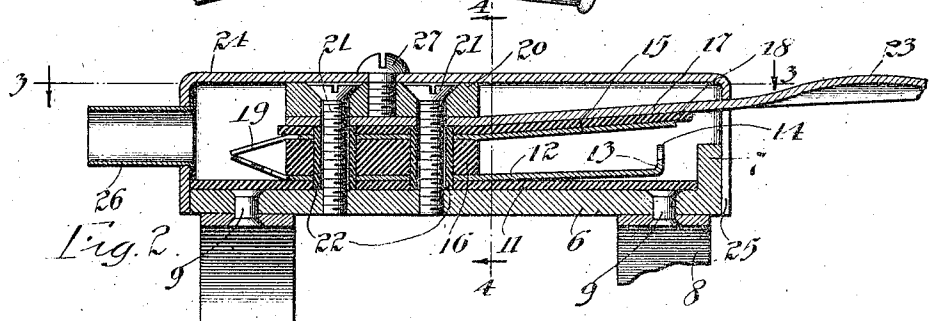

Fig. 2.

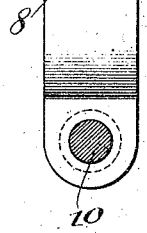

Fig. 3.

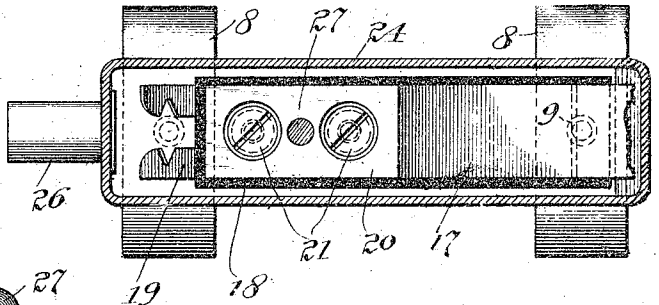

Fig. 4.

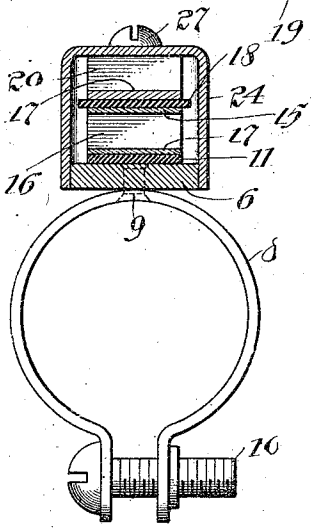

Fig. 5.

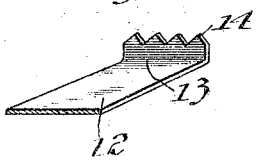

Witnesses:
Robert H. Weir
W. Perry Hahn

Inventor:
William W. Dean
by Jones, Addington, Ames & Seibold
Attys.

UNITED STATES PATENT OFFICE.

WILLIAM W. DEAN, OF CHICAGO, ILLINOIS, ASSIGNOR, BY MESNE ASSIGNMENTS, TO BENJAMIN ELECTRIC MANUFACTURING COMPANY, OF CHICAGO, ILLINOIS, A CORPORATION OF ILLINOIS.

SWITCH.

1,266,420. Specification of Letters Patent. Patented May 14, 1918.

Application filed November 7, 1913. Serial No. 799,808.

To all whom it may concern:

Be it known that I, WILLIAM W. DEAN, a citizen of the United States, residing at Chicago, in the county of Cook and State of Illinois, have invented new and useful Improvements in Switches, of which the following is a full, clear, concise, and exact description, reference being had to the accompanying drawing, forming a part of this specification.

My invention relates to improvements in switches particularly adapted for controlling the circuits of electric horns or alarms for motorcycles, cycle cars and the like. These switches are commonly mounted on the handle bars of the motorcycle and as ordinarily constructed comprise a push-button mounted on a base of considerable size, and due to the size of this base it has been practically impossible to get the button sufficiently near or close to the hand-hold of the handle bars to enable the operator to push the button and at the same time retain a natural and firm grip on the hand-hold. Due to the fact that not only is the steering of a motorcycle done from the handle bars but the engine controlled therefrom, it is necessary, in order to avoid dangerous accidents, that a switch be provided which may be readily operated without the necessity of releasing the firm grip on the hand-hold.

One of the objects of my invention is to provide a switch mechanism the operating member of which will project over the hand-hold of the handle bar and lie in a position to be depressed by a natural movement of the driver's thumb, without the necessity of the driver releasing his grip. As a consequence, the alarm may be given naturally and without in any way affecting the usual and natural steering and control of the motorcycle.

For the purpose of disclosing my invention I have illustrated in the accompanying drawings one preferred embodiment thereof. In said drawings—

Figure 1 is a side elevation of a portion of the handle bar of a motorcycle showing my switch attached;

Fig. 2 is a longitudinal sectional view of my switch showing the details of construction thereof;

Fig. 3 is a sectional view taken on the line 3—3 of Fig. 1;

Fig. 4 is a sectional view taken on the line 4—4 of Fig. 1; and,

Fig. 5 is a detail of one of the contacts of the switch.

In the embodiment illustrated, I provide a base 6, which is preferably formed of brass, nickel-plated if desired, or any other suitable material having its front end turned up, as at 7, and having secured on the bottom thereof a pair of clamping straps 8. These straps are preferably secured to the base by rivets 9 passing through the base and the top of the straps, and the lower free ends of the straps are adapted to be drawn together by means of suitable screws 10. These straps surround one of the handle bars of the motorcycle and securely clamp the switch in position. Mounted on the upper side of the base 6 is an insulating plate 11, which may be formed of white-horn fiber or any other suitable material, and lying on this insulating material is a contact spring 12. This spring consists of a flat strip of material sprung up at its forward end and having its forward end turned up, as at 13, which end is preferably serrated at its edge to form suitable contact points 14. Lying above the contact spring 12 is a second contact spring 15, which is separated from the spring 12 by a suitable spacer member 16 of white-horn fiber or other suitable material. The forward end of this spring is sprung up so as to be clearly separated from the contacts 14 and is adapted to be moved into engagement with the contacts by a spring arm 17 suitably separated and insulated from the spring 15 by a strip of insulating fiber 18. It will be noted that the end of the spring 15 and the end of the strip 18 fall short of the upturned projection 7 of the base, so that when the spring arm 17 is depressed, even though it moves into engagement with the projection 7 on the base, the contact spring 15 will make engagement with the contacts 14. The rear ends of the contact springs 12 and 15 are each provided with rearwardly extending ears 19 having suitable notches therein in which the conducting wires may be looped and secured. The springs, spacer members and depresser arm 17 are all clamped in position upon the base by means of a brass clamping plate 20 which is secured over the top of the rear end of the spring arm 17 and secured in position

by means of suitable screws 21 which pass down through the various members heretofore described and engage in the base 6. The various members are provided with openings through which the screws pass, and these screws are surrounded by insulating bushings 22 which thoroughly insulate the same from the springs 12 and 15. The arm 17 is provided with a laterally extending projection or thumb piece 23 and the switch parts are inclosed by a suitable sheet metal or drawn brass cover 24 which fits over and extends down on each side of the base, being provided at its forward end with a slot 25 through which the extension 23 of the arm 17 may project, and being provided at its rear end with a tubular extension 26 through which pass the conductor wires. This cover is held in position by a single screw 27 which passes through the same and into the clamping plate 20. It will be noted that this cover forms a single unitary piece slotted at its front end to permit its being inserted in position, and after being placed in position it is held in position by a single screw. It completely covers the operating parts of the switch, and due to the upturned extension 7 on the base 6 its forward slot is closed except for a slight portion necessary to permit the movement up and down of the arm 17.

The switch thus formed is clamped on the handle bar of the motorcycle and the thumb piece 23 is raised sufficiently high so that it will clear the hand-hold 27. There is sufficient clearance between the thumb piece and the grip so that the thumb piece may be readily depressed for closing the circuit. By the above construction I provide a switch for controlling the circuit of the horn or signal which is provided with a laterally projecting handle or thumb piece lying above the hand grip of the steering device and in a position to be readily operated by the thumb of the operator without releasing his hold upon the hand grip.

Having thus described my invention, what I claim as new and desire to secure by Letters Patent, is:—

A switch for mounting upon the handle bars of a motorcycle comprising an elongated base, a pair of clamping members secured to said base for securing the base in position upon the handle bar, a contact spring mounted upon and insulated from said base having its free end upturned to form a contact, an insulating spacing member mounted at the rear end of said spring, a second contact spring mounted upon said insulating spacing member and having its free end adapted to engage the contacts of said first contact spring, a spring arm also mounted upon said spacing member above said second spring and adapted to depress the free end of said spring for closing the contacts, an insulating strip between said spring arm and the movable spring contact, a clamping member above the rear end of said spring arm, screws passing through said clamping member, through said spring arm springs and spacing member and adapted to engage in said base for securing the parts together, and a casing inclosing the parts of the switch having its sides embracing the sides of the base and secured in position by a screw passing therethrough and into said clamping plate, said spring arm having an operating handle projecting longitudinally beyond said casing.

In witness whereof, I have hereunto subscribed my name in the presence of two witnesses.

WILLIAM W. DEAN.

Witnesses:
W. PERRY HAHN,
ANNE SOLOMON.