Aug. 1, 1961 W. H. HAY 2,994,799

PROJECTION LAMP

Filed Dec. 9, 1957

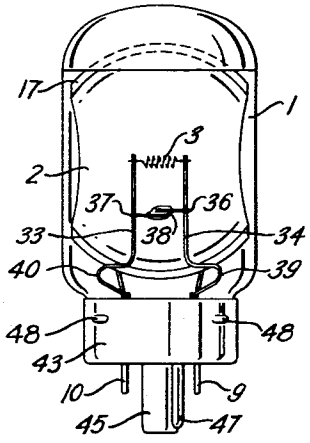

Fig. 1

Fig. 2

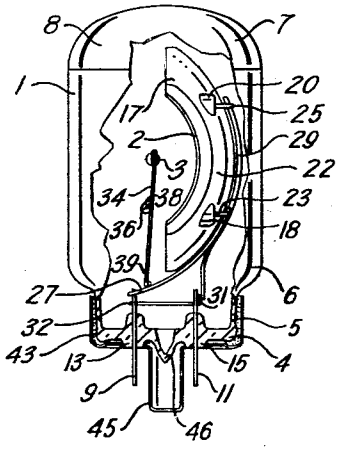

Fig. 3

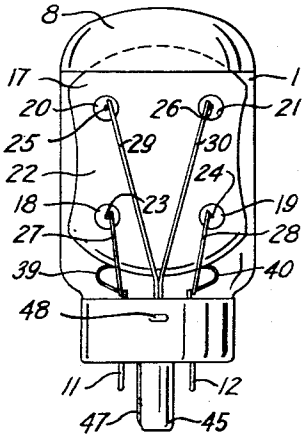

INVENTOR.
WARREN H. HAY
BY Lawrence Burns
ATTORNEY

United States Patent Office 2,994,799 Patented Aug. 1, 1961

2,994,799

PROJECTION LAMP

Warren H. Hay, Beverly, Mass., assignor, by mesne assignments, to Sylvania Electric Products Inc., Wilmington, Del., a corporation of Delaware

Filed Dec. 9, 1957, Ser. No. 701,563
7 Claims. (Cl. 313—113)

This invention relates to electric incandescent lamps and especially to lamps designed for use in moving picture projection devices or in other devices requiring a high concentration of light energy on a limited area.

Such lamps have been made heretofore for use with an external reflector, or with a metallic reflector deposited on the inside of the glass bulb of the lamp. When an external reflector was used, it had to be made large compared with the dimensions of the lamp, in order to reflect a sufficient amount of the light in the desired direction. This necessitated a large enclosure for the projecting system, with consequent cumbersomeness and expense. In addition, there was the difficulty of properly aligning the lamp filament with the reflector, since the lamp has to be made detachable for replacement purposes.

Eliminating the external reflector and using a reflecting surface deposited on the interior or exterior surface of the lamp bulb provided a more compact unit, but introduced the additional difficulty of forming the glass bulb to a special and very precise shape. The shape could not be controlled precisely enough with the usual methods available for molding glass bulbs. Furthermore, the reflector was on the lamp bulb and the filament was on the lamp mount, so the proper positioning of filament and reflector was difficult to control accurately when the flare of the mount was sealed to the open end of the bulb. The alignment had to be fixed with precision while the seal was still hot and plastic, and before it solidified. A base then had to be affixed to the lamp and aligned.

It is found that the above difficulties can be avoided by making the lamp with an internal reflector, separate from the bulb, and supported solely from the same mount which supports the filament. The reflector and filament can then be aligned directly on the mount before the latter is sealed to the bulb. The filament can be supported on wires fixed to the reflector support, and the two lined up approximately with each other before they are even attached as a unit to the mount. If the mount is made on a flat glass disc, or header, with rigid lead-in wires extending therefrom to act as contacts for engagement with a suitable socket, the difficulties of aligning the filament and reflector with a subsequently-attached base, are also eliminated.

The filament and reflector are inserted into the bulb through an opening in the latter, the opening generally being at one end of the bulb, especially when the latter is tubular. It is thus desirable to use a reflector of a shape which will give the greatest amount of light for an overall reflector dimension permitting insertion into the bulb.

The cavity of the reflector will generally be of ellipsoidal or spheroidal shape, that is, it will be a surface of revolution, and so a reflector in which the cavity has a circular perimeter might be expected to be most effective.

However, the diameter of the circular perimeter would have to be small enough to fit through the opening in the bulb, and that would limit the radius which could be used.

I have discovered that a reflector which has its outer perimeter in the approximate shape of a circle cut off along two chords transverse to a diameter and at opposite

ends thereof, with an elongated coiled filament set parallel to said diameter, gives the greatest light output of any reflector-filament combination which can be inserted into a given bulb opening.

The reason for this appears to be that an elongated filament emits most of its light laterally, and less in the direction of its longitudinal axis, so that the loss in cutting off the zones at the ends of said axis, which do not receive much light from the filament, is less than the gain obtained by the use of a larger reflector radius, which is effective in the direction of greater light emission transverse to the filament.

In other words, I make the filament considerably longer than its outside diameter, and then utilize its directional light-emitting qualities in conjunction with a cut-off reflector.

I have discovered also that the lumen maintenance of the lamp during life is greatly increased by placing the filament somewhat ahead of the reflector, that is, so that the reflector does not extend over the filament in a vertical plane when the lamp is used in base-down position. In that way, the convection currents carrying material evaporated from the filament, carry it directly upward without depositing it on the reflector, and eventually carry it downward behind the reflector, because of the lower temperature there. The evaporated material is accordingly deposited in a place where it does not cut down in the light output, that is, it is deposited on the surface of the glass bulb behind the reflector.

The filament can be made in a concentrated coil; and the reflector placed very close to the coil, so that a very small reflector will suffice.

With the reflector close to the filament, however, a small change in position of the filament will greatly affect the focusing of the bulb; accordingly, the filament should be one which will not be appreciably deformed on heating to its operating temperature. The filament must remain in a substantially fixed position. Such a filament coil can be made in the manner shown in United States patent application Serial No. 674,364, filed July 26, 1957, by Wilfrid G. Matheson.

When a lamp according to the invention is used in a moving picture projector, the condenser lens or lenses ordinarily used in such apparatus becomes unnecessary, and the film gate can be positioned so that it will be filled with an image of the filament, the image being enough out of focus to be fairly uniform in intensity over the area of the gate. The solid angle of the reflector need only be great enough so that the light rays passing through the film gate will be at the proper angle to fill the objective lens used on the other side of the gate, for focussing the picture on a screen.

The increase in efficiency of useful light output is so great that, in a projector for 8 mm. film, a 50-watt filament in a lamp of our invention can be as effective as a 500-watt filament with an external reflector, thus greatly reducing the amount of heat to be dissipated in the projector or other devices in which the lamp is used. However, because of manufacturing tolerances, voltage requirements and the like, a 150-watt filament will generally be used.

Other objects, features and advantages of the invention will be apparent from the following specification, taken in conjunction with the attached drawings in which:

FIG. 1 is a front view of one embodiment of the invention;

FIG. 2 is a side view, partly in section, of the same device; and

FIG. 3 is a back view of the device.

In FIG. 1, a front view of the finished lamp, the tubular glass bulb **1** encloses a reflecting surface **2** and a

tungsten filament **3** at or near the focus of the reflecting surface.

The manner in which the reflecting surface **2** and filament **3** are supported, is shown in more detail in FIGS. 2 and 3. In FIG. 2, the bulb **1** has a disc-like glass header **4** sealed to its neck **5**, the latter being of smaller diameter than the main portion **6** of bulb **1**. The other end **7** of the bulb is rounded as shown, and preferably covered by the coating **8**, which can be of a colored or black enamel glaze suitable for sealing to the glass of the bulb. This coating increases the heat radiation from the top of the bulb so that it operates at a lower temperature.

In order to provide supports and external contacts, lead-in wires **9**, **10**, **11**, **12** are sealed through nubs **13**, **14**, **15**, **16** in the header **4**, a metal capable of sealing to the glass nubs being used. Such metals are well-known in the art. For example, if the bulb **1** is of the soda-lime glass often used in lamps, the lead-in wires **9–12** can be of so-called copper-weld wires, which are of stiff steel with a thin copper sheath.

The reflecting surface **2** is of metal, for example, silver or aluminum, deposited on the concave surface of the glass piece **17** by methods well-known in the art, for example, deposition by evaporation and condensation in a vacuum. The glass piece **17** has nubs **18**, **19**, **20**, **21** on its convex back surface **22**. A short wire **23**, **24**, **25**, **26** extends out of each nub, and is sealed therein, the wires **23–26** extending only part way into the glass in order to be insulated from the metal reflecting surface **2** and to avoid damaging the latter.

The reflecting surface **2** can, of course, be present on an all-metal piece, if desired, in which case glass beads could be inserted in the lead-in wires to prevent short-circuit of the filament by the metallic reflecting piece to which the lead-in wires would be mechanically connected. A copper-piece, plated with silver can be used as the reflector.

Support wires **27**, **28**, **29**, **30** are welded to the wires **23**, **24**, **25**, **26**, one of the latter wires to each support wire. The longer support wires **29**, **30**, extend downwardly and toward each other, being curved slightly to conform to the curvature of glass piece **17**, and are welded at their bottom ends to a metal cross-wire **31**, which extends between the lead-in wires **11**, **12**, being welded to each of them. This gives a firm support for the top end of the glass piece **17**.

Each of the wires **23**, **24**, extending from nubs **18**, **19**, is affixed to one, and one only, of the support wires **27**, **28**, which curve downwardly around the convex back **22** of glass piece **17** to the lead-in wires **9**, **10**, each being welded to one and one only of said lead-in wires. As a result of this and the additional supporting wires **27**, **28**, the glass piece **17** is supported very rigidly from the header **4**.

The filament **3** is a coiled-coil of tungsten wire, of a non-sag construction formed as in copending U.S. patent application Serial No. 674,364, filed July 26, 1957, by W. G. Matheson, and assigned to the same assignee as the present application.

In order to support and make electrical connections to the filament **3**, metal support wires **33**, **34**, are clamped or welded to the ends thereof, one end to each wire, and the wires are spaced apart by the transverse spacing wires **36**, **37**, which are sealed to insulating glass bead **38**, their ends being spaced apart in the bead to prevent short-circuiting of the filament. The support wires **33**, **34** are curved to form bights at their bottom ends **39**, **40** and welded near those ends to, respectively, the support wires **27**, **28**, which in turn, are welded to the lead-in wires **9**, **10**.

In that manner, the filament **3** and the metallic reflecting surface **2** are held in perfect alignment with each other independently of the alignment between header **4** and bulb **1**, and, of course, without the need of subsequent alignment with an external reflector. However, due to the closeness of the filament to the reflecting surface, even a small variation in filament position can affect the amount of light reflected to a given spot and so the filament must be formed in a manner which prevents sagging when the filament is heated. A method of so forming a filament is shown in the Matheson application above mentioned.

The filament and reflector can be aligned on the mount by means of jigs, if desired, and the jigs afterward removed.

A metal base shell **43** is attached to the neck **5** of the bulb **1** by the cement **44**, and carries the outwardly projecting piece **45**, which covers and protects the sealed exhaust tube **46** and, together with the keyway **47**, also serves to center the lamp in its socket, the base and socket being shown in copending U.S. application Serial No. 553,367, filed December 15, 1955, by William Morgan. The glass nubs **13**, **15**, and the like, pass through holes in the bottom of the shell **43**, as shown in FIG. 2, so that the lead-in contact wires **9**, **10**, **11**, **12** are insulated from said shell.

The rounded protuberances **48**, which may be three in number, extend radially outward from the base shell **43**, to help position the lamp in its socket, as shown in said co-pending application of William Morgan.

For best results, the reflector should be highly polished to give a smooth surface. An elliptical surface can be used, with the filament offset from the focus enough to give fairly uniform illumination at the film gate. A sharp image of the filament would be undesirable.

Very good results have been obtained with a spherical reflector, with the filament positioned about half way between the center of the sphere and the surface of the reflector. In one embodiment, the reflector has been a spherical surface with a radius of curvature of about 0.956 inch radius, with the filament about 0.495 inch from the surface and 0.050 inch in front of the center line of the lamp.

The reflector was made with a circular perimeter, and then a zone ground off at each of two opposite ends, that is along a chord at each end on the perimeter, considering the reflector as a sphere or an ellipsoid. The width of the reflector from chord to chord along the perimeter was then about 1⅜ inches, which fitted satisfactorily into the 1½ inch glass bulb used.

In order to get as large a reflecting surface as possible into a tubular bulb, or into a bulb having a circular opening through which the reflector is to be inserted, the grinding off the end zones can be done to planes at a slight angle to the plane normal to the original circular perimeter. An angle of about 15° has been satisfactory in the lamps described, the angle being taken toward the reflector. The opposite edges **49**, **50**, of the reflector will then bow inwardly, as shown in FIGS. 1 and 3.

The filament was about 2.0 mm. in outside diameter and about 7 millimeters long, being a coiled coil as shown in the example in a patent application Serial No. 674,364, filed July 26, 1957, by Wilfrid G. Matheson. A filament long in comparison to its diameter is most effective with the reflector described.

No condensing lens is necessary with the device of our invention.

In order to give good efficiency and life, the lamp is filled with a gas inert with respect to the filament, preferably at a pressure above atmospheric. A filling of nitrogen at a pressure of about 1000 millimeters of mercury is satisfactory. The exhaust tube **4** can be sealed at a pressure above atmospheric by methods now well-known in the art, for example as shown in copending U.S. patent application Serial No. 594,305, filed June 27, 1956, by Alexander Rosenblatt et al., assigned to the same assignee as the present application, and which is now U.S. Patent 2,837,880, granted June 10, 1958.

In a lamp having a reflecting surface deposited on the

inside of the glass bulb, the metallic vapors from the filament tend to deposit on the reflector, blackening it and reducing its reflective power. When the reflector is spaced from the bulb, however, the convection currents will carry the vapors upward and away from the reflector, so that they will eventually deposit on the glass bulb. A considerable part of the vapor will deposit on the part of the bulb behind the reflector where it does not reduce the light output.

Various modifications of the device described can be made by a person skilled in the art without departing from the spirit and scope of the invention.

What I claim is:

1. An electric incandescent lamp comprising a sealed tubular light-transmitting bulb, a portion at least of which is light-transmissive, a filament within said bulb, a concave reflector large compared with said filament within said bulb, spaced from the walls thereof and transverse to the axis thereof and in reflecting relationship to said filament, said filament being set outside said reflector whereby convection currents from the fiilament can pass directly upward without impinging on the reflector surface when the axis of the reflector is horizontal.

2. An incandescent lamp comprising a sealed bulb of light-transmitting material, an elongated coiled filament within said bulb, and a concave reflector in reflecting relationship to said filament and having ends beyond the ends of said filament, each of said ends being in a plane nearly transverse to said filament but at a slight angle with the transverse plane.

3. An incandescent lamp comprising a sealed tubular bulb, the tubular sides of which are of light transmitting material, a gas filling within said bulb, a filament within said bulb, said filament having its axis transverse to the longitudinal axis of said tubular bulb, a concave reflector within said bulb, spaced from the walls of said bulb and in reflecting relationship to said filament, said reflector having its axis transverse to said filament and to the longitudinal axis of the bulb to direct light outwardly through the tubular wall of said bulb, the edges of said concave reflector terminating in opposing planes nearly transverse to the axis of said filament but at a slight angle

with the transverse planes, whereby the edges of the reflector bow inwardly, said edges being close to the tubular walls of the bulb.

4. The lamp of claim 3, wherein the filament is positioned outside the plane of the forward arcs of said reflector, whereby the convention current from the filament can pass directly upward without impinging on the reflector surface when the axis of the reflector is horizontal.

5. The lamp of claim 3, in which the reflecting surface is metallic, and is insulated from both ends of the filament and from the lead-in wires.

6. The lamp of claim 3, in which the reflecting surface is a metal coating on a formed glass piece, and is insulated from both ends of the filament and from the leading wires.

7. An incandescent lamp comprising a sealed bulb of light-transmitting material, said bulb having tubular walls, an elongated coiled filament inside said bulb, and a concave reflector in reflecting relationship to said filament and having ends extending beyond the ends of said filament, each of said ends of said reflector being substantially in a separate plane parallel to a plane through the axis of the tube and close to the tubular wall of the bulb, said reflector being positioned to direct light through the tubular wall of said bulb.

References Cited in the file of this patent

UNITED STATES PATENTS

299,885	Welsh	June 3, 1884
654,208	Washburn	July 24, 1900
1,344,429	Ricker	June 22, 1920
1,635,116	Du Breuil	July 5, 1927
1,800,926	Baird	Apr. 14, 1931
1,835,705	Gilleland et al.	Dec. 8, 1931
1,863,547	Arbuckle	June 14, 1932
1,936,854	Parker	Nov. 28, 1933
1,998,967	Raynolds	Apr. 23, 1935
2,144,438	Birdseye	Jan. 17, 1939
2,795,722	Burgener et al.	June 11, 1957