US011181373B2

(12) **United States Patent**
Matsudaira et al.

(10) **Patent No.: US 11,181,373 B2**
(45) **Date of Patent: Nov. 23, 2021**

(54) **VIBRATION TYPE GYROSCOPE**

(71) Applicant: **DENSO CORPORATION**, Kariya (JP)

(72) Inventors: **Nobuaki Matsudaira**, Kariya (JP); **Yoshikazu Furuta**, Kariya (JP); **Tomohiro Nezuka**, Kariya (JP)

(73) Assignee: **DENSO CORPORATION**, Kariya (JP)

(*) Notice: Subject to any disclaimer, the term of this patent is extended or adjusted under 35 U.S.C. 154(b) by 0 days.

(21) Appl. No.: **17/018,209**

(22) Filed: **Sep. 11, 2020**

(65) **Prior Publication Data**

US 2020/0408526 A1 Dec. 31, 2020

Related U.S. Application Data

(63) Continuation of application No. PCT/JP2019/003655, filed on Feb. 1, 2019.

(30) **Foreign Application Priority Data**

Mar. 29, 2018 (JP) JP2018-064591

(51) **Int. Cl.**
G01C 25/00 (2006.01)
G01C 19/5776 (2012.01)

(52) **U.S. Cl.**
CPC ***G01C 19/5776*** (2013.01); ***G01C 25/00*** (2013.01)

(58) **Field of Classification Search**
CPC G01C 19/5776; G01C 25/00; H01L 29/84; B81B 7/02
See application file for complete search history.

(56) **References Cited**

U.S. PATENT DOCUMENTS

4,665,748 A * 5/1987 Peters G01C 19/56 73/504.03
4,712,426 A * 12/1987 Peters G01C 19/5776 73/504.04
9,574,902 B2 * 2/2017 Okon G01C 25/005
10,191,079 B2 * 1/2019 Shirazi G01P 15/125
2007/0194842 A1 * 8/2007 Hotelling G01C 19/5719 329/307
2012/0096942 A1 * 4/2012 Hayashi G01C 19/5776 73/504.12

(Continued)

FOREIGN PATENT DOCUMENTS

JP 2008-082924 A 4/2008
JP 4763565 B2 8/2011

Primary Examiner — David J Bolduc
(74) *Attorney, Agent, or Firm* — Posz Law Group, PLC

(57) **ABSTRACT**

A vibration type gyroscope uses a resonator formed of a MEMS. At the time of startup, a lock state determination unit stabilizes an amplitude of a drive signal and outputs a lock signal when the amplitude is stabilized. A phase shifter generates an orthogonal signal by shifting, by 90°, the phase of the drive signal, and a phase compensator outputs a phase signal having a phase corresponding to a control signal based on the orthogonal signal and the in-phase signal of the drive signal. A multiplier multiplies a sense signal and the phase signal outputted from the phase compensator, and a control LPF performs filtering on a multiplication result. A control unit inputs a zero level signal to a PI controller during an initial state, and starts phase control by receiving an output signal of the control LPF, and ends the control when the signal is stabilized around the zero level.

16 Claims, 28 Drawing Sheets

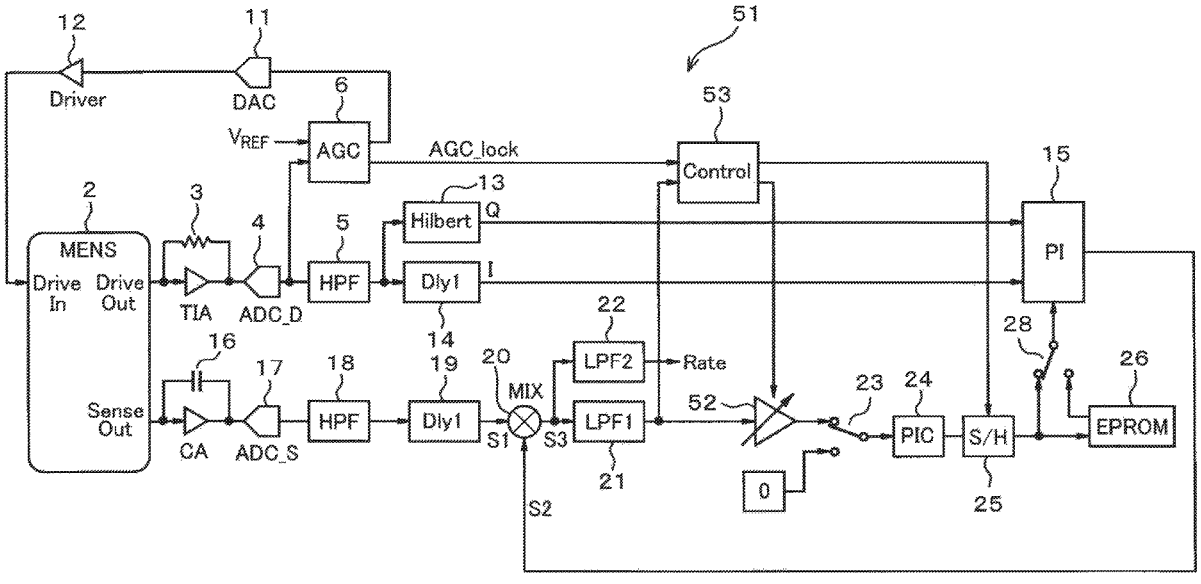

(56) **References Cited**

U.S. PATENT DOCUMENTS

2012/0146740 A1* 6/2012 Furuta H04B 1/0475 332/144
2013/0100999 A1* 4/2013 Furuta H04B 1/40 375/219
2014/0169237 A1* 6/2014 Furuta H04B 1/0475 370/278
2014/0190258 A1* 7/2014 Donadel G01C 19/5776 73/504.12
2015/0020589 A1* 1/2015 Kim G01C 19/5776 73/504.12
2015/0057959 A1* 2/2015 Ezekwe G01C 19/5776 702/96
2015/0153174 A1* 6/2015 Kim G01C 19/5776 73/504.12
2015/0176992 A1* 6/2015 Entringer G01C 19/567 73/504.12
2015/0226556 A1* 8/2015 Aaltonen G01C 19/5712 73/504.12
2015/0226557 A1* 8/2015 Aaltonen H03B 5/364 73/504.12
2015/0276405 A1* 10/2015 Rastegar G01C 19/5776 73/504.12
2015/0276407 A1* 10/2015 Bhandari G01C 19/5776 73/504.12
2016/0003618 A1* 1/2016 Boser G01C 19/5755 73/504.12
2016/0091339 A1* 3/2016 Weinberg G01C 19/5776 73/1.77
2016/0161256 A1* 6/2016 Lee H03L 7/087 73/504.12
2016/0258826 A1* 9/2016 Nezuka G01L 1/2262
2016/0320187 A1* 11/2016 Higuchi G01C 19/5776
2017/0019087 A1* 1/2017 Nicollini H03H 11/18
2017/0023364 A1* 1/2017 Gregory G01P 15/13
2017/0167875 A1* 6/2017 Bhandari B81B 7/02
2017/0254645 A1* 9/2017 Kanemoto G01C 19/5726
2017/0261562 A1* 9/2017 Honda G01R 35/00
2018/0205572 A1* 7/2018 Kishigami H04L 25/0272
2018/0226938 A1* 8/2018 Kuisma H03H 9/2405
2018/0245946 A1* 8/2018 Weinberg G01C 19/5684
2018/0274924 A1* 9/2018 Mecchia G01C 19/5776
2018/0274941 A1* 9/2018 Quartiroli G01C 19/5776
2019/0277656 A1* 9/2019 Painter G01C 25/005
2020/0011702 A1* 1/2020 Clark G01C 25/005
2021/0033399 A1* 2/2021 Sheard G01C 19/5684

* cited by examiner

FIG. 1

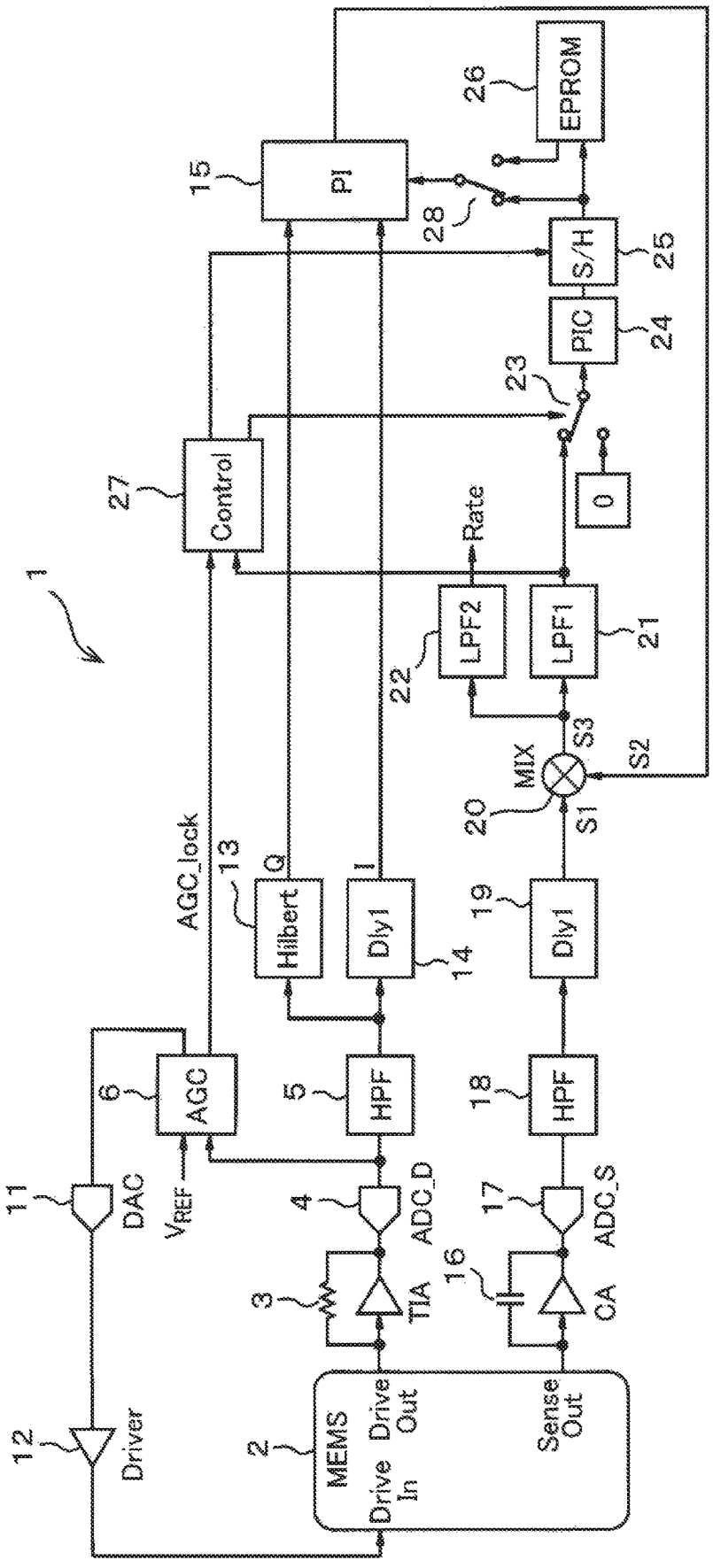
1
2
MEMS
Drive In
Drive Out
Sense Out
3
TIA
4
ADC_D
5
HPF
6
AGC
11
DAC
12
Driver
13
Hilbert
Q
I
14
Dly1
15
PI
16
CA
17
ADC_S
18
HPF
19
Dly1
20
MIX
S1
S2
S3
21
LPF1
22
LPF2
23
24
PIC
25
S/H
26
EPROM
27
Control
28
0
Rate
AGC_lock
V_{REF}

FIG. 2

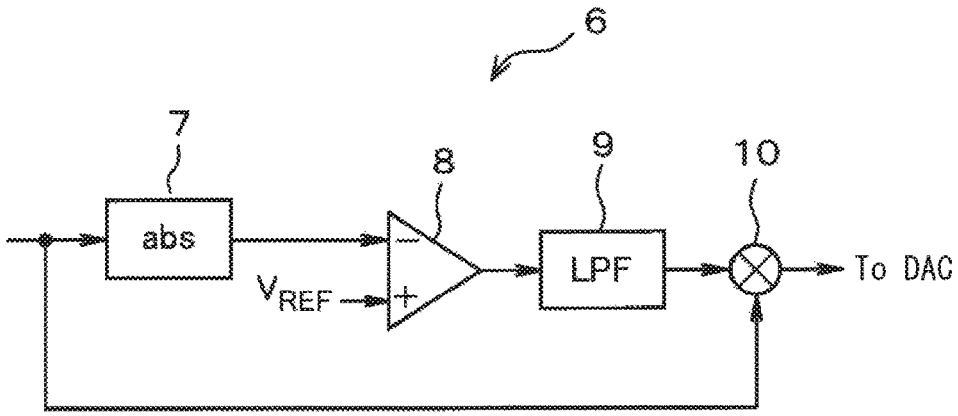
6
7
8
9
10
abs
LPF
To DAC
V_{REF}
−
+

FIG. 3

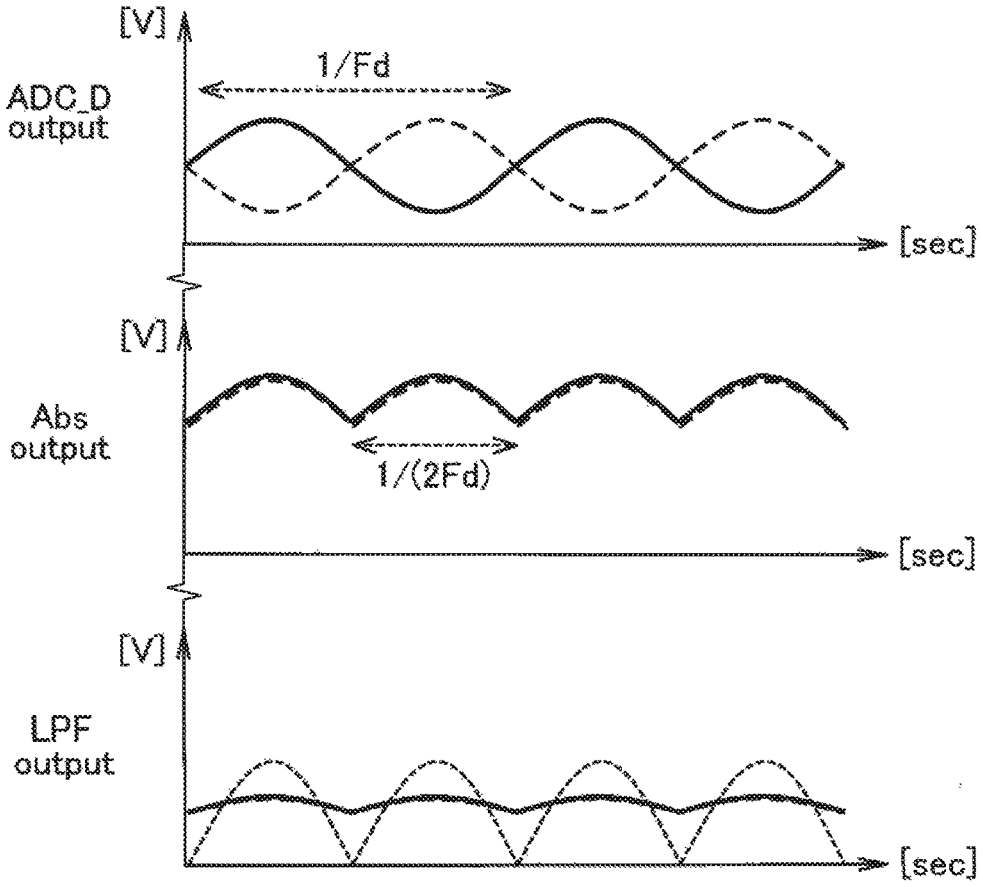
[V]
1/Fd
ADC_D output
[sec]
[V]
Abs output
1/(2Fd)
[sec]
[V]
LPF output
[sec]

FIG. 4

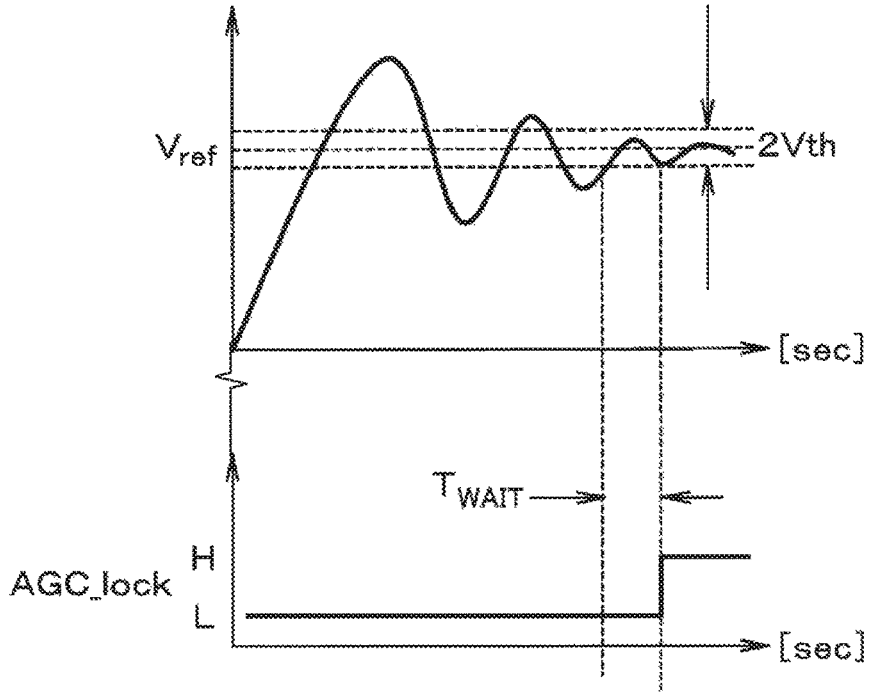
Vref
2Vth
[sec]
TWAIT
AGC_lock
H
L
[sec]

FIG. 5

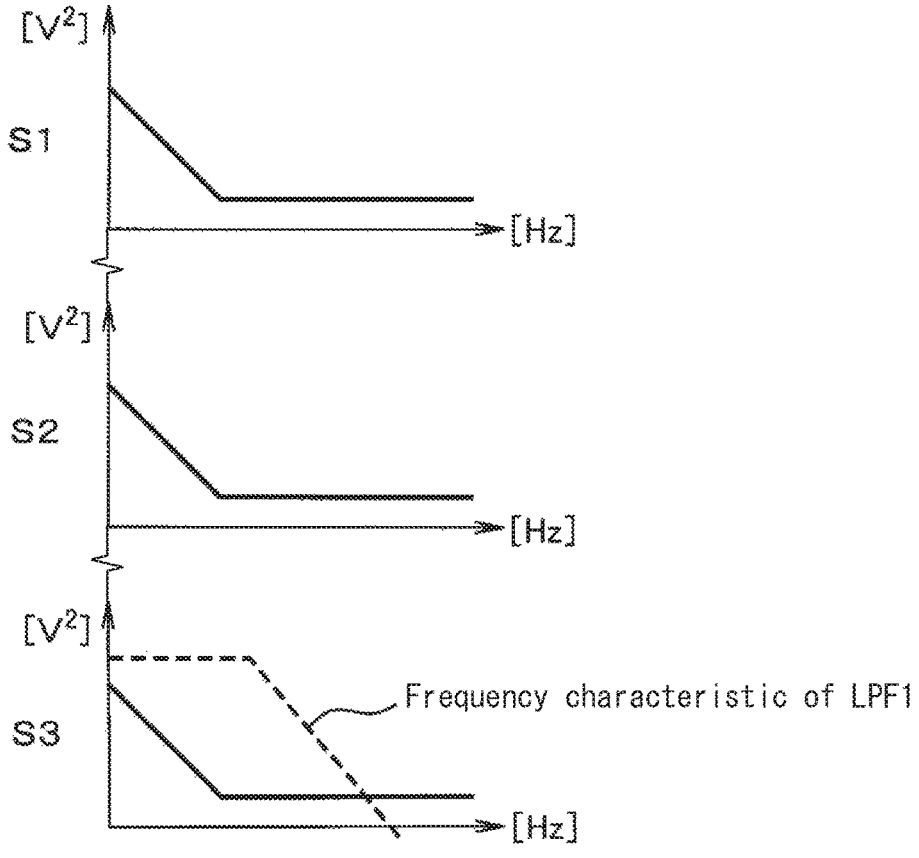
[V²]
S1
[Hz]
[V²]
S2
[Hz]
[V²]
S3
Frequency characteristic of LPF1
[Hz]

FIG. 6

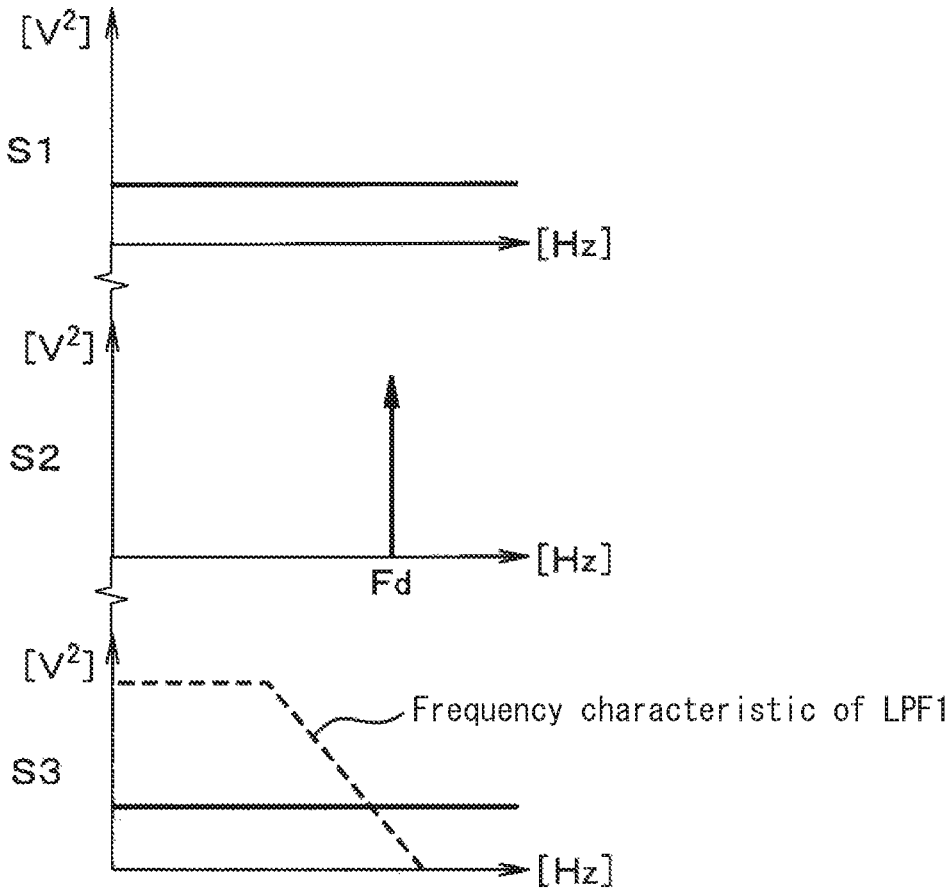

FIG. 7

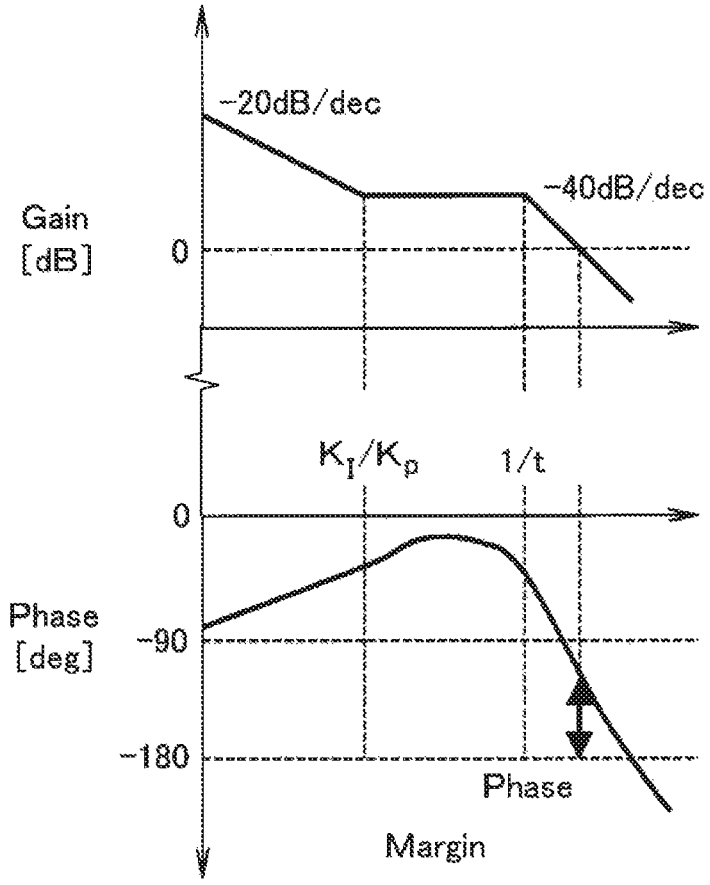
-20dB/dec
-40dB/dec
Gain
[dB]
0
K_I/K_p
1/t
0
Phase
[deg]
-90
-180
Phase
Margin

FIG. 8

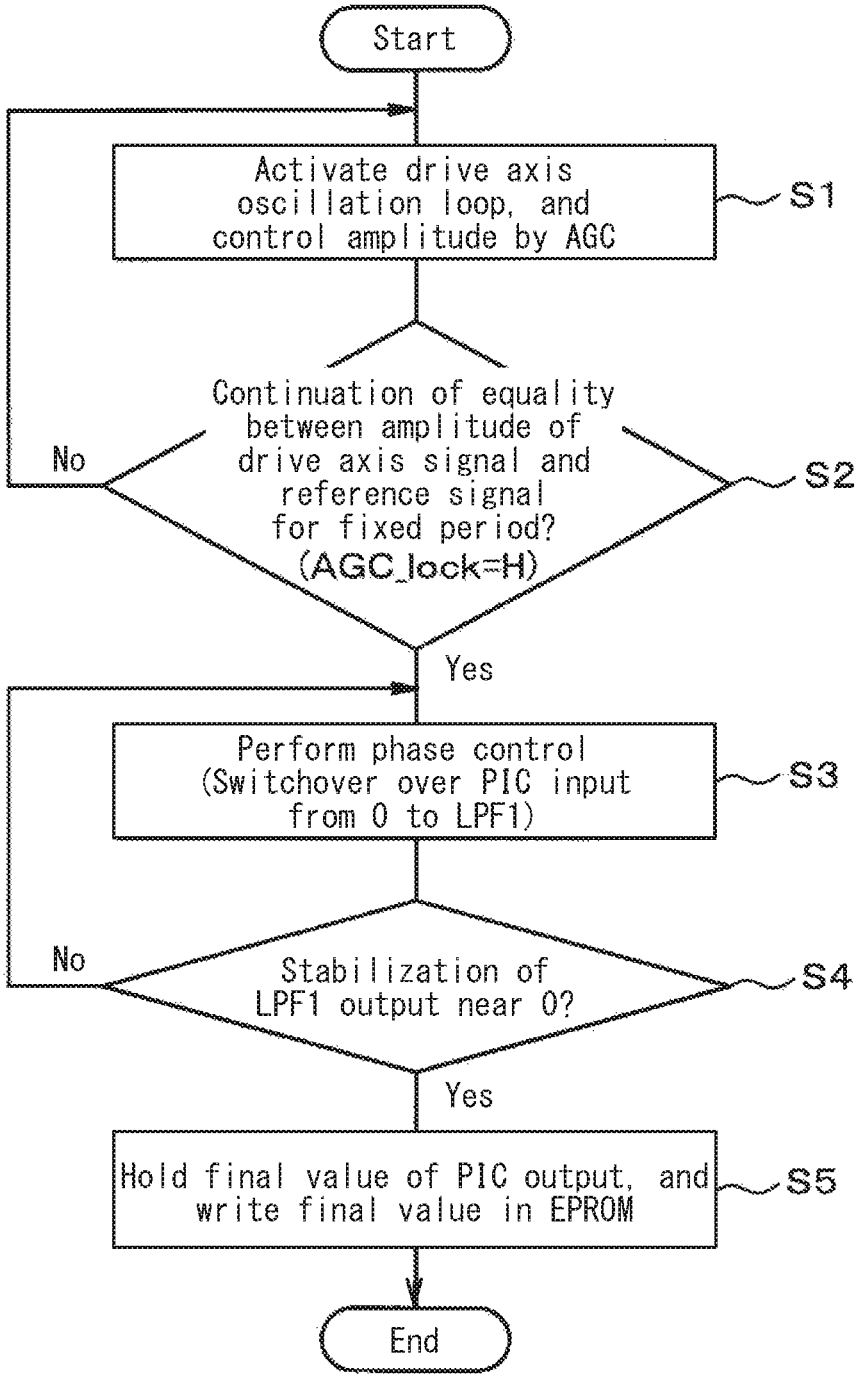
Start
Activate drive axis oscillation loop, and control amplitude by AGC
S1
Continuation of equality between amplitude of drive axis signal and reference signal for fixed period? (AGC_lock=H)
No
S2
Yes
Perform phase control (Switchover over PIC input from 0 to LPF1)
S3
Stabilization of LPF1 output near 0?
No
S4
Yes
Hold final value of PIC output, and write final value in EPROM
S5
End

FIG. 9

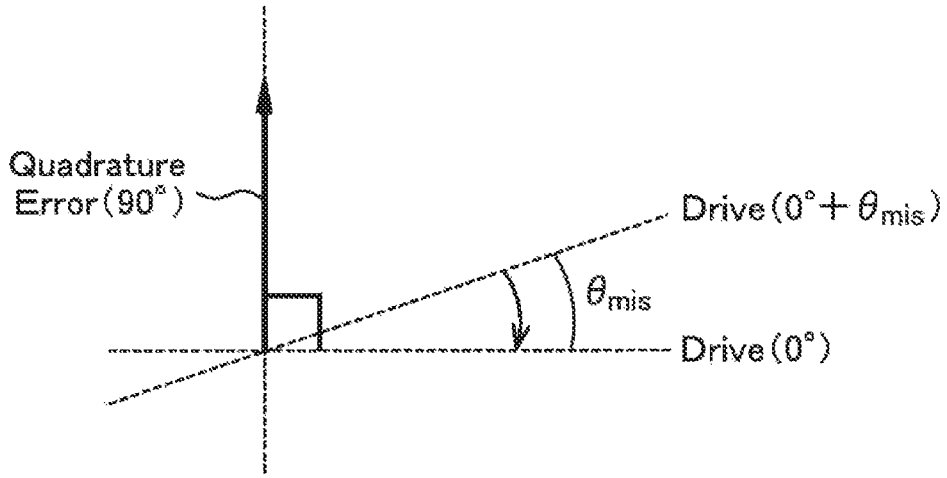

FIG. 10

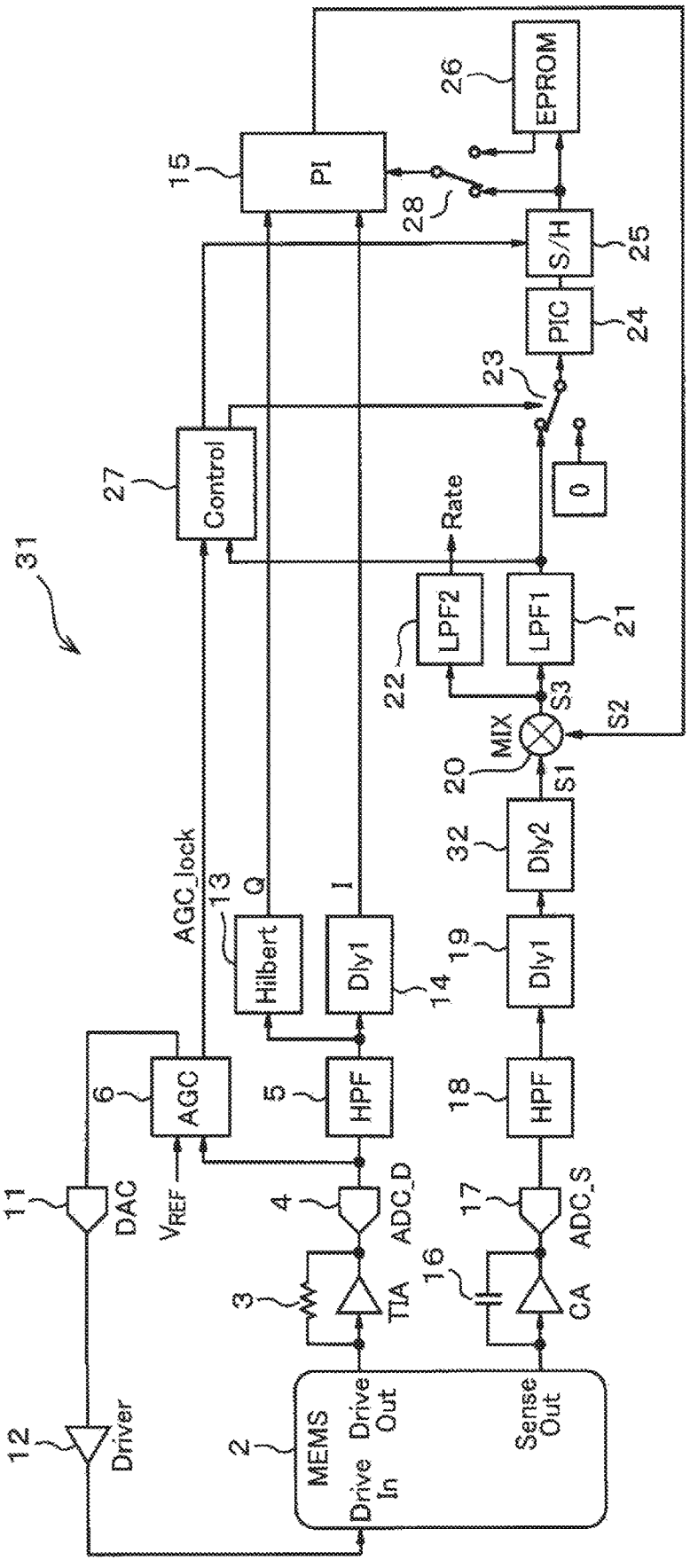
31
MEMS
Drive In
Drive Out
Sense Out
2
Driver
12
DAC
11
TIA
3
ADC_D
4
CA
16
ADC_S
17
V_{REF}
AGC
6
HPF
5
HPF
18
Hilbert
13
AGC_lock
Q
I
Dly1
14
Dly1
19
Dly2
32
MIX
20
S1
S2
S3
LPF2
22
LPF1
21
Rate
Control
27
0
23
PIC
24
S/H
25
PI
15
28
EPROM
26

FIG. 11

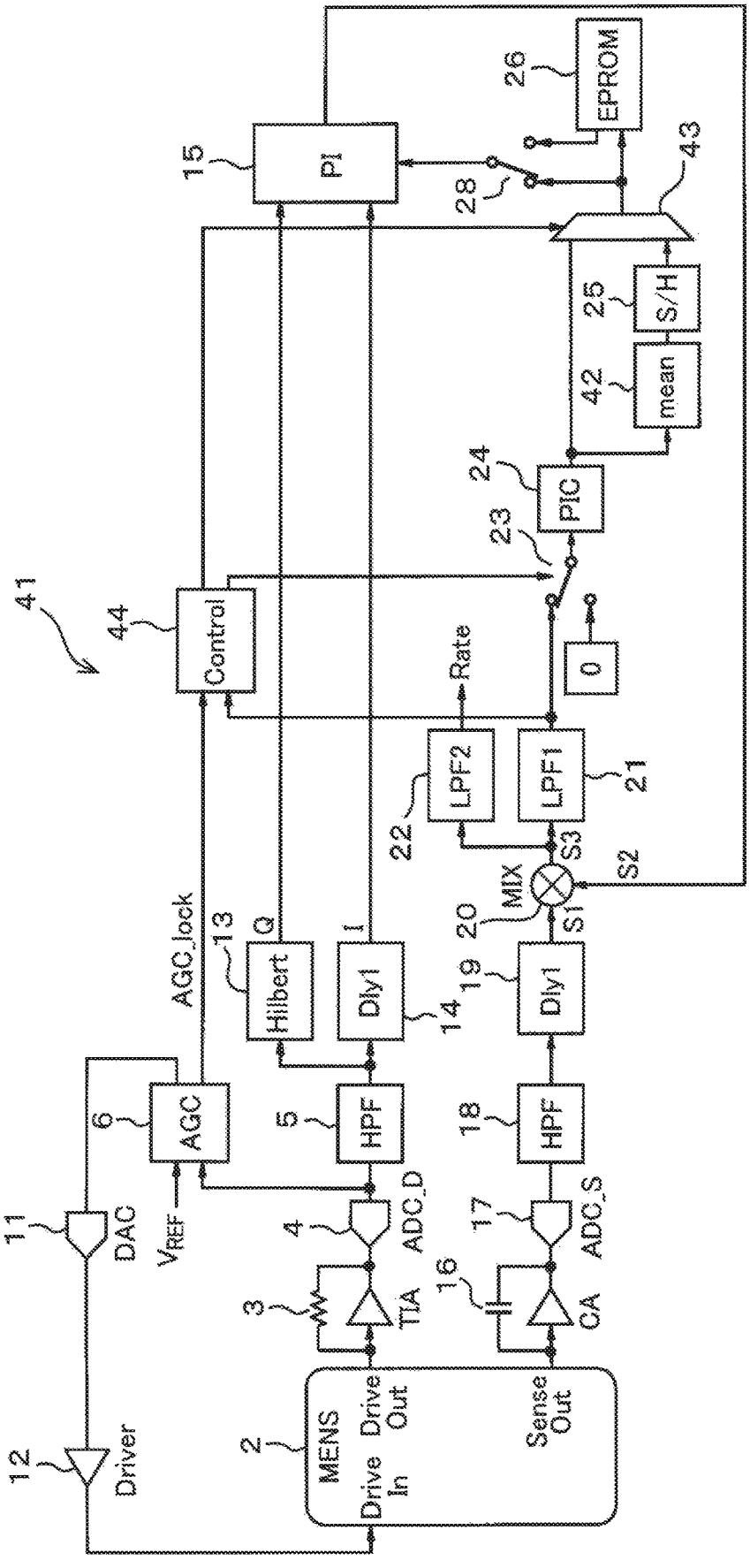
41
44
Control
15
PI
26
EPROM
28
43
25
S/H
42
mean
24
PIC
23
0
Rate
22
LPF2
LPF1
21
S3
S2
MIX
S1
20
AGC_lock
13
Q
I
Hilbert
Dly1
14
19
Dly1
6
AGC
5
HPF
18
HPF
11
DAC
V_{REF}
4
ADC_D
17
ADC_S
3
TIA
16
CA
12
Driver
2
MENS
Drive In
Drive Out
Sense Out

FIG. 12

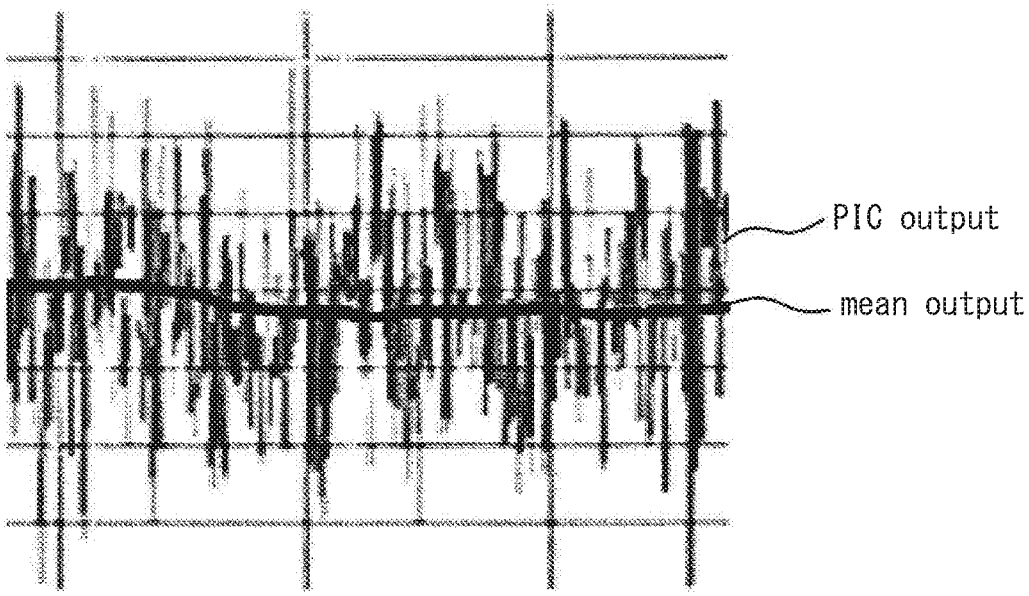

FIG. 13

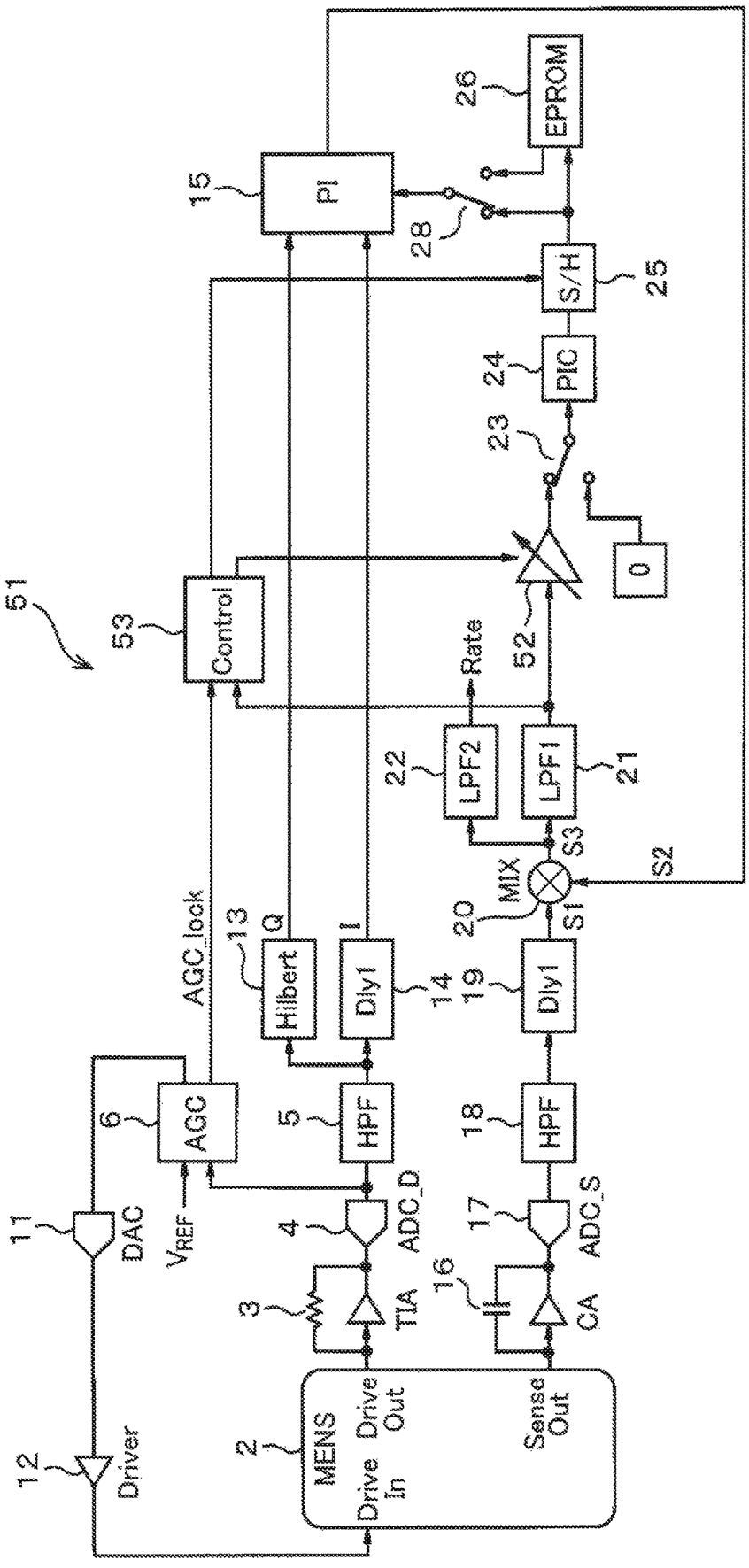
MENS
Drive In
Drive Out
Sense Out
Driver
DAC
TIA
ADC_D
CA
ADC_S
AGC
HPF
HPF
Hilbert
Dly1
Dly1
AGC_lock
Q
I
MIX
S1
S2
S3
LPF2
LPF1
Rate
Control
PI
PIC
S/H
EPROM
0
V_{REF}
2
3
4
5
6
11
12
13
14
15
16
17
18
19
20
21
22
23
24
25
26
28
51
52
53

FIG. 14

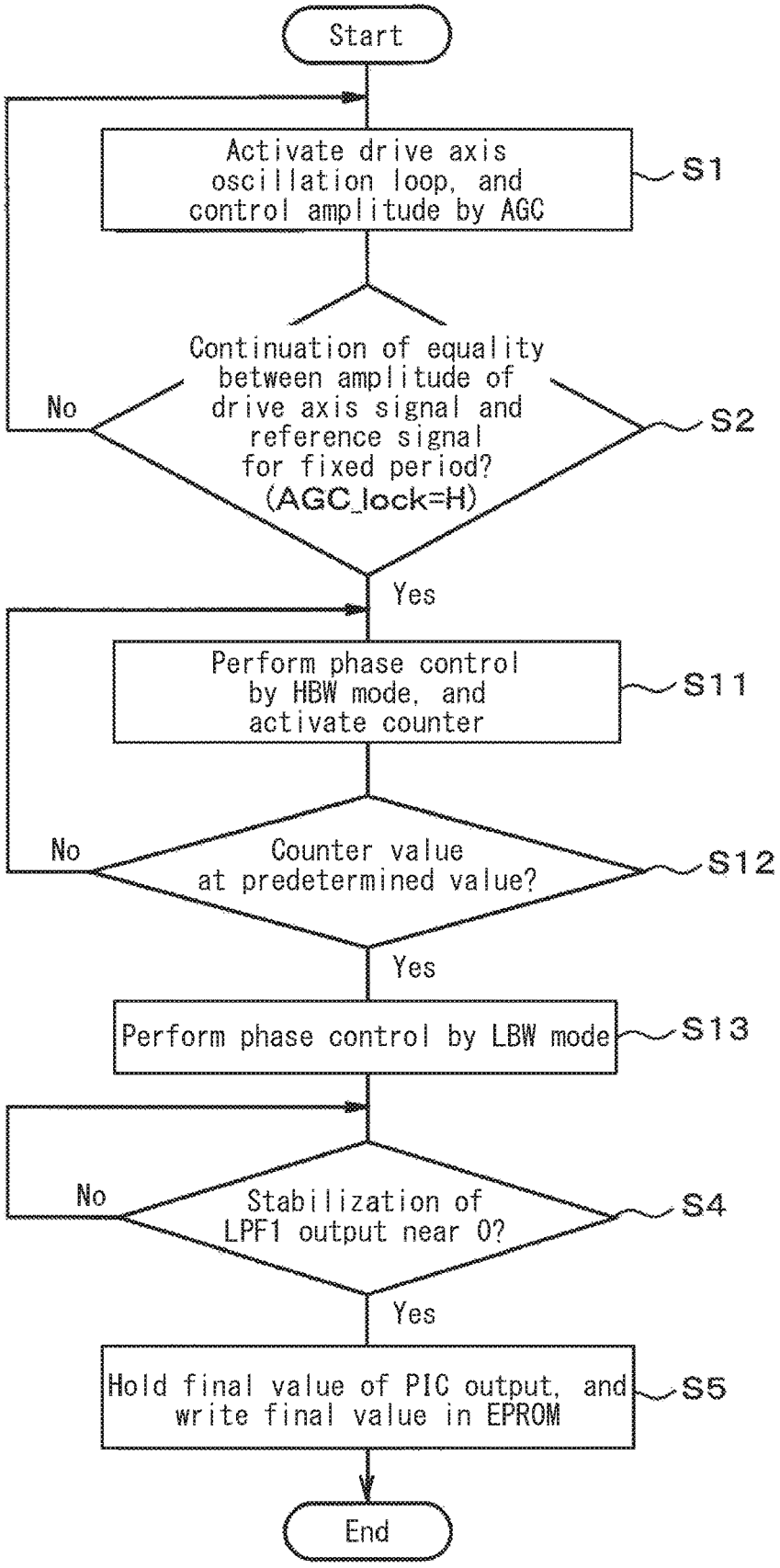
Start
Activate drive axis oscillation loop, and control amplitude by AGC
S1
Continuation of equality between amplitude of drive axis signal and reference signal for fixed period? (AGC_lock=H)
S2
No
Yes
Perform phase control by HBW mode, and activate counter
S11
Counter value at predetermined value?
S12
No
Yes
Perform phase control by LBW mode
S13
Stabilization of LPF1 output near 0?
S4
No
Yes
Hold final value of PIC output, and write final value in EPROM
S5
End

FIG. 15

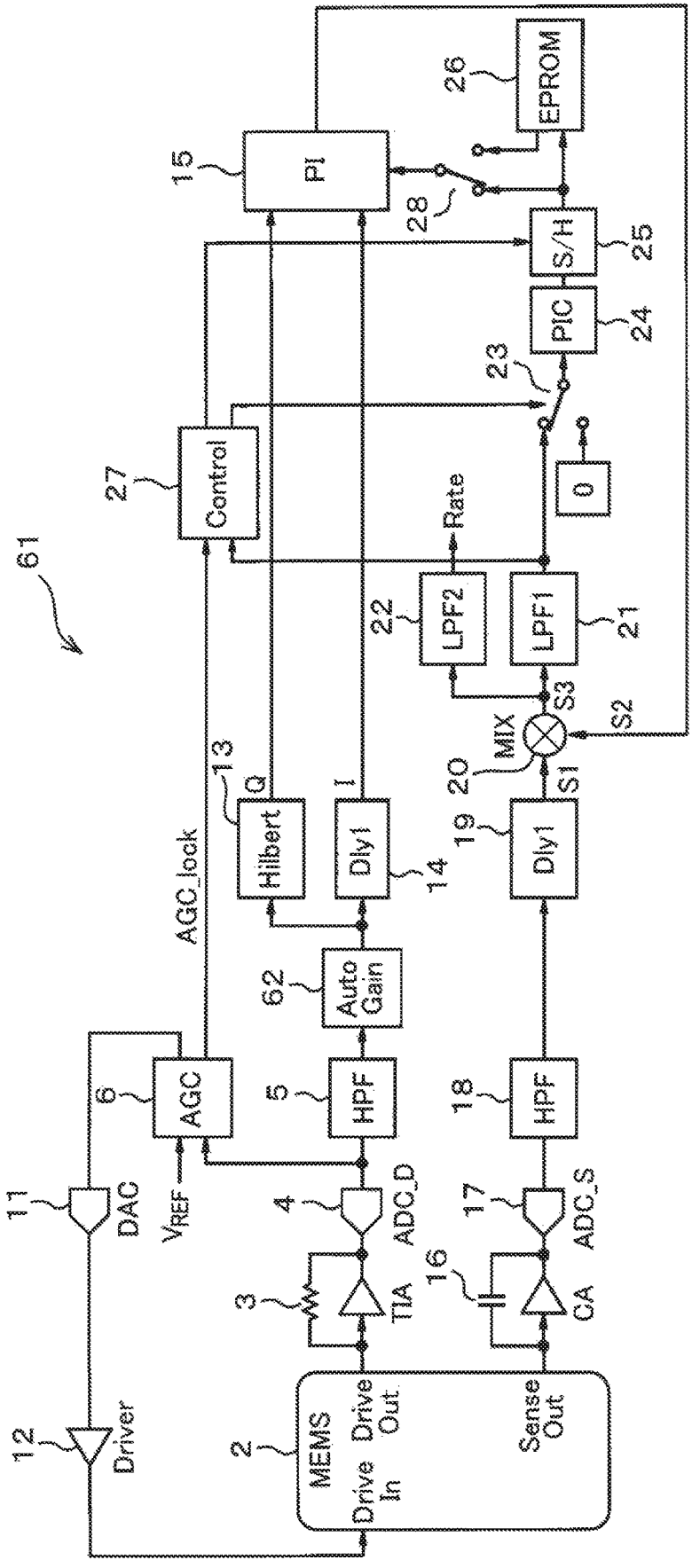
61
MEMS
Drive In
Drive Out
Sense Out
2
Driver
12
DAC
11
V_{REF}
AGC
6
TIA
3
ADC_D
4
HPF
5
CA
16
ADC_S
17
HPF
18
AGC_lock
Auto Gain
62
Hilbert
13
Q
I
Dly1
14
Dly1
19
MIX
20
S1
S2
S3
LPF2
22
LPF1
21
Rate
0
Control
27
PIC
24
S/H
25
23
PI
15
28
EPROM
26

FIG. 16

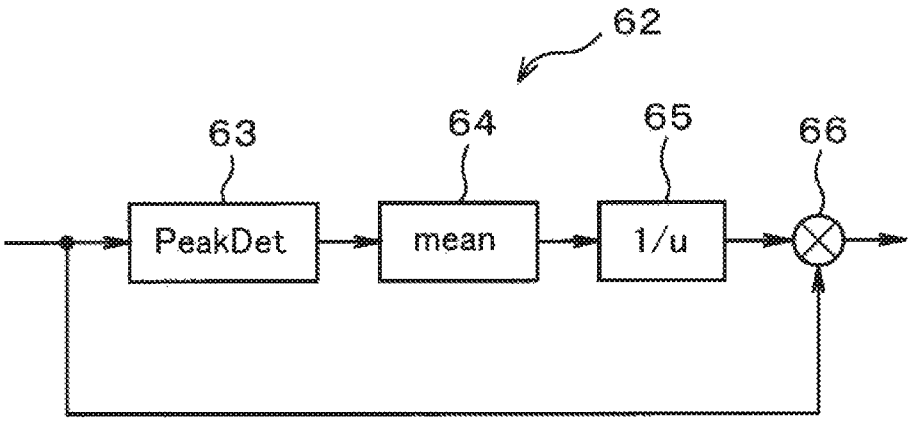

FIG. 17

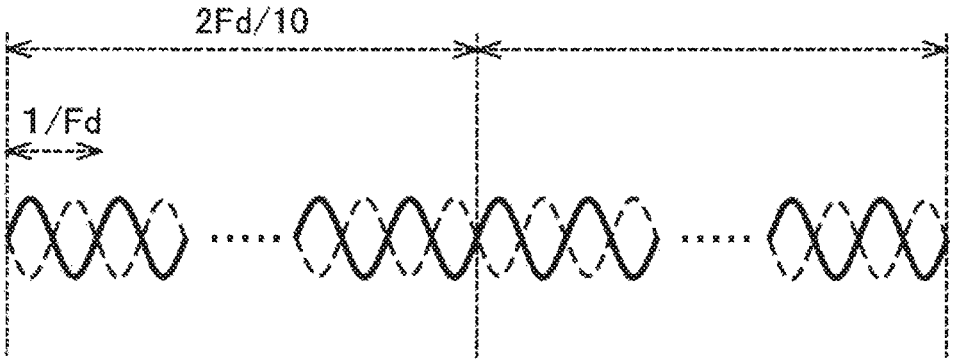

FIG. 18

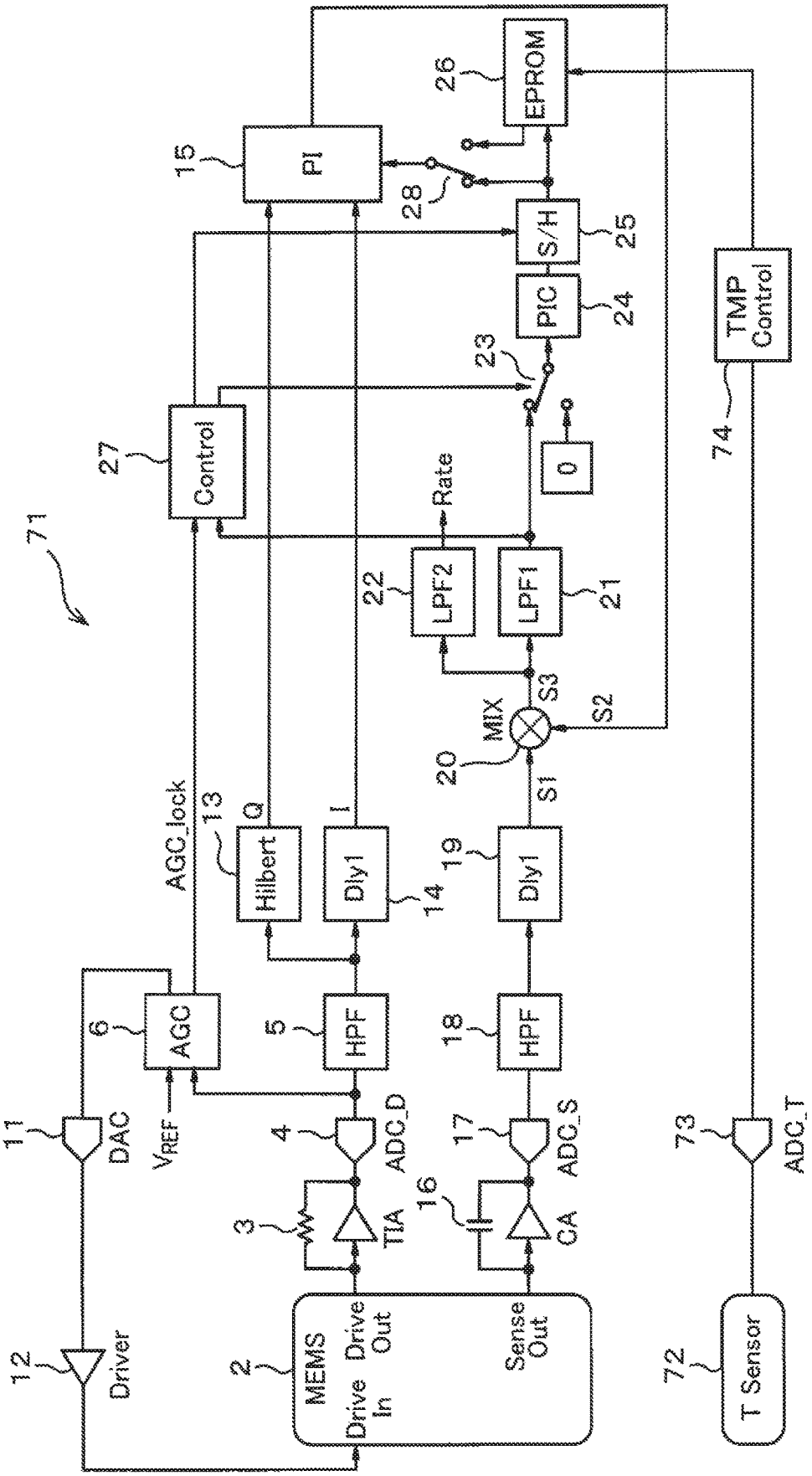
71
MEMS
Drive In
Drive Out
Sense Out
2
Driver
12
DAC
11
V_{REF}
AGC
6
AGC_lock
TIA
3
ADC_D
4
HPF
5
Hilbert
13
Q
I
Dly1
14
CA
16
ADC_S
17
HPF
18
Dly1
19
S1
MIX
20
S3
S2
LPF2
22
LPF1
21
Rate
Control
27
0
23
PIC
24
S/H
25
PI
15
28
EPROM
26
TMP Control
74
ADC_T
73
T Sensor
72

FIG. 19

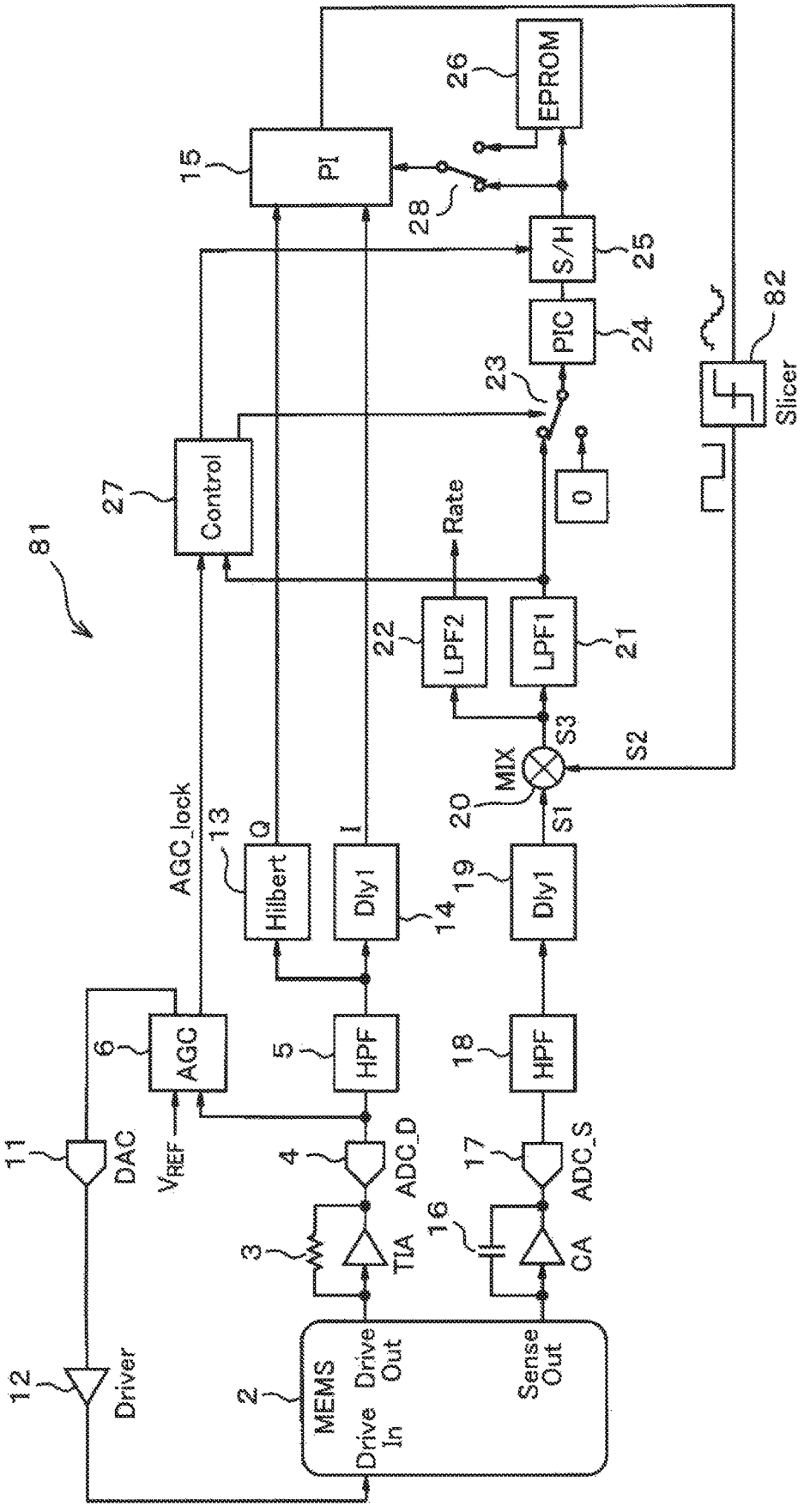
81
MEMS
Drive In
Drive Out
Sense Out
2
Driver
12
DAC
11
TIA
3
ADC_D
4
CA
16
ADC_S
17
AGC
6
HPF
5
HPF
18
Hilbert
Dly1
14
Dly1
19
AGC_lock
13
Q
I
VREF
MIX
20
S1
S2
S3
LPF2
22
LPF1
21
Rate
Control
27
PI
15
EPROM
26
28
S/H
25
PIC
24
23
0
Slicer
82

FIG. 20

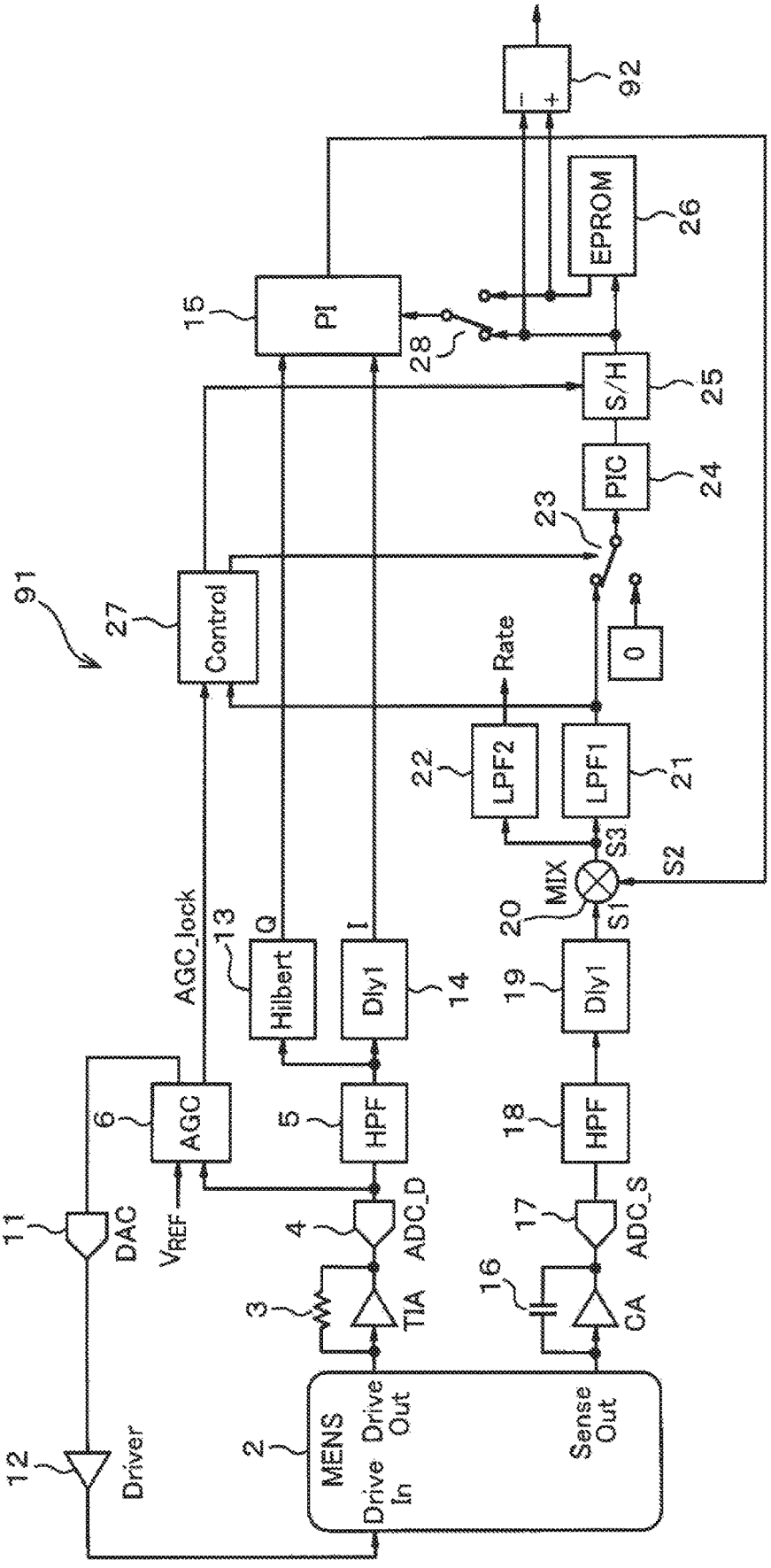
91
92
EPROM
26
15
PI
28
S/H
25
PIC
24
23
27
Control
0
Rate
22
LPF2
LPF1
21
S3
S2
MIX
20
S1
AGC_lock
13
Q
I
Hilbert
Dly1
14
19
Dly1
6
AGC
5
HPF
18
HPF
11
DAC
V_{REF}
4
ADC_D
17
ADC_S
3
TIA
16
CA
12
Driver
2
MEMS
Drive In
Drive Out
Sense Out

FIG. 21

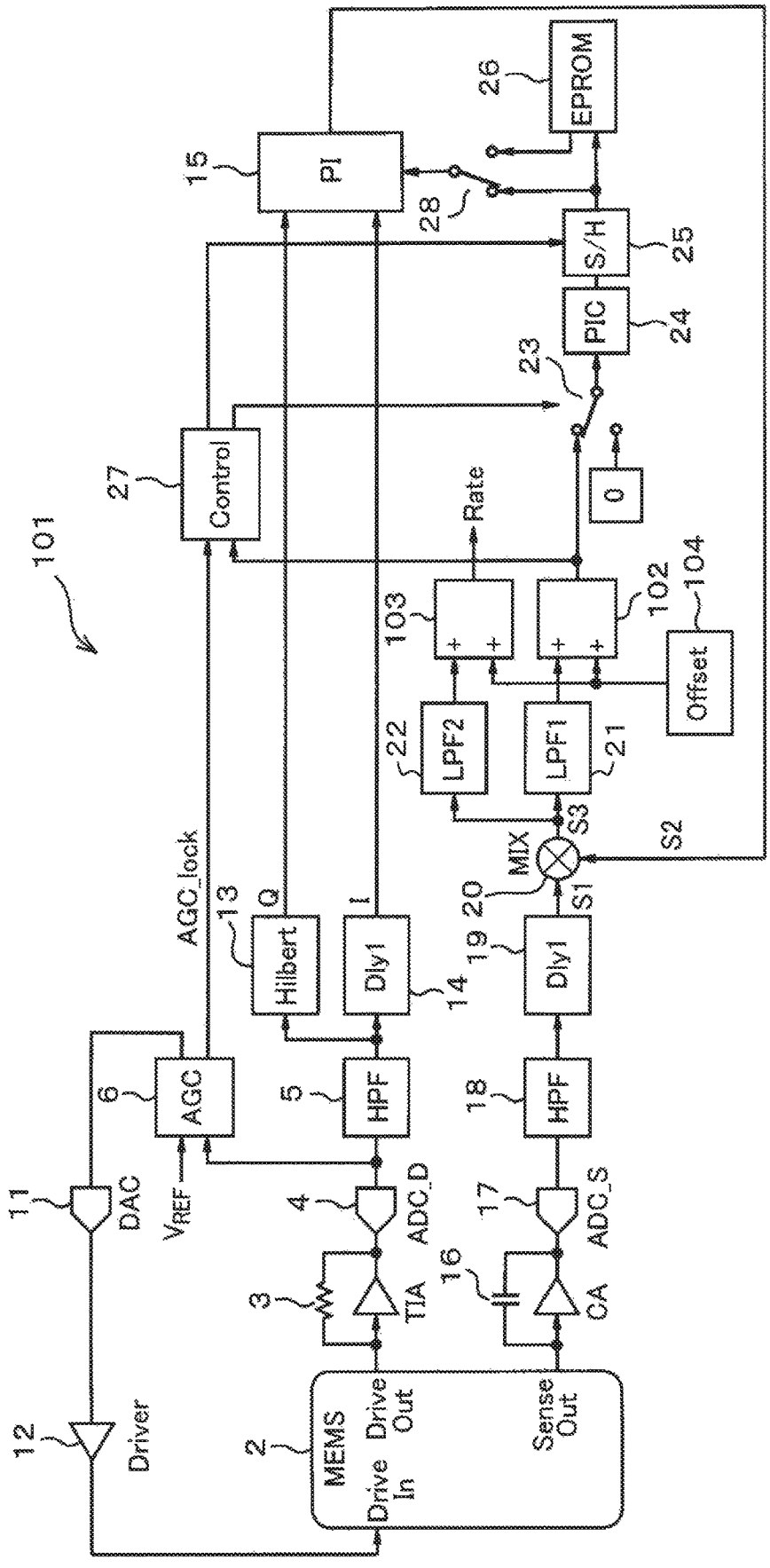
101
2
MEMS
Drive In
Drive Out
Sense Out
3
TIA
4
ADC_D
5
HPF
6
AGC
11
DAC
12
Driver
16
CA
17
ADC_S
18
HPF
19
Dly1
20
MIX
S1
S2
S3
21
LPF1
22
LPF2
103
102
104
Offset
Rate
0
23
24
PIC
25
S/H
26
EPROM
28
15
PI
27
Control
AGC_lock
13
Hilbert
Q
I
14
Dly1
V_{REF}

FIG. 22

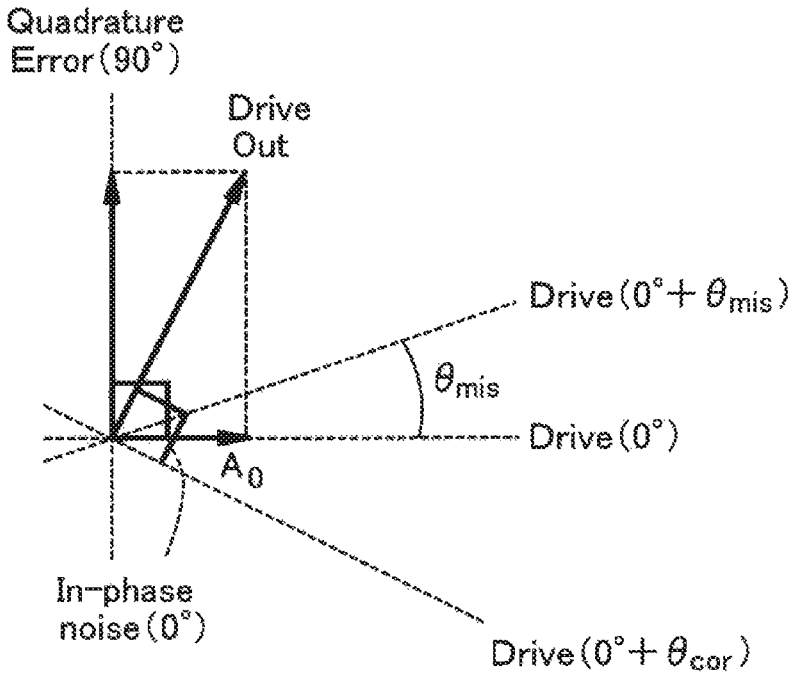
Quadrature
Error(90°)
Drive
Out
Drive(0°+θmis)
θmis
Drive(0°)
A0
In-phase
noise(0°)
Drive(0°+θcor)

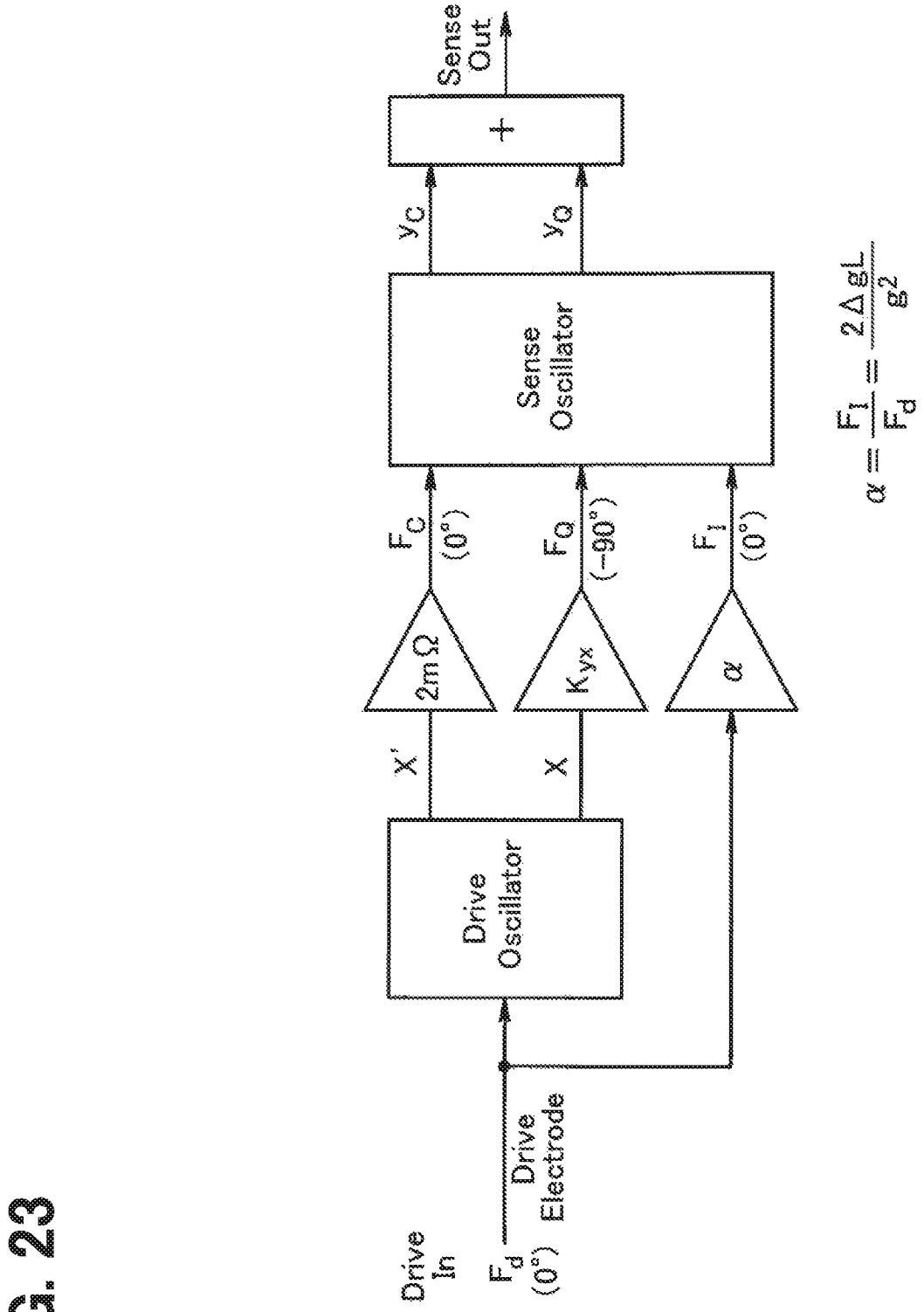
Drive In
F_d (0°)
Drive Electrode
Drive Oscillator
X'
X
2mΩ
K_{yx}
α
F_C (0°)
F_Q (−90°)
F_I (0°)
Sense Oscillator
y_C
y_Q
+
Sense Out
$\alpha = \frac{F_I}{F_d} = \frac{2\Delta gL}{g^2}$

FIG. 23

FIG. 24

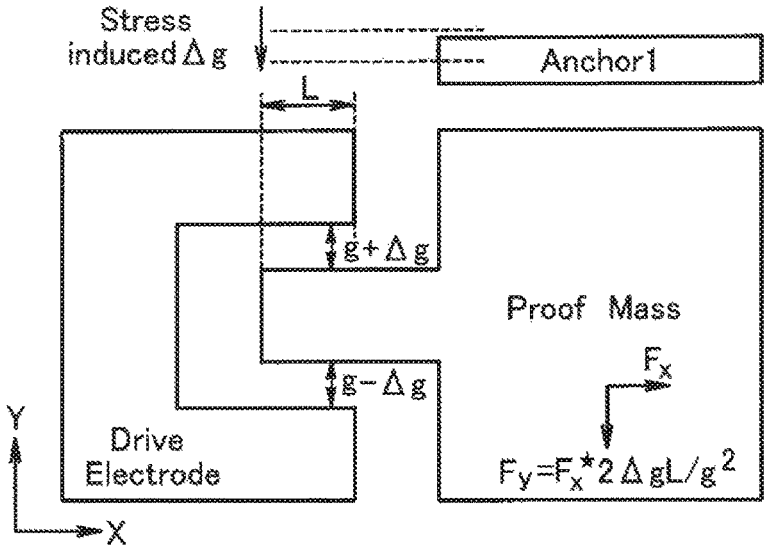
Stress
induced Δg
Anchor1
L
g+Δg
Proof Mass
Fx
g−Δg
Y
Drive
Electrode
Fy=Fx*2ΔgL/g2
X

FIG. 25

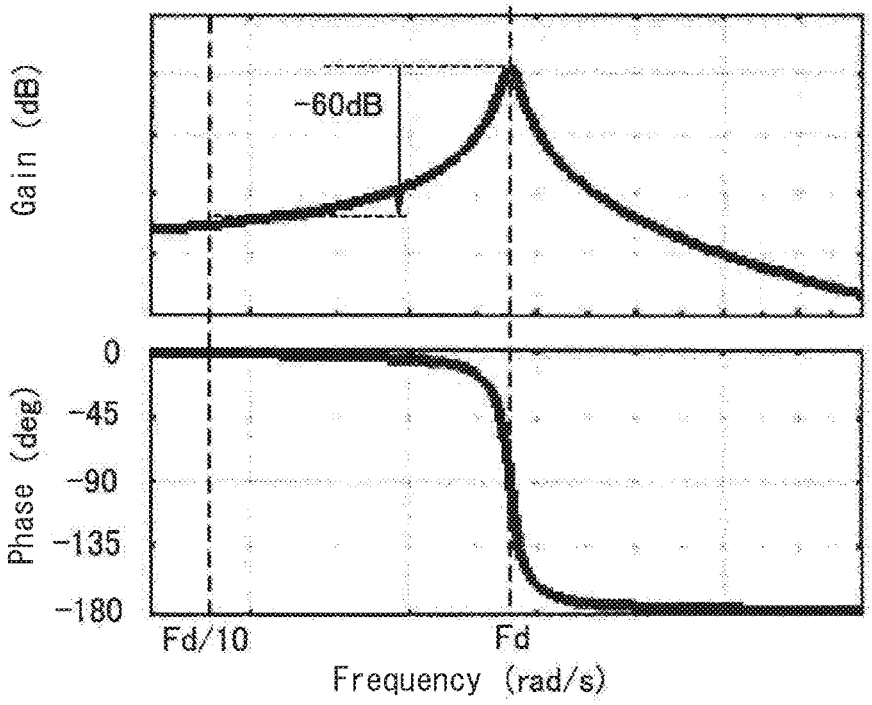
Gain (dB)
-60dB
Phase (deg)
0
-45
-90
-135
-180
Fd/10
Fd
Frequency (rad/s)

FIG. 26

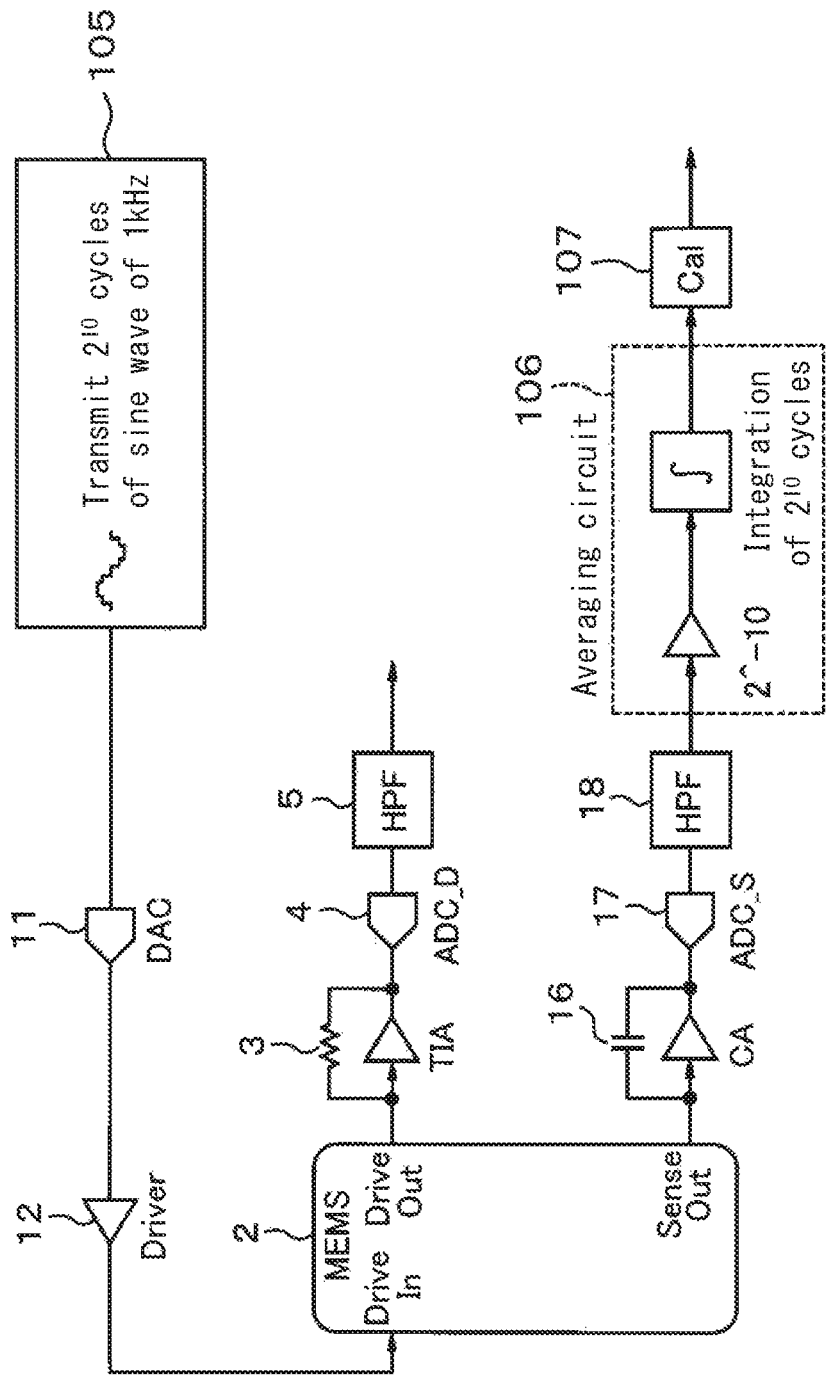
105
Transmit 2^{10} cycles of sine wave of 1kHz
11
DAC
12
Driver
2
MEMS
Drive In
Drive Out
Sense Out
3
TIA
4
ADC_D
5
HPF
16
CA
17
ADC_S
18
HPF
106
Averaging circuit
2^{-10}
Integration of 2^{10} cycles
107
Cal

FIG. 27

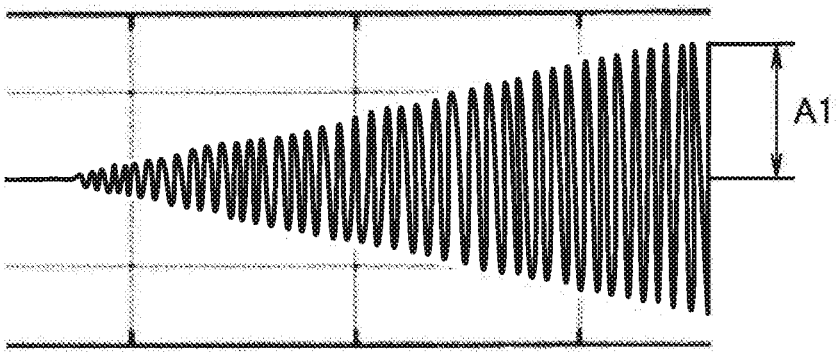

FIG. 28

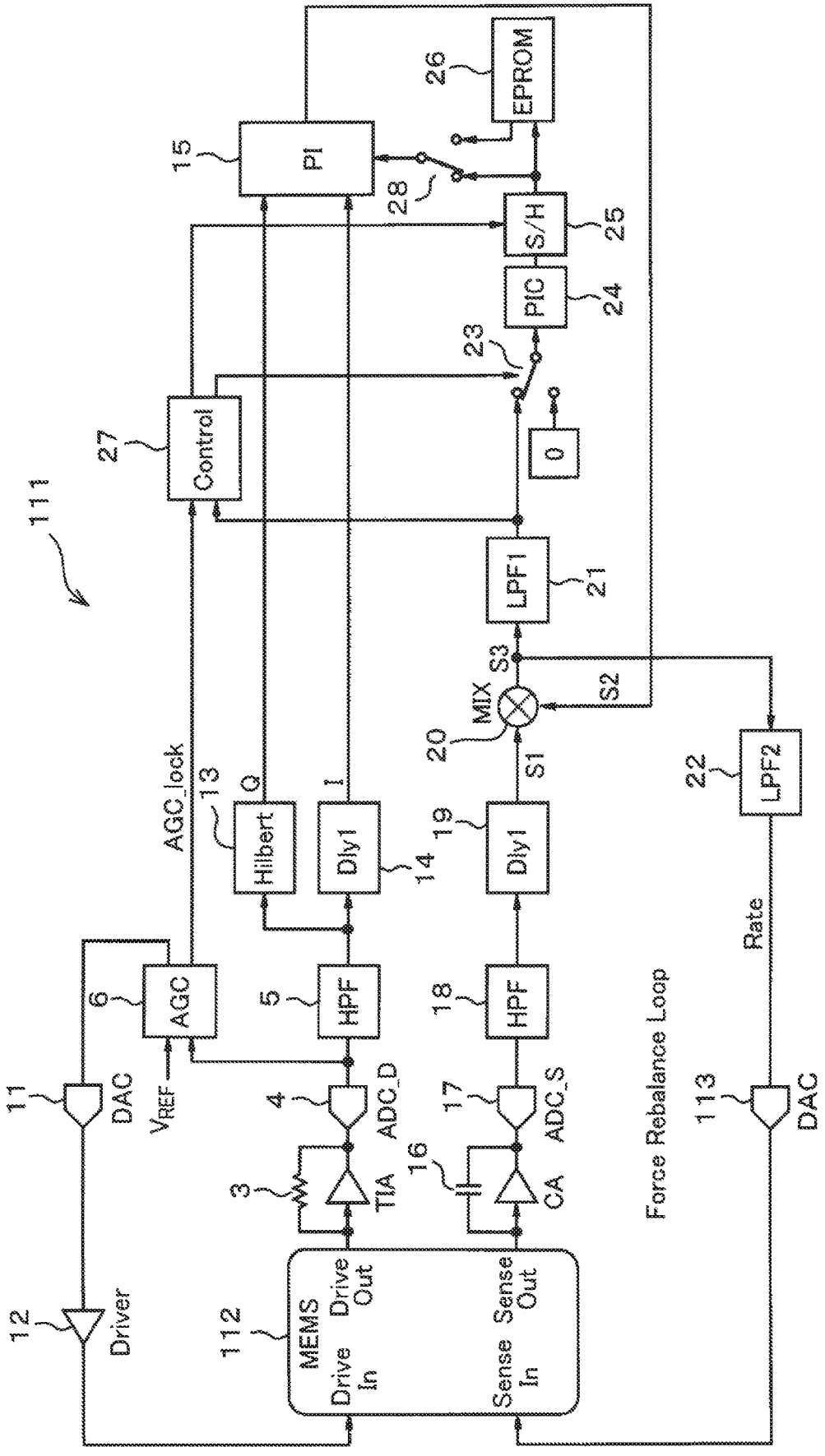
111
112
MEMS
Drive In
Drive Out
Sense In
Sense Out
Driver
DAC
TIA
CA
ADC_D
ADC_S
HPF
AGC
V_{REF}
AGC_lock
Hilbert
Dly1
Q
I
MIX
LPF1
LPF2
S1
S2
S3
PI
PIC
S/H
EPROM
Control
0
Force Rebalance Loop
Rate
DAC

FIG. 29

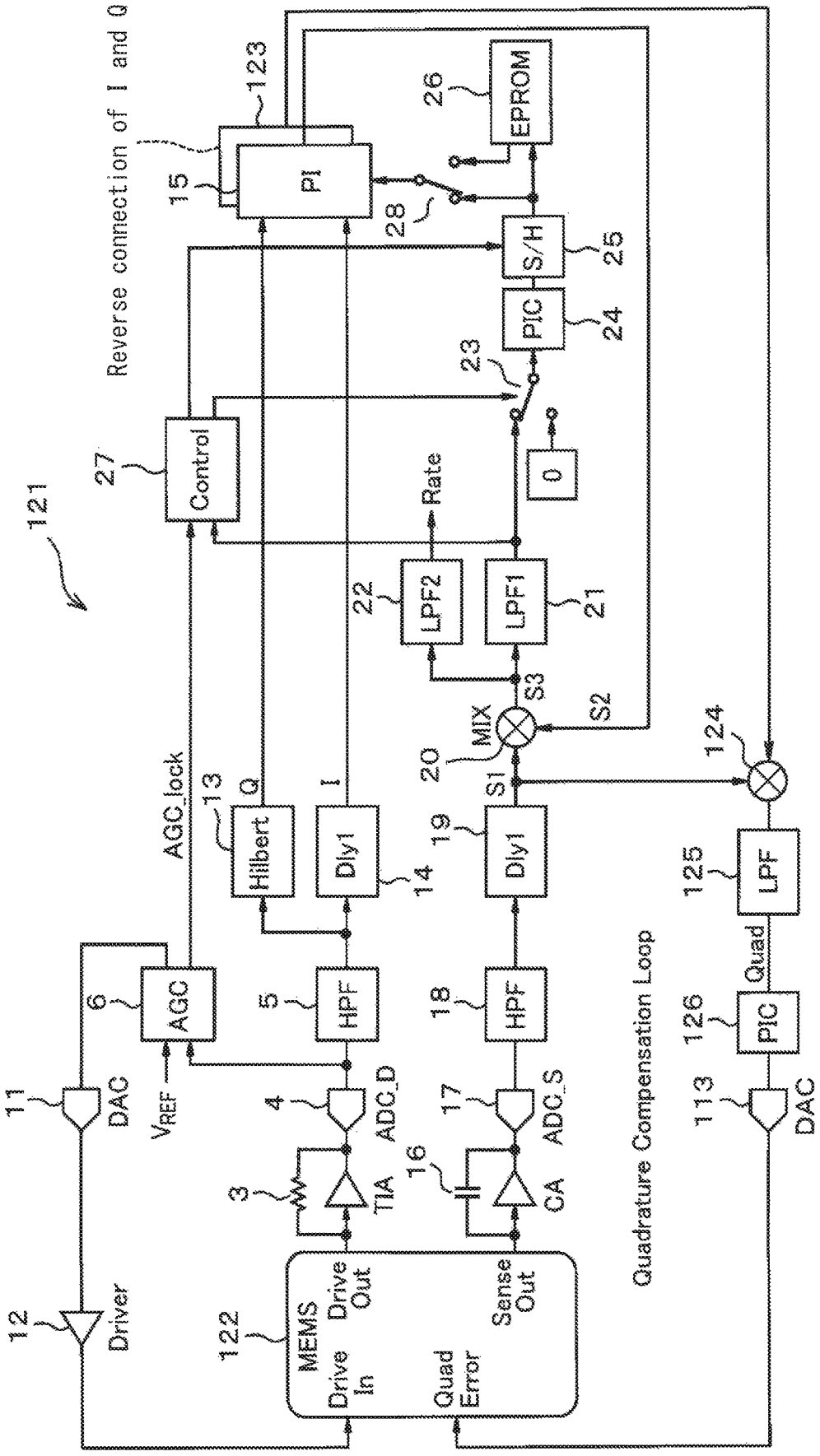
121
Reverse connection of I and Q
123
PI
15
26
EPROM
28
S/H
25
PIC
24
23
0
27
Control
Rate
22
LPF2
LPF1
21
S3
S2
MIX
20
S1
124
AGC_lock
13
Q
I
Hilbert
Dly1
14
19
Dly1
125
LPF
6
AGC
5
HPF
18
HPF
Quad
126
PIC
11
DAC
V_{REF}
4
ADC_D
17
ADC_S
113
DAC
3
TIA
16
CA
12
Driver
122
MEMS
Drive In
Drive Out
Sense Out
Quad Error
Quadrature Compensation Loop

FIG. 30

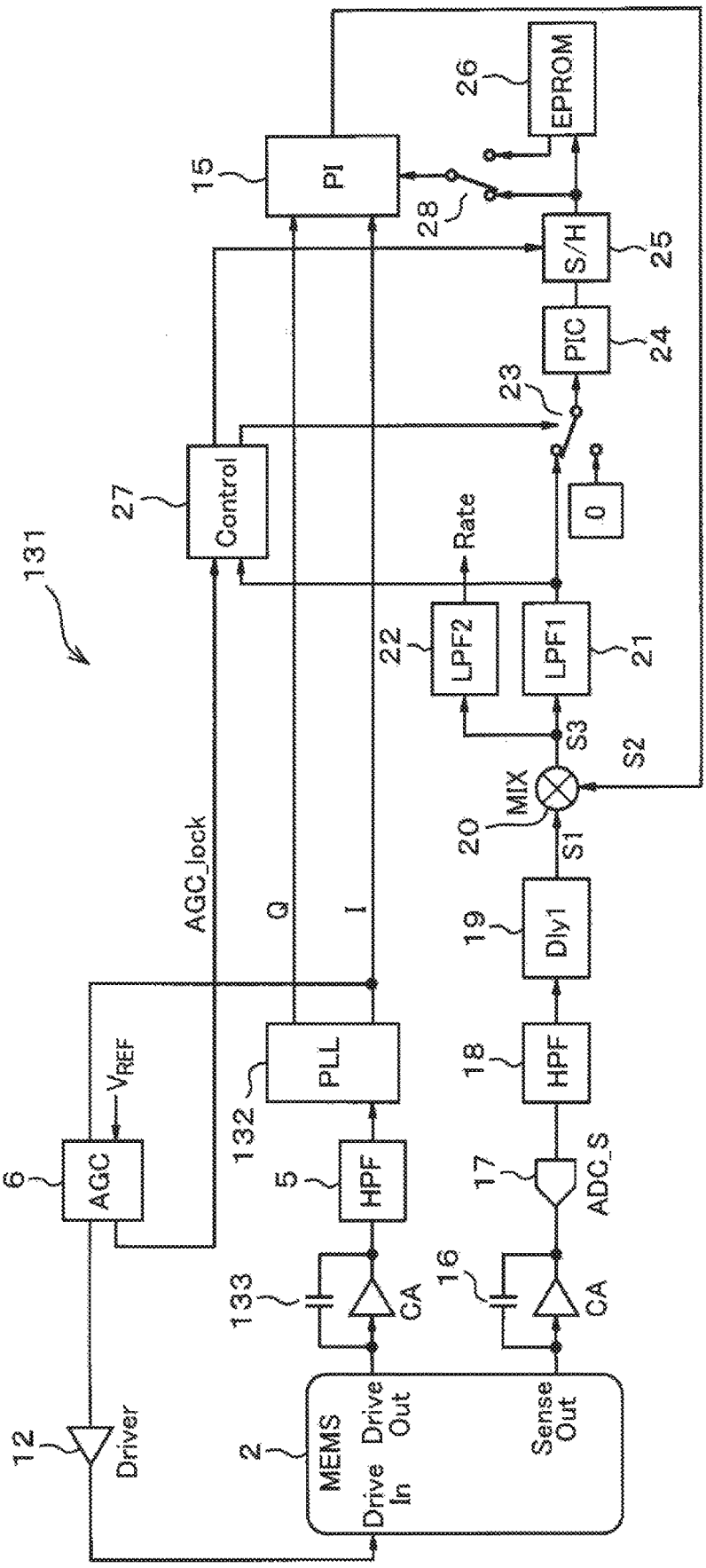
131
12
Driver
2
MEMS
Drive In
Drive Out
Sense Out
133
CA
16
CA
5
HPF
17
ADC_S
132
PLL
18
HPF
19
Dly1
20
MIX
S1
S2
S3
22
LPF2
21
LPF1
Rate
0
23
24
PIC
25
S/H
28
15
PI
26
EPROM
27
Control
AGC_lock
Q
I
6
AGC
V_{REF}

FIG. 31

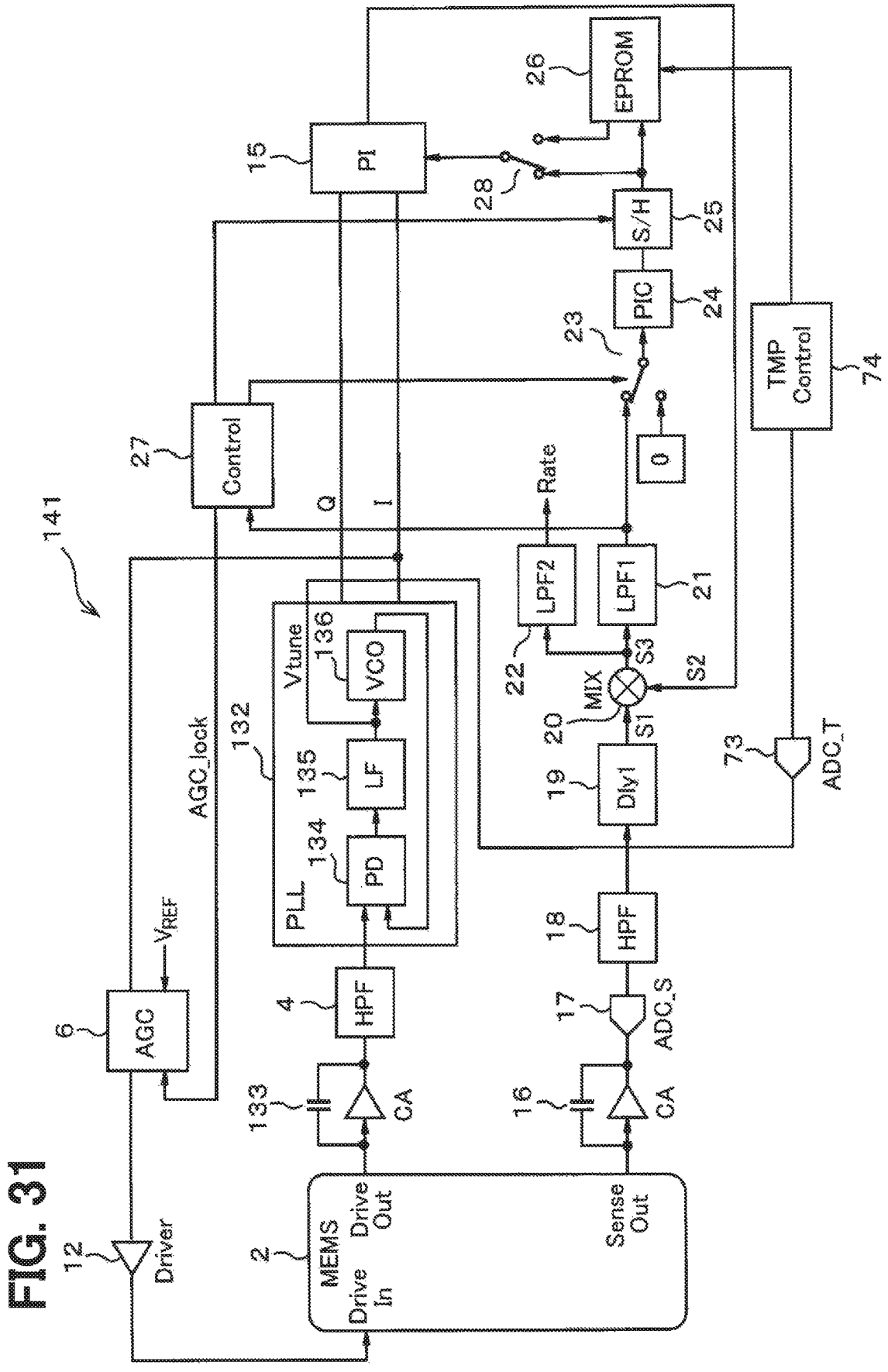
141
MEMS
Drive In
Drive Out
Sense Out
2
Driver
12
AGC
6
V_{REF}
AGC_lock
HPF
4
CA
133
PLL
PD
134
LF
135
VCO
136
Vtune
132
HPF
18
ADC_S
17
CA
16
Dly1
19
MIX
20
S1
S2
S3
LPF2
22
LPF1
21
Rate
Control
27
Q
I
PI
15
EPROM
26
S/H
25
PIC
24
23
0
TMP Control
74
ADC_T
73
28

FIG. 32

Prior art

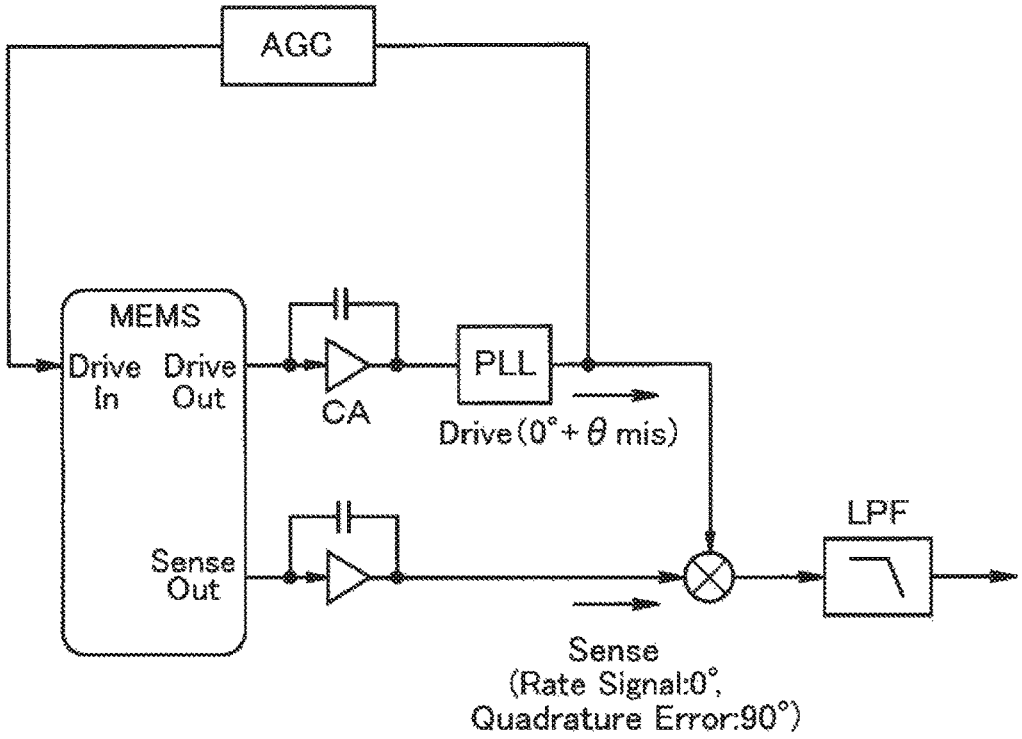

FIG. 33

Prior art

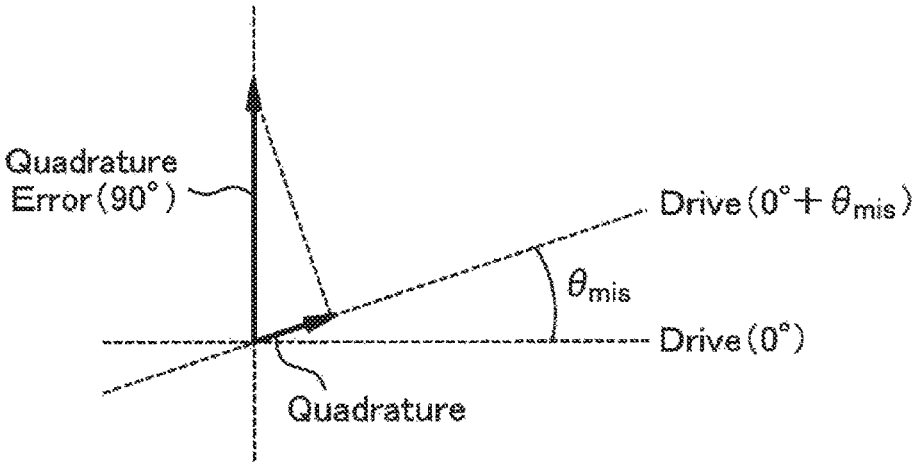

VIBRATION TYPE GYROSCOPE

CROSS REFERENCE TO RELATED APPLICATION

The present application is a continuation application of International Patent Application No. PCT/JP2019/003655 filed on Feb. 1, 2019, which designated the U.S. and claims the benefit of priority of Japanese Patent Application No. 2018-064591 filed on Mar. 29, 2018. The entire disclosures of both applications are incorporated herein by reference.

FIELD

The present disclosure relates to a MEMS vibration structure type gyroscope.

BACKGROUND

Gyroscopes of MEMS (micro electro mechanical systems) vibration structure type are widely available because they are inexpensive. However, the MEMS is likely to degrade in accuracy due to a non-ideal state caused by a manufacturing error. FIG. **32** shows, as one conventional example, a general configuration of a gyroscope of a vibrating gyro structure. Here, an open-loop architecture, in which structural parts of the MEMS includes an input terminal Drive In, an output terminal Drive Out and another output terminal Sense Out, is shown exemplarily.

A drive axis oscillation loop is formed of a CA (charge amplifier), a PLL (phase locked loop), and an AGC (automatic gain control) circuit. Since an angular velocity signal Rate generated by the Coriolis force is AM-modulated by a resonance frequency, the angular velocity signal Rate can be obtained by synchronously detecting by the drive axis signal and removing harmonic frequency components by an LPF (low pass filter).

Normally, due to a manufacturing error of the MEMS, an output signal output from the Sense Out terminal includes a quadrature error in addition to the angular velocity signal. Since the quadrature error signal is orthogonal to the angular velocity signal, it can be removed ideally by synchronously detecting a sense axis signal by the drive axis signal. However, in reality, the quadrature signal is mixed with the sensor axis signal as shown in FIG. **33** due to a phase difference θmis between the drive axis signal and the sense axis signal generated in the MEMS or the circuit. Since the quadrature error signal has a larger amplitude than that of the angular velocity signal, the signal accuracy is greatly degraded even if the phase difference is small.

To solve this problem, many techniques for correcting the phase difference θmis to zero have been proposed. For example, it is proposed for reducing a phase difference to perform a periodic phase modulation on a drive axis signal by using a phase adjustment oscillation circuit that oscillates at a frequency lower than a resonance frequency and a phase shift circuit, perform a synchronous detection, and perform a feedback of a detected signal through an integration circuit.

However, since a phase difference between a drive signal and a sense signal is always corrected, an output of a low pass filter includes an angular velocity signal, which affects a phase correction and degrades the correction accuracy. Furthermore, since no countermeasure is taken against the effect that noise generated from the circuit or the MEMS

degrades a phase correction accuracy, a high-accuracy phase correction cannot be realized.

SUMMARY

According to a vibration type gyroscope of the present disclosure, a resonator is configured by MEMS structure and has a drive signal input terminal, a drive signal output terminal and a sense signal output terminal, which outputs a sense signal corresponding to an angular velocity applied from an outside in a state modulated by a drive signal. A lock state determination unit is provided in a path extending from the drive signal output terminal to the drive signal input terminal, for stabilizing an amplitude of a drive signal output from the drive signal output terminal to be close to a reference voltage value at a time of activation and outputting a lock signal upon a determination that an amplitude variation has been stabilized. A phase shifter generates a quadrature signal by 90° phase shifting the drive signal. A phase compensator receives an in-phase signal of the drive signal, a quadrature signal and a control signal, and outputs a phase signal having a phase corresponding to the control signal based on the in-phase signal and the quadrature signal. A multiplier multiplies a modulated sense signal by the phase signal output from the phase compensator. A control low pass filter filters a multiplication result of the multiplier. A PI controller performs a proportional and integral calculation. A first multiplexer inputs an output signal of the control low pass filter or a zero level signal to the PI controller by switching. A memory stores a control signal output from the PI controller. A second multiplexer inputs either one of the control signal output from the PI controller and the control signal stored in the memory to the phase compensator. A control unit controls the first multiplexer and the second multiplexer.

BRIEF DESCRIPTION OF THE DRAWINGS

The features and advantages of the present disclosure will become more apparent from the following detailed description made with reference to the accompanying drawings. In the drawings:

FIG. **1** is a functional block diagram showing a configuration of a vibration type gyroscope according to a first embodiment;

FIG. **2** is a functional block diagram showing a configuration of an AGC circuit;

FIG. **3** is a waveform chart showing an operation of the AGC circuit;

FIG. **4** is a timing chart showing the operation of the AGC circuit;

FIG. **5** is a diagram for explaining an operation of an HPF;

FIG. **6** is a diagram for explaining an operation of an LPF;

FIG. **7** is a diagram showing a gain characteristic and a phase characteristic of the LPF;

FIG. **8** is a flowchart mainly showing an operation of a control circuit;

FIG. **9** is a diagram for explaining an influence of a phase error on a drive axis signal;

FIG. **10** is a functional block diagram showing a configuration of a vibration type gyroscope according to a second embodiment;

FIG. **11** is a functional block diagram showing a configuration of a vibration type gyroscope according to a third embodiment;

FIG. **12** is a waveform chart showing an operation of a mean circuit;

FIG. **13** is a functional block diagram showing a configuration of a vibration type gyroscope according to a fourth embodiment;

FIG. **14** is a flowchart mainly showing an operation of a control circuit;

FIG. **15** is a functional block diagram showing a configuration of a vibration type gyroscope according to a fifth embodiment;

FIG. **16** is a functional block diagram showing a configuration of an auto gain circuit;

FIG. **17** is a waveform chart explaining an operation of the auto gain circuit;

FIG. **18** is a functional block diagram showing a configuration of a vibration type gyroscope according to a sixth embodiment;

FIG. **19** is a functional block diagram showing a configuration of a vibration type gyroscope according to a seventh embodiment;

FIG. **20** is a functional block diagram showing a configuration of a vibration type gyroscope in an eighth embodiment;

FIG. **21** is a functional block diagram showing a configuration of a vibration type gyroscope according to a ninth embodiment;

FIG. **22** is a diagram for explaining an in-phase error;

FIG. **23** is a first diagram showing a equalization model of a resonator;

FIG. **24** is a second diagram showing an equalization model of a resonator;

FIG. **25** is a Bode diagram of a resonator;

FIG. **26** is a functional block diagram showing a part of a configuration of a vibration type gyroscope,

FIG. **27** is a diagram showing a result of simulating an output waveform of an averaging circuit;

FIG. **28** is a functional block diagram showing a configuration of a vibration type gyroscope according to a tenth embodiment;

FIG. **29** is a functional block diagram showing a configuration of a vibration type gyroscope according to an eleventh embodiment;

FIG. **30** is a functional block diagram showing a configuration of a vibration type gyroscope according to a twelfth embodiment;

FIG. **31** is a functional block diagram showing a configuration of a vibration type gyroscope according to a thirteenth embodiment;

FIG. **32** is a functional block diagram showing a configuration of a conventional vibration type gyroscope; and

FIG. **33** is a diagram for explaining a quadrature error.

DETAILED DESCRIPTION OF THE EMBODIMENT

First Embodiment

As shown in FIG. **1**, a vibration type gyroscope **1** of the present embodiment includes a resonator **2** made of MEMS. The resonator **2** is provided with a drive signal input terminal Drive In, a drive signal output terminal Drive Out, and a sense axis signal output terminal Sense Out. An impedance conversion amplifier indicated as a TIA (trans impedance amplifier) **3**, is connected to the output terminal Drive Out so that a capacitance change inside the resonator **2** is converted into a voltage value by the TIA **3**. The converted voltage value is converted into digital data by an A/D converter indicated as an ADC_D **4** on a drive side, and input to a high-pass filter HPF **5** and a gain adjuster indicated as an AGC circuit **6**.

As shown in FIG. **2**, the AGC circuit **6** that is a lock state determination unit includes an absolute value calculator indicated as an abs circuit **7**, a comparator **8**, a low pass filter indicated as LPF **9** and a multiplier **10**. As shown in FIG. **3**, when a drive axis signal of a resonance frequency Fd of the resonator **2** is input, the AGC circuit **6** takes its absolute value by the abs circuit **7**. The comparator **8** compares an output absolute value with a reference voltage VREF, and then the LPF **9** smoothes an output signal of the comparator **8**. This result is multiplied by the input signal, that is, the drive axis signal, by the multiplier **10** to maintain an amplitude of the drive axis signal at a constant value. Output data of the AGC circuit **6** is converted into an analog signal by a D/A converter DAC **11** and input to the input terminal Drive In of the resonator **2** via a driver **12**. The above configuration forms an oscillation loop of a drive axis. The resonance frequency Fd is, for example, about 10 kHz to 20 kHz.

Further, as shown in FIG. **4**, when the gyroscope **1** is activated, the AGC circuit **6** monitors whether an output level of the TIA **3** has converged within a range of ±Vth relative to a center level, that is, the reference voltage VREF. When the state of convergence within the above range continues for a predetermined time period TWAIT or longer, a lock signal AGC_lock is activated to a high level H. In order to improve the accuracy of phase control described later, it is important that the amplitude of the drive axis signal is constant. If a set value Vth is made small and the predetermined time period TWAIT is made long, a phase correction accuracy is improved. However, there is a trade-off that the time period required for the correction becomes long.

Output data of the HPF **5** has its phase shifted by 90° by a Hilbert conversion circuit **13**, which is a phase shifter, and a Q signal which is a quadrature signal is generated. Further, the output data becomes an in-phase signal, that is, I signal, via a first delay circuit indicated as a Dly**1** circuit **14**, which gives a delay time equal to a signal propagation delay time of the Hilbert conversion circuit **13**. The I signal and the Q signal are input to a phase compensator indicated as a PI (phase interpolator) circuit **15**. The PI circuit **15** generates a signal S**2** having an arbitrary phase based on the input I signal and Q signal and according to the applied control signal.

On the other hand, a modulated sense axis signal output from the output terminal Sense Out of the resonator **2** becomes a signal S**1** via a charge amplifier indicated as CA **16**, an ADC_S **17**, HPF **18** and a Dly**1** circuit **19** in the similar manner as the drive axis signal, and is input to a multiplier **20**. The Dly**1** circuit **19** gives the same delay time as the Dly**1** circuit **14**. The multiplier **20** outputs a signal S**3** obtained by multiplying the signal S**1** by the signal S**2** to a first low-lass filter indicated as LPF**1** **21** and a second low-pass filter indicated as LPF**2** **22**.

The LPF**2** **22** outputs an angular velocity signal Rate, which is a demodulated sense signal of the gyroscope **1**, to an outside. A cutoff frequency of the LPF**2** **22** is set higher than that of the LPF**1** **21**. The LPF**1** **21** corresponds to a control low-pass filter, and the LPF**2** **22** corresponds to an output low-pass filter.

Output data of the LPF**1** **21** is input to a sample hold circuit indicated as an S/H circuit **25** via a first multiplexer **23**, a PI controller indicated as a PIC circuit **24**, which performs proportional and integral calculation. Zero data is

given to the other input terminal of the multiplexer **23**. An output terminal of the S/H circuit **25** is connected to a write bus of an EPROM **26**, which is a memory, and is also connected to a control terminal of the PI circuit **15** via a second multiplexer **28**. The other input terminal of the multiplexer **28** is connected to a read bus of the EPROM **26**.

The lock signal AGC_lock output from the AGC circuit **6** and the output data of the LPF**1** **21** are input to a control circuit **27** that is a control unit. The control circuit **27** controls input switching of the multiplexers **23** and **27**, and also provides a trigger signal for the S/H circuit **25** to sample input data.

The circuit including the multiplier **20** to the PI circuit **15** described above has a configuration in which a negative feedback is applied so that the output of the LPF**1** **21** becomes zero. Therefore, in the present embodiment, a phase of the quadrature error signal output from the sense axis and the drive axis signal is calculated by synchronous detection in the multiplier **20** and then the phase control is performed by applying the negative feedback so that the output becomes zero, when the gyroscope **1** is in a stationary state in which the angular velocity from the outside does not act. As a result, as shown in FIG. **9**, the quadrature error θmis is canceled and the PI circuit **15** gives a phase in which the drive axis signal matches the drive axis, I axis, having a phase of 0°.

For example, by performing the above phase control in a final shipping test of the gyroscope **1**, the output result of the PIC circuit **24** at the time when the output of the LPF**1** **21** becomes close to zero is sampled and held, and its result is written in the EPROM **26**. When the gyroscope **1** is normally operated, the multiplexer **28** is switched to the read bus side of the EPROM **26** and the PI circuit **15** is controlled by the read data. Thus, optimal phase correction will be performed without needing the feedback operation performed during the test.

Here, the HPFs **5** and **18** remove flicker noise and low frequency noise arising from a DC offset. The low frequency noise included in the drive axis signal and the sense axis signal is converted to a low frequency near the zero frequency when synchronously detected in the multiplier **20**, and hence a phase lock accuracy is reduced. As shown in FIG. **5**, this low frequency noise cannot be removed by the LPF **12**. Therefore, the low frequency noise components are removed by the HPFs **5** and **18** at a stage which is immediately following after A/D conversion to improve the phase lock accuracy.

The LPF**1** **21** removes thermal noise. The signal S**2** from the PI circuit **15** contains components of a drive axis resonance frequency Fd, and the signal S**1** contains thermal noise. Therefore, as shown in FIG. **6**, the thermal noise also propagates at the output of the multiplier **20**. In order to remove this noise and realize highly accurate phase correction, it is desirable to set the cutoff frequency of the LPF**1** **21** sufficiently low. On the other hand, the LPF**2** **22** that outputs the angular velocity signal Rate to the outside determines a bandwidth of the gyroscope **1**. Therefore, in order to realize a wide band gyroscope while performing highly accurate phase correction, a cutoff frequency of the LPF**2** **22** is desirably set higher than that of the LPF**1** **21**. However, without being limited to such a setting, the LPF**2** **22** may be removed and the angular velocity signal Rate may be output to the outside from the LPF**1** **21**.

As described above, in order to improve the phase lock accuracy, it is desirable that the LPF**1** **21** has a low cutoff frequency and a high order configuration. However, this becomes a factor that reduces a phase margin. In order to secure a phase margin of 45° or more, the PIC circuit **24** is configured by a filter having a transfer characteristic (KP+KI/s).

In this case, the phase margin can be secured appropriately by setting a zero point frequency KI/KP to be lower than the cutoff frequency LPF**1** **21**. For example, FIG. **7** shows an open loop gain of the phase correction loop in case the LPF**1** **21** is configured by a second order of a time constant T. Thus, it is possible to realize a phase correction loop that removes thermal noise by a low cutoff frequency of the LPF**1** **21** to increase an S/N ratio and does not impair stability. Moreover, the DC gain is increased by the generation of a pole in DC, and the phase correction accuracy can be improved. The entire gyroscope **1** is configured by, for example, an ASIC (application specific integrated circuit).

Next, an operation of the present embodiment will be described. FIG. **8** shows processing to be performed with the gyroscope **1** being placed in a stationary state in which the angular velocity from the outside does not act. In the initial state, the zero data side is selected as the input of the multiplexer **23**. First, electric power is supplied to the gyroscope **1** to activate the drive axis oscillation loop. The AGC circuit **6** controls the amplitude of the loop (S**1**). Then, the control circuit **27** checks whether the lock signal AGC_lock input from the AGC circuit **6** becomes active, that is, H level (S**2**).

When the lock signal AGC_lock becomes active (Yes), the control circuit **27** switches the input of the multiplexer **23** to the LPF**1** **21** side and starts phase control (S**3**). When it is determined that the output level of the LPF**1** **21** is stabilized near zero (S**4**; Yes), a trigger signal is output to the S/H circuit **25** and the output data of the PIC circuit **24** at that time, that is, the final value, is held. Then, the final value is written and stored in the EPROM **26** (S**5**).

As described above, according to the present embodiment, the gyroscope **1** is configured by the resonator **2** of the MEMS structure that is provided with the input terminal Drive In, the output terminal Drive Out, and the output terminal Sense Out. The AGC circuit **6** is arranged in the path between the output terminal Drive Out to the input terminal Drive In. The AGC circuit **6** stabilizes the amplitude of the drive axis signal to the level equivalent to the reference voltage VREF when it is activated, and outputs the lock signal AGC_lock when the fluctuation of the amplitude is determined to be stabilized.

The Hilbert converter **13** generates the quadrature signal by shifting the drive axis signal by 90°. The PI circuit **15** outputs the phase signal having a phase corresponding to the control signal based on the in-phase signal I and the quadrature signal Q of the drive axis signal. The multiplier **20** multiplies the sense axis signal S**1** by the phase signal S**2** output from the PI circuit **15**. The LPF**1** **21** filters the multiplication signal S**3** and demodulates the sense signal Rate.

The control circuit **27** controls the multiplexer **23**, inputs the zero level signal to the PIC circuit **24** in the initial state. When the AGC circuit **6** outputs the lock signal AGC_lock, the control circuit **27** inputs the output signal of the LPF**1** **21** to the PIC circuit **24** and starts the phase control. When it is determined that the output signal is stabilized near zero level, the control circuit **27** finishes the phase control, and writes the control signal output from the PIC circuit **24** at that time in the EPROM **26** to be stored therein.

Thus, when performing normal sensing by the gyroscope **1**, the control circuit **27** controls the second multiplexer **28** to input the data of the control signal stored in the EPROM **26** to the PI circuit **15**. Thus, an optimum phase compen-

sation is performed so as to cancel the quadrature error θmis as shown in FIG. **9**. Further, since the output LPF**2** **22** having the cutoff frequency set higher than that of the LPF**1** **21** is provided, the bandwidth of the gyroscope **1** can be set wide without being restricted by the cutoff frequency of the LPF**1** **21**.

Second Embodiment

Hereinafter, the identical parts as those in the first embodiment will be designated by the same reference numerals for simplification of the description. Only differences from the first embodiment will be described.

As shown in FIG. **10**, a gyroscope **31** of the second embodiment has a configuration in which a second delay circuit indicated as Dly**2** **32** is inserted between the first delay circuit Dly**1** **19** and the multiplier **20**. A delay time provided by the second delay circuit Dly**2** **32** is set equal to a signal propagation delay time in the path from a point where the I and Q signals are input to the PI circuit **15** and a point where the phase signal S**2** is input to the multiplier **20**.

As a result, the delay amounts of the sense axis signal S**1** and the phase signal S**2** input to the multiplier **20** become equal, so that the PI circuit **15** only needs to correct the phase difference generated in the analog region. Since the amount of delay generated in an analog circuit such as MEMS due to temperature characteristics, manufacturing error, etc. is predictable, the phase correction range can be limited. As a result, the value range of the data output from the multiplier **20** can be limited, so that it is possible to increase the accuracy of the gyroscope **31** by allocating a larger bit length to the decimal part in a constant bit width.

Third Embodiment

In a gyroscope **41** of a third embodiment shown in FIG. **11**, a moving average circuit, that is, a mean circuit **42**, is provided between the PIC circuit **24** and the S/H circuit **25**. Further, a third multiplexer **43** is provided between the S/H circuit **25** and the EPROM **26**, and the output data of the PIC circuit **24** is directly input to the other input terminal of the multiplexer **43**. The control circuit **44** also controls switching of the multiplexer **43**.

Next, operation of the third embodiment will be described. The cutoff frequency of the LPF**1** **21** is not always set to a low value because it is restricted by the stability of the control loop and a convergence time. In such a case, the thermal noise cannot be reduced sufficiently, and the S/N ratio of the signal output from the PIC circuit **24** decreases. Therefore, in the third embodiment, by incorporating the mean circuit **42** in the phase control loop, thermal noise is reduced as shown in FIG. **12**.

However, simply incorporating the mean circuit **42** will cause a problem that the phase control loop becomes unstable because a delay of the mean circuit is large. Therefore, the mean circuit **42** concurrently calculates the moving average of the output, while the multiplexer **43** uses the output of the PIC circuit **24** during a period that the phase control loop is operating. Then, by switching to the output of the mean circuit **42** at the end of the phase control, the PI control voltage from which noise has been removed is provided. With this configuration, both stability of the control loop and high S/N ratio can be achieved, and highly reliable phase correction can be performed.

Fourth Embodiment

A gyroscope **51** of a fourth embodiment shown in FIG. **13** has a variable gain amplifier **52** provided between the LPF**1** **21** and the multiplexer **23**. The control circuit **53** controls a gain of the variable gain amplifier **52**. If the cutoff frequency of the LPF**1** **21** is lowered to reduce noise, the bandwidth of the phase correction loop is reduced, and it takes a long time to converge.

Therefore, as shown in FIG. **14**, when a control circuit **53** determines "Yes" in step S**2**, the gain of the amplifier **52** is set to a value larger than "1" for a fixed period of time counted by a counter after the start of phase control thereby to set a high band width mode, that is, HBW mode (S**11**). As a result, the bandwidth of the phase correction loop is increased, and the phase correction loop is converged early.

However, in the HBW mode, noise is also amplified, so that the convergence accuracy of the phase correction loop is reduced. Therefore, after operating in the HBW mode for a fixed time period (S**12**; Yes), the mode is switched to the LBW mode which sets the gain of the amplifier **52** to "1" (S**13**). In that state, the phase correction loop operation is finished after waiting for a fixed time period of convergence in step S**4**.

As described above, according to the fourth embodiment, it is possible to reduce the time period required for the final shipping test of the gyroscope **51** and to reduce cost.

Fifth Embodiment

A gyroscope **61** of a fifth embodiment shown in FIG. **15** includes an auto gain circuit **62**, which corresponds to a high frequency amplitude fluctuation suppression circuit, between the HPF **5** and the delay circuit **14**. As described in the first embodiment, the AGC circuit **6** has a function of keeping the amplitude of the drive axis signal constant, but cannot smooth high frequency fluctuation components.

As shown in FIG. **3**, the LPF **9** forming the AGC circuit **6** need to sufficiently lower a cutoff frequency to be smaller than 2 Fd, for example, to about 2 Fd/100, in order to suppress the double value 2 Fd of the resonance frequency. Since this defines the bandwidth of the AGC circuit **6**, fluctuation components of a frequency higher than the cutoff frequency cannot be suppressed. Therefore, in the drive axis, the noise due to the high frequency components that are not removed by the HPF **5** reaches the multiplier **20** via the PI circuit **15** and deteriorates the phase correction accuracy.

Therefore, the auto gain circuit **62** suppresses the high frequency fluctuation components included in the drive axis signal. As shown in FIG. **16**, the auto gain circuit **62** includes a peak detector circuit **63**, a mean circuit **64**, a reciprocal arithmetic circuit **65**, and a multiplier **66**. The peak detector circuit **63** detects a peak-to-peak value of the input signal amplitude. The mean circuit **64** calculates, as shown in FIG. **17**, an average value of the peak-to-peak value at a cycle of 2 Fd/10 [Hz] that is 10 times of 2 Fd/100 [Hz], to suppress frequencies higher than 2 Fd/100 [Hz] that cannot be suppressed by the AGC circuit **6**. Finally, the reciprocal arithmetic circuit **65** calculates a reciprocal of the average value, and the multiplier **66** multiplies the input signal by the reciprocal of the average value. Thereby, the amplitude fluctuation at the frequency of 2 Fd/10 [Hz] can be suppressed.

Sixth Embodiment

A gyroscope **71** of a sixth embodiment shown in FIG. **18** includes a temperature sensor **72**, an A/D converter ADC_T **73**, and a temperature control circuit **74** corresponding to a temperature compensation control unit. The temperature sensor **72** may be arranged inside the same ASIC as the

gyroscope **71** or outside thereof. Since the phase characteristics of the MEMS structure and analog circuits have temperature dependence, the phase difference between the drive axis and the sense axis has temperature dependence.

Therefore, at the time of the final shipping test, the gyroscope **71** is operated at various temperatures to create a plurality of phase correction value tables in correspondence to temperature conditions, and such phase correction tables are stored in the EPROM **26**. Thus it is possible to perform a phase correction having no temperature dependence. That is, the temperature condition for each phase correction value table is also written in the EPROM **26** as a control signal by the temperature control circuit **74**.

Seventh Embodiment

A gyroscope **81** according to a seventh embodiment shown in FIG. **19** includes a slicer circuit **82** formed of, for example, a comparator provided between the PI circuit **15** and the multiplier **20**. The data output from the PI circuit **15** is a sine wave. The amplitude noise included in the sine wave is a factor that causes noise in the output signal S**3** of the multiplier **20**. Therefore, the sine wave is converted into a rectangular wave having a binary level "1" or "0" by the slicer circuit **82** to reduce the amplitude noise. Even if it is converted into the rectangular wave, the frequency information of the drive axis signal is not lost, so the phase correction accuracy is not degraded. Further, with this configuration, the circuit scale of the multiplier **20** can be reduced, so that more accurate and low-cost phase correction can be realized.

Eighth Embodiment

A gyroscope **91** of an eighth embodiment shown in FIG. **20** includes a self-diagnosis circuit **92** having two input terminals connected to input terminal of the multiplexer **28**, respectively. The configurations of the respective embodiments described above assume that the phase control is performed in an environment in which the gyroscope is held stationary when the product is shipped. However, the state of the gyroscope may change from the state at the time of shipment due to deterioration of the MEMS structure or circuit over time, damage in the use environment, or the like.

Therefore, in the eighth embodiment, the gyroscope **91** is provided with a self-diagnosis mode thereby to detect the abnormality by using the self-diagnosis circuit **92** formed of a subtractor. In the self-diagnosis mode, the gyroscope **91** is operated in a stationary state with no angular velocity applied, as in the case of the test before shipping the product. Then, the self-diagnosis circuit **92** compares the table value written in the EPROM **26** at the time of the shipping test and the data output from the PIC circuit **24** at the time of the self-diagnosis mode. When the difference between the compared two data exceeds a determination threshold value, the self-diagnosis circuit **92** detects that an abnormality has occurred in the gyroscope **91** and outputs an abnormality detection signal to the outside.

That is, according to the eighth embodiment, the abnormality of the gyroscope **91** can be detected based on a secular change of the control signal output from the PIC circuit **24**.

Ninth Embodiment

According to one conventional publication, Y. Zhao et al, "Effect of stress on split mode gyroscope bias: An experimental study," in Proc. Int. Conf. Solid-State Sens. Actuators (TRANSDUCERS), June. 2017, pp. 1041-1044, in-phase noise, that is, in-phase error, occurs in addition to the quadrature error in the output of the sense axis. This error arises because a driving force of the drive axis leaks to the sense axis side due to a gap shape mismatch of an electrostatic MEMS, and is an error in the same phase as the angular velocity signal. If the in-phase error has a strength that is not negligible, the gyroscope of the embodiment will perform incorrect phase correction.

As shown in FIG. **22**, in case the signal output from the output terminal Drive Out of the drive axis includes the in-phase error, the error is a sum with the quadrature error and results in Drive Out shown in the Figure. The phase correction of the embodiment controls the phase so as to be orthogonal to this error signal. As a result, the phase of the corrected drive axis signal S**2** becomes (0°+θCOR), does not become a signal orthogonal to the quadrature error, and the angular velocity signal Rate remains mixed with the quadrature error. The quadrature error signal has a large amplitude. I the amplitude changes with a change in temperature or package stress, it has a great influence on the output of the sense axis. Therefore, it is desirable to remove the quadrature error from the angular velocity signal as much as possible.

In a gyroscope **101** of a ninth embodiment shown in FIG. **21**, adders **102** and **103** are arranged on the output sides of the LPFs **21** and **22**, and a fixed value corresponding to an amplitude of an in-phase error signal is set in an offset register **104** thereby to remove a common mode error. As shown in FIG. **22**, when the amplitude of the in-phase error signal is A**0**, −A**0** is set in the offset register **104**.

Since the input value of the PIC circuit **24** is converged to zero in the phase control of the embodiment, the output of the LPF**1** **21** is converged to +A**0**. At this time, the phase of the signal S**2** becomes Drive (0°), and a signal orthogonal to the quadrature error signal is obtained. Here, the amplitude of the in-phase error may be determined by the theoretical formula described in the above-referred publication of Y. Zhao et al and the simulation of the MEMS structure. It is also possible to actually measure it as described below.

FIG. **23** and FIG. **24** show equalization models from the input terminal Drive In to the output terminal Sense Out of the MEMS resonator **2**. The drive axis and the sense axis each have a unique mass-spring-damper system. Here, "m" is a mass, "Q" is an input angular velocity, and "Kyx" is a conversion coefficient for converting the drive axis displacement that causes the quadrature error to the drive force of the sense axis. "α" is a coefficient for transmitting the in-phase error. and the in-phase error propagates to the sense axis side without passing through the mass-spring-damper system of the drive axis.

Further, as shown in FIG. **25**, the drive axis has no gain at frequencies other than the resonance frequency. By utilizing this characteristic, the strength of the in-phase error can be measured by inputting the signal of the frequency at which the in phase error is dominant in the output terminal Sense Out to the input terminal Drive In and monitoring the output of the output terminal Sense Out. In the example shown in FIG. **26**, a frequency Fd/10, that is −60 dB lower than the gain of the resonance frequency Fd, is selected. It is noted that FIG. **24** is shown in the above-referred publication of Y. Zhao et al.

Here, since the in-phase signal is minute, it is easily buried in other noise. Therefore, the noise intensity is reduced by averaging the signals and the intensity of the in-phase signal is measured. Here, since the drive frequency

is known, the sense axis signal is integrated at this frequency. As shown in FIG. **26**, a test drive circuit **105** is connected to the input side of the DAC **11**. If the frequency Fd is 10 kHz (Fd=10 kHz), a sine wave having a frequency of 1 kHz is input as a test signal for 2^{10} cycles. Further, an averaging circuit **106** is arranged on the output side of the HPF **18**. The output signals are integrated in 2^{10} cycles. The averaging circuit **106** corresponds to an integrator.

FIG. **27** shows a result of simulating an output waveform of the averaging circuit **106**. A Cal circuit **107** corrects a difference in gain between the frequency Fd/10 and the frequency Fd on the sense axis with respect to a value A**1** obtained as an integration result. The Cal circuit **107** corresponds to a gain correction unit. That is, a value obtained by amplifying an integrated value A**1** with a gain of 60 dB is set in an offset register **104** shown in FIG. **21**. The circuits **105** to **107** may be connected only at the time of product shipping test, or may be permanently installed in the gyroscope **101** and used by switching paths.

As described above, according to the ninth embodiment, the test drive circuit **105**, the averaging circuit **106** and the Cal circuit **107** are provided. The test drive circuit **105** drives the sensor with the test signal having the frequency lower than the resonance frequency Fd of the resonator **2**. The averaging circuit **106** integrates the sense axis signal S**1** at a cycle period of the test signal for a predetermined time. The Cal circuit **107** corrects the integration result of the averaging circuit **106** in correspondence to the difference in gain due to the difference between the resonance frequency and the test signal frequency. Then, by setting the correction result of the Cal circuit **107** in the Offset register **104**, this offset is given to the adders **102** and **103**. This makes it possible to cancel the in-phase error and improve the phase correction accuracy.

Tenth Embodiment

A gyroscope **111** of a tenth embodiment shown in FIG. **28** includes a resonator **112** that replaces the resonator **2**. The resonator **112** has an input terminal Sense In on the sense axis side, and employs a force rebalance loop architecture that performs feedback control to stop displacement of the sense axis. In correspondence to this architecture, the angular velocity signal Rate output from the LPF**2** **22** is input to the input terminal Sense In via a DAC **113** in the gyroscope **111**.

First, a correct phase correction amount is detected by activating the phase correction loop of the first embodiment, for example, while stopping the force rebalance loop. Then, the force rebalance loop is activated to operate the two loops without interfering with each other. As a result, it is possible to realize a highly accurate sensor that is unlikely to be affected by variations due to the quadrature error by feedback controlling the resonator **112** at the appropriate phase.

Eleventh Embodiment

A gyroscope **121** of an eleventh embodiment shown in FIG. **29** includes a resonator **122** that replaces the resonator **2**. The resonator **122** has a quadrature error compensation loop including an input terminal Quad Error. The quadrature error correction loop is a loop for minimizing the quadrature error. In correspondence to this, the gyroscope **121** includes another PI circuit **123** in addition to the PI circuit **15**. For the PI circuit **123**, the I signal and the Q signal applied to the input terminals are reversed. The multiplier **124** multiplies the signal S**1** by the output signal of the PI circuit **123**, and inputs a multiplication result to the input terminal Quad Error via an LPF **125**, a PIC **126**, and a DAC **113**.

Similarly to the tenth embodiment, the quadrature error correction loop is stopped first and the phase correction loop is operated to obtain the phase correction value. Since the multiplier **124** synchronously detects the sense axis signal S**1** by the output signal of the PI circuit **123**, the quadrature error signal is obtained. After the phase correction loop has converged, the quadrature error correction loop is operated for convergence. This allows the two loops to operate without interfering with each other as in the tenth embodiment. As described above, according to the eleventh embodiment, the quadrature error can be corrected more accurately in the gyroscope **121** having the quadrature error correction loop.

Twelfth Embodiment

A gyroscope **131** of a twelfth embodiment shown in FIG. **30** uses a PLL circuit **132** as a 90° phase shifter instead of the Hilbert conversion circuit **13**. Along with this, the TIA**3** is replaced with a CA **133** and the ADC_D**4** is removed. In this configuration, by narrowing a bandwidth of the PLL circuit **132**, it can be used as a bandpass filter BPF. As a result, the noise contained in the drive axis can be reduced and the phase compensation accuracy can be improved.

Thirteenth Embodiment

A gyroscope **141** of a thirteenth embodiment shown in FIG. **31** is a combination of the sixth and twelfth embodiments. In place of the temperature sensor **72** of the sixth embodiment, the PLL circuit **132** of the twelfth embodiment is used as a temperature sensor. The PLL circuit **132** includes a phase comparator PD **134**, a loop filter LF **135**, and a voltage-controlled oscillator VCO **136**. The control voltage of the VCO **136** is input to the ADC_T**73** as a signal Vtune. The control voltage Vtune can be regarded as a value obtained by converting the resonance frequency of the resonator **2** into a voltage. Since the resonance frequency has temperature dependence, it can be used as a temperature sensor.

Other Embodiment

The specific numerical value of the frequency may be appropriately changed according to the individual design.

The respective embodiments may be appropriately combined for implementation.

The memory is not limited to the EPROM **26**, but may be a flash ROM, an EEPROM, an SRAM, or the like.

In the fourth embodiment, the value of each gain in the HBW mode and the LBW mode may be appropriately set without departing from the spirit of the invention.

While the present disclosure has been described with reference to embodiments thereof, it is to be understood that the disclosure is not limited to the embodiments and constructions described above. The present disclosure covers various modification examples and equivalent arrangements. In addition, various combinations and forms, and further, other combinations and forms including only one element, or more or less than these elements are also within the scope of the present disclosure.

What is claimed is:

1. A vibration type gyroscope comprising:

a resonator configured by MEMS structure and having a drive signal input terminal, a drive signal output ter-

minal and a sense signal output terminal, which outputs a sense signal corresponding to an angular velocity applied from an outside in a state modulated by a drive signal;

a lock state determination unit, provided in a path extending from the drive signal output terminal to the drive signal input terminal, for stabilizing an amplitude of a drive signal output from the drive signal output terminal to be close to a reference voltage value at a time of activation and outputting a lock signal upon a determination that an amplitude variation has been stabilized;

a phase shifter for generating a quadrature signal by 90° phase shifting the drive signal;

a phase compensator for receiving an in-phase signal of the drive signal, the quadrature signal and a control signal, and outputting a phase signal having a phase corresponding to the control signal based on the in-phase signal and the quadrature signal;

a multiplier for multiplying a modulated sense signal by the phase signal output from the phase compensator;

a control low pass filter for filtering a multiplication result of the multiplier;

a proportional-integral (PI) controller for performing a proportional and integral calculation;

a first multiplexer for inputting an output signal of the control low pass filter or a zero level signal to the PI controller by switching;

a memory for storing a control signal output from the PI controller;

a second multiplexer for inputting either one of the control signal output from the PI controller and the control signal stored in the memory to the phase compensator; and

a control unit configured to input the zero level signal to the PI controller in an initial state by controlling the first multiplexer, start a phase control by inputting an output signal of the low pass filter to the PI controller when the lock state determination unit outputs the lock signal, and finish the phase control upon the determination that the output signal has been stabilized near a zero level, and writes the control signal output from the PI controller at a determination time of stabilization so that the control signal is stored in the memory.

2. The vibration type gyroscope according to claim **1**, wherein:

the phase shifter is a Hilbert conversion circuit.

3. The vibration type gyroscope according to claim **1**, further comprising:

a slicer for converting the output signal of the phase compensator into a digital signal.

4. The vibration type gyroscope according to claim **1**, wherein:

the phase shifter is a phase locked loop (PLL) circuit.

5. The vibration type gyroscope according to claim **4**, further comprising:

a temperature compensation control unit for generating, in a correction mode, a phase correction table by storing the control signal in the memory based on the output signal of a low pass filter forming the PLL circuit, and performing, in a normal mode, temperature compensation processing by reading out control signal data from the phase correction table.

6. The vibration type gyroscope according to claim **1**, further comprising:

an output low pass filter for filtering the multiplication result of the multiplier and having a cutoff frequency set higher than that of the control low pass filter.

7. The vibration type gyroscope according to claim **1**, further comprising:

a delay circuit, provided in a signal path extending from the sense signal output terminal to the multiplier, for giving a delay time generated in a signal path extending from the phase compensator to the multiplier.

8. The vibration type gyroscope according to claim **1**, further comprising:

a moving average circuit for calculating a moving average of the control signal output from the PI controller; and

a third multiplexer for selecting and outputting either one of an output signal of the moving average circuit and the control signal,

wherein the control unit controls the third multiplexer to select the control signal during performing the phase control and select the output signal of the moving average circuit when the phase control is finished.

9. The vibration type gyroscope according to claim **1**, further comprising:

an amplifier provided between the control low pass filter and the first multiplexer and capable of varying a gain,

wherein the control unit sets the gain at a predetermined gain until a fixed time elapses from starting the phase control and lowers the gain after the fixed time has elapsed.

10. The vibration type gyroscope according to claim **1**, further comprising:

a high frequency band amplitude variation suppression circuit provided in a signal path extending from the drive signal output terminal to the phase shifter, wherein the high frequency amplitude variation suppression circuit includes:

a peak value detection circuit for detecting a peak-to-peak value of the amplitude of the drive signal;

a moving average circuit for calculating a moving average of an output signal of the peak value detection circuit;

a reciprocal circuit for calculating a reciprocal of an output signal of the moving average circuit; and

a multiplier for multiplying the drive signal by an output signal of the reciprocal circuit.

11. The vibration type gyroscope according to claim **1**, further comprising:

a temperature sensor for detecting a temperature of the resonator; and

a temperature compensation control unit for generating, in a correction mode, a phase correction table by storing a control signal in the memory based on the temperature, and performing, in a normal mode, temperature compensation processing by reading out control signal data from the phase correction table based on a detected temperature.

12. The vibration type gyroscope according to claim **1**, further comprising:

a determination unit for determining an abnormality by comparing the control signal output from the PI controller and the control signal stored in the memory.

13. The vibration type gyroscope according to claim **1**, further comprising:

an offset circuit for giving an offset to an output signal of the control low pass filter thereby to cancel an in-phase error component included in a sense signal output from the resonator.

14. The vibration type gyroscope according to claim **13**, further comprising:

a test drive circuit for driving the resonator by a test signal of a frequency lower than a resonance frequency of the resonator;

an integrator for integrating the sense signal at a cycle period of the test signal for a fixed time; and

a gain correction unit for correcting an integration result of the integrator based on a gain difference caused by a difference between the resonance frequency and the frequency of the test signal,

wherein the offset circuit sets the offset to a correction result of the gain correction unit.

15. The vibration type gyroscope according to claim **1**, further comprising:

a feedback low pass filter for feeding back a filtered output signal of the multiplier to a sense signal input terminal of the resonator in a feedback loop architecture for suppressing fluctuation of the sense signal.

16. The vibration type gyroscope according to claim **1**, further comprising:

a second phase compensator having input terminals for receiving an in-phase signal and an out-phase signal in a manner opposite to a signal input relation of a first phase compensator provided as the phase compensator of claim **1**, in a feedback loop architecture for compensating the quadrature error;

a multiplier for multiplying the sense signal by an output signal of the second phase compensator;

a feedback low pass filter for filtering an output signal of the multiplier; and

another proportional-integral (PI) controller for performing proportional and integral calculations on an output signal of the feedback low pass filter and inputting a control result to a quadrature error signal input terminal of the resonator.

* * * * *