2 Sheets—Sheet 1.

S. DODSON.

GRAIN DECORTICATOR.

No. 169,426. Patented Nov. 2, 1875.

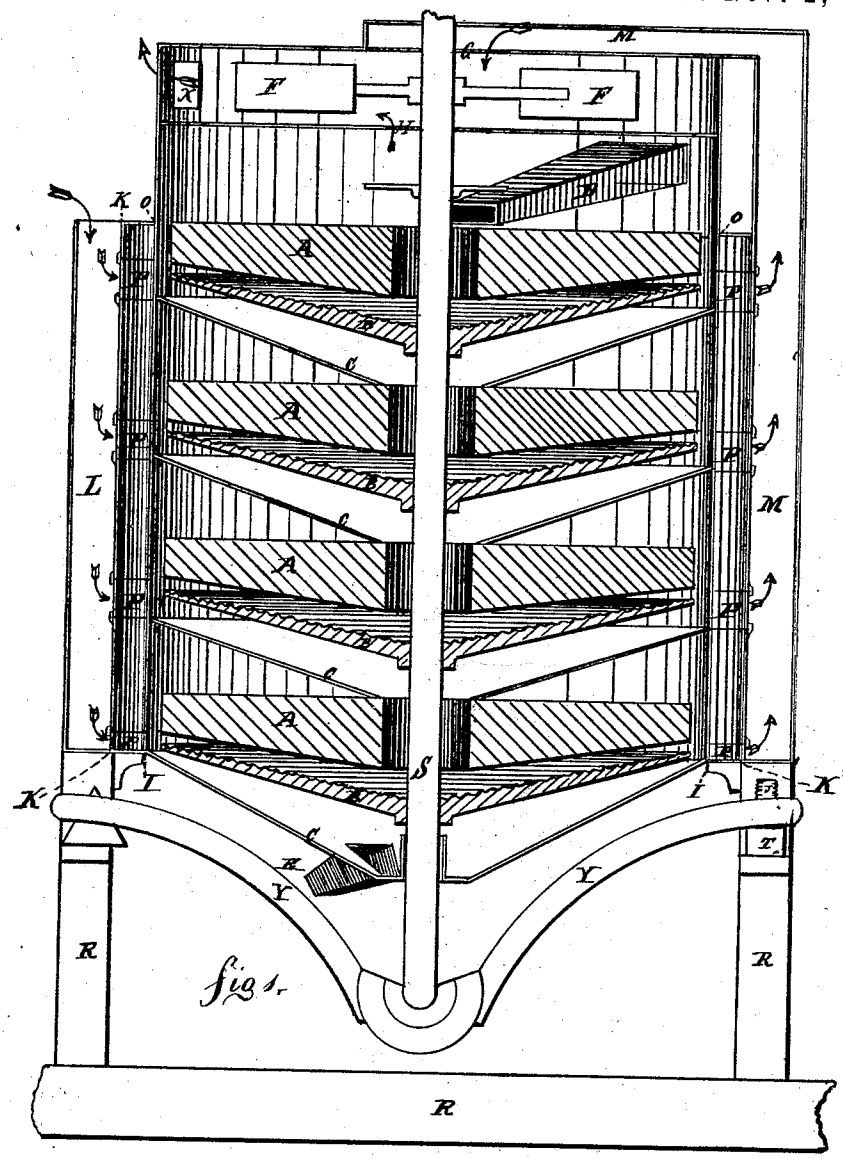

fig 1.

Witnesses:

G. E. Palmer

A. Mandeville

Inventor:

Silas Dodson

N. PETERS, PHOTO-LITHOGRAPHER, WASHINGTON, D. C.

2 Sheets—Sheet 2.

S. DODSON.

GRAIN DECORTICATOR.

No. 169,426. Patented Nov. 2, 1875.

Fig 2.

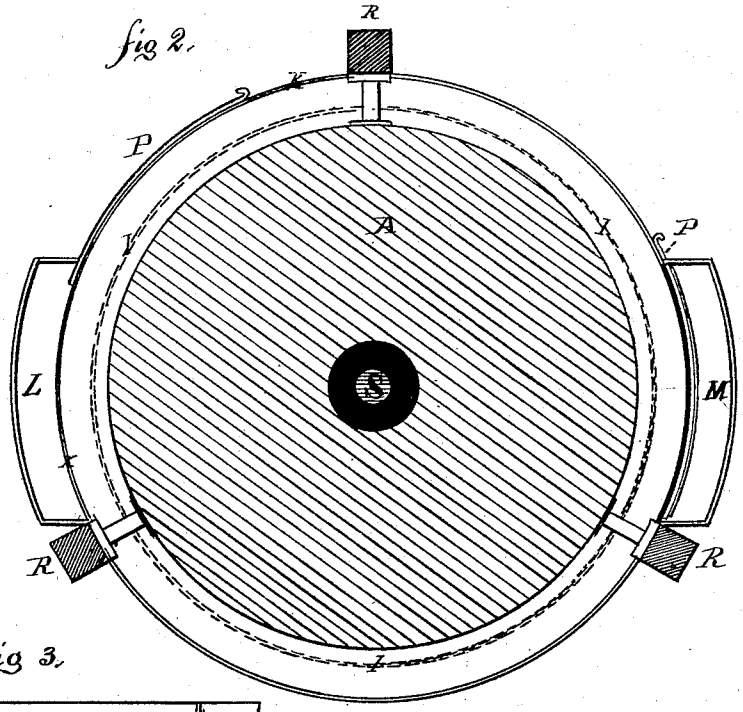

Fig 3.

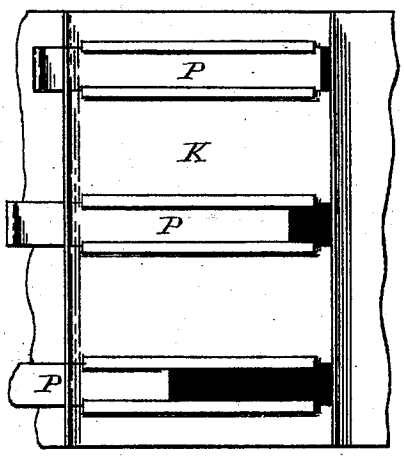

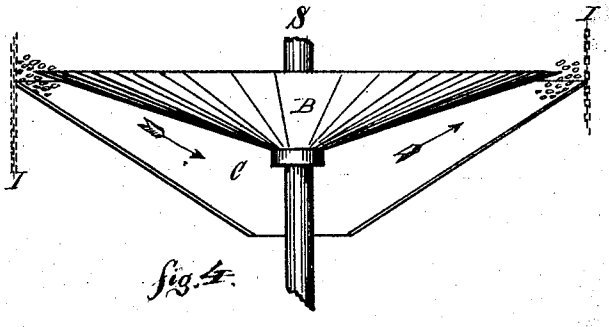

Fig 4.

Witnesses:

G. E. Palmer

A. Mandeville

Inventor:

Silas Dodson

N. PETERS, PHOTO-LITHOGRAPHER, WASHINGTON, D. C.

UNITED STATES PATENT OFFICE.

SILAS DODSON, OF ROCHESTER, NEW YORK.

IMPROVEMENT IN GRAIN-DECORTICATORS.

Specification forming part of Letters Patent No. **169,426**, dated November 2, 1875; application filed April 15, 1875.

To all whom it may concern:

Be it known that I, SILAS DODSON, of Rochester, in the county of Monroe and State of New York, have invented certain new and useful Improvements in Machinery for Decorticating Grain, of which the following is a specification:

My invention relates to that class of machines in which the grain is decorticated by being thrown, by centrifugal motion, forcibly against a motionless grit or sandstone surface; and the improvements I have made therein consist in the features of construction and combination hereinafter described and claimed.

In the accompanying drawings, Figure 1 represents a vertical cross-sectional view of a decorticator embracing my invention. Fig. 2 represents a horizontal cross-section of the same at the surface of one of the stones. Fig. 3 is an elevation of the interior surface of one of the air-passages L M, showing the adjustable dampers P and their attendant openings. Fig. 4 is a detached view of the disk B and hopper C.

Within a frame-work, R R R, a suitable number of circular stones, A A, are fixed. The lower surfaces of these stones are dressed, to afford them a pitch from the center upward to the periphery of about ten degrees, and they are further provided with central openings of a size to admit of the free passage of the grain through them, and around the vertical shaft. Upon a vertical shaft, S, are fixed, beneath each stone, cast-metal disks B, their upper surfaces bearing a general pitch of about twice the number of degrees given the lower face of the stone. This face is ridged, ringed, or otherwise roughened, to prevent the too rapid travel of the grain to its circumference. Affixed to the upper surface of each stone, below the upper one, is a hopper, with its periphery abutting against the circular gauze jacket I, to receive the overflow of grain from the disk B, and conduct it to the center of the next stone A. Surrounding the stones, disks, and hopper is a wire-gauze jacket, I, and at a proper distance from this, and inclosing an annular air-space, is a solid jacket of sheet metal, K, fitted on opposite sides with inclosed air-passages L M—the passage L for the admission of the air open at the top, the passage M opening into the top of the fan-case. At points on the inner surface of these air-passages, approximating to the openings between each disk and stone, are arranged openings fitted with adjustable covers or dampers P. The air is supplied through the dampers P in the passage L, drawn across to the dampers P in M, carrying with it the dust. In a continuation of the casing, extending upward above the stone A, is placed a fan, F, suitably incased, the case provided with a central opening from the passage M for the admission of air, and an opening, X, for its exit. D is a flume, for conducting the grain to the first stone, and E another, for its final passage from the machine. Y is the yoke upon which the shaft S rests, and is adjustable by means of the nut T and screw J. The arrows show the direction of the air to and from the fan.

I am aware that machines for this or a similar purpose have been constructed having stationary hoppers; also, that the application of concentric ridges to a dished disk is not new; also, that the decortication of grain by its continued forcible propulsion against a surface of stone or grit, whether permanent or in motion, is an old and well-known means of application. But in the cases coming under my knowledge the ridged disks have been stationary, and, in some instances, fitted with perforations in the bottoms of the ridges for the passage of grain or the admission of air; therefore I do not claim these.

I am also aware that it has been proposed to employ fixed and revolving stone and metallic surfaces in such juxtaposition that they should have a scouring effect on the grain by a rubbing or frictional action, so as thereby to loosen and remove the smut and dust; but in the decorticating of grain or removing the outer cuticle and refuse ends by the forcible stroke, blow, or impact of the berry against a stone face, a different operation is carried on, and a different effect produced. Hence, I arrange my adjacent operative surfaces at such distance apart that the grain will not be rubbed between the two, but will be forcibly hurled or thrown from one to and against the other.

I claim—

1. In a machine for decorticating grain, the

combination of a non-revolving stone A and cast-metal annularly-ribbed revolving disk B, relatively arranged substantially as set forth, whereby the grain shall be subjected to a percussive action on the stone, as distinguished from a rubbing action between the stone and disk.

2. A non-revolving grain-decorticating stone, A, dressed on its lower operative face to the form of an inverted frustum of a cone, in combination with the revolving disk B, made with a pitch in its upper face in excess of that of the operative face of the stone, substantially as set forth.

3. In combination with the jackets I and K, air-passages L and M, and the inclosed stones, disks, and hoppers, and the fan F, the openings into the air-passages L and M, with their adjustable covers or dampers P, as shown and described.

SILAS DODSON.

Witnesses:
G. E. PALMER,
A. MANDEVILLE.