(19) NL Octrooicentrum

(11) 2006348

(12) C OCTROOI

(21) Aanvraagnummer: **2006348**

(22) Aanvraag ingediend: **07.03.2011**

(51) Int.Cl.:
F16L 59/02 (2006.01) *F16L 59/14* (2006.01)

(43) Aanvraag gepubliceerd:
-

(47) Octrooi verleend:
10.09.2012

(45) Octrooischrift uitgegeven:
19.09.2012

(73) Octrooihouder(s):
RNS Technologies B.V. te Landsmeer.

(72) Uitvinder(s):
Petrus Antonius Vermont te Landsmeer.
Walter John Chappas
te Raleigh, North Carolina (US).

(74) Gemachtigde:
ir. M. Cramwinckel te Den Haag.

(54) **Insulation composition.**

(57) The invention is directed to en insulation composition comprising the following layers (a) a hydrophobic, moisture permeable layer composed of a woven, non-woven, or knit fibrous material, (b) a hydrophilic wicking layer, (c) an insulation material layer. The invention is also directed to a method to remove water from an insulated metal transport conduit comprising a metal transport conduit and the insulation composition, wherein the insulation composition further comprises of a layer (b1) of a high void material, by supplying a stream of gas to the layer of high void material at a first point and discharging a stream of the gas and any water picked up from the high void material at a second point. The invention is also directed to a method to detect and locate liquid water in the insulation composition positioned around a metal transport conduit wherein the method is performed by measuring the local electric conductivity in the wicking material.

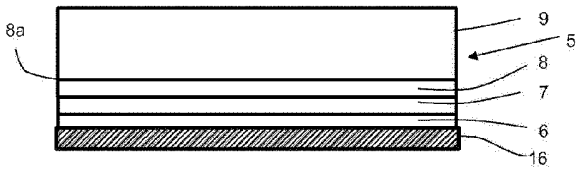

NL C 2006348

Dit octrooi is verleend ongeacht het bijgevoegde resultaat van het onderzoek naar de stand van de techniek en schriftelijke opinie. Het octrooischrift komt overeen met de oorspronkelijk ingediende stukken.

INSULATION COMPOSITION

FIELD OF THE INVENTION

The invention is directed to an insulation composition comprising a wicking layer and an insulation layer.

BACKGROUND OF THE INVENTION

Corrosion under insulation (CUI) is corrosion that develops over time beneath thermal insulation used on pipes, tanks and other manufacturing and process equipment. Wherever piping, tanks or equipment are thermally insulated, there is potential for CUI. It is usually caused by condensation, rainwater, cleaning fluids, etc., that permeate into the insulation and attack the metal surface of the above equipment. Regardless of how securely insulation materials are applied to a substrate material, there will inevitably be areas where water can seep in, thereby creating conditions that subsequently causes corrosion and damage to the metal surface. As a consequence of the above, CUI may occur at any location and time, even at locations or under conditions which are initially regarded as less likely or even non-likely to experience corrosion.

Various publications are directed to insulation compositions or methods which aim at reducing the content of water in said insulation composition.

JP2002181280 describes a method wherein through the insulation material wound around a pipe a gas of a temperature different from ordinary temperature in the inner part is passed. This gas picks up the water which is discharged at another point.

WO 91/18237 describes an insulation system comprising a layer of a heat insulating material for a conduit or container having a surface temperature below the dew point of the ambient air and in particular an insulating system for insulating cold pipes and conduits and containers for the transportation or storage of cooling media. The insulating system has layers of a hygroscopic wicking material on both sides of a thermally insulating material which is adapted to be arranged round a pipe. The two layers communicate with each other

through an opening in the thermally insulating material, whereby condensate by capillary action can be transported from the inner layer to the outer layer.

WO 95/19523 describes an insulation around a pipe wherein strips of an hydroscopic material are equidistantly spaced from each other along the length of the pipe. The strips extend from a direct contact with the metal surface to the outside of the insulation where it is exposed to the ambient air and forms an evaporation surface.

A common feature of the prior-art solutions exemplified by WO 91/18237 and WO 95/19523 to the problem with removing of condensate is that a hygroscopic material is arranged on the metal surface on which condensate is formed. Another common feature is that the hygroscopic material is brought into direct contact with the ambient air.

A problem with the above insulation compositions is that either water is only removed locally in case strips are used. In case a wicking layer totally covers the metal layer corrosion may still take place, especially when the metal surface has a relatively high temperature. Such high temperature metal surfaces are for example encountered in transport conduits for steam.

SUMMARY OF THE INVENTION

The invention is directed to an insulation composition comprising the following layers

(a) a hydrophobic, moisture permeable layer composed of a woven, non-woven, or knit fibrous material,

(b) a hydrophilic wicking layer

(c) an insulation material layer

The invention is also directed to an insulated metal transport conduit comprising a metal transport conduit and insulation composition as described above.

Applicants found that by using insulation composition as above water is less likely to accumulate on the surface of the metal transport conduit and as a consequence corrosion of the metal surface is further avoided.

The invention is also directed to a method to remove water from an insulated metal transport conduit comprising a metal transport conduit and an insulation composition wherein the insulation composition comprises of a layer (b1) of a high void material by supplying a stream of gas to the layer of high void material at a first point and discharging a stream of the gas and any water picked up from the high void material at a second point.

The invention is also directed to a composition comprising the following layers

(a) a hydrophobic, moisture permeable layer composed of a woven, non-woven, or knit fibrous material,

(b) a hydrophilic wicking layer, and

a layer (b1) of a high void material.

The invention is also directed to a method to detect and locate liquid water in an insulation composition positioned around a metal transport conduit wherein the insulation composition comprises of a layer of wicking material and wherein the layer of wicking material comprises measuring means to measure the presence of liquid water.

The invention is also directed to an insulated metal transport conduit comprising a metal transport conduit, an insulation composition and a cover sheet (e), wherein between insulation composition and cover sheet (e) a layer (d) of high void material is present.

BRIEF DESCRIPTION OF DRAWINGS

Figure 1 is an insulation composition according to the invention.

Figure 2 is a preferred insulation composition according to the invention.

Figure 3 is a next preferred insulation composition according to the invention.

Figure 4 is a transport conduit and an insulation composition according to the invention.

Figure 5 is a transport conduit and an insulation composition having means to add a transport gas.

Figure 6 is a cross-sectional view of an insulated transport conduit provided with a means to detect liquid water.

DETAILED DESCRIPTION OF THE INVENTION

The invention shall be described in more detail and preferred embodiments will be discussed and their specific advantages.

The insulation composition according to the invention comprises a layer (a) composed of a woven, non-woven or knit fibrous material. The function of this layer is to separate the wicking layer, which may contain water, off a metal surface of the conduit or vessel which is to be insulated. This layer (a) should be sufficiently porous and thin as to ensure that any water on said surface is physically pressed up into the wicking layer (b). The meaning of the terms hydrophobic and hydrophilic as used to describe layer (a) and layer (b) is only to indicate that layer (a) is less hydrophilic than the wicking layer (b). The hydrophilic property of the layer will be defined by the material of the layer and the structure. For the present invention a more hydrophilic material will more quickly take up a volume of water per volume of layer material. The result of the fact that layer (a) is less hydrophilic than the wicking layer (b) is that any water which may be present on the surface of the metal object to be insulated is readily transported away from said surface and into the wicking layer. The material of layer (a) may, optionally, be treated with a surfactant or otherwise processed to impart a desired level of wettability and hydrophilicity. The layer (a) should be sufficiently porous to water such that water can readily penetrate through its thickness. Layer (a) may suitably be composed of the same material used as topsheet in sanitary products such as diapers and sanitary napkins, wherein the topsheet is the sheet is made of a synthetic fiber and which is in contact with the skin of the user. Suitable fibrous materials for layer (a) are synthetic fibers, for example, carbon, polyester, polyether, polyethylene (PE) or polypropylene (PP) fibers. The material of layer (a) is suitably present as a spunbonded web or as a bonded-carded web because they are more easy to manufacture. An example of a suitable layer (a) is a non-woven, spunbond, polypropylene fabric. For

applications wherein the temperatures can vary between -4 and 175 °C, for example when the insulation is used around a transport conduit in a refinery, it is preferred to use a material which is dimensionally stable under these conditions. Examples of suitable materials for such applications are polyethylene terephthalate or polyether sulphone.

The layer (a) will suitably have a weight of 10 to 100 grams per square meter (gsm) and preferably from 25 gsm to 50 gsm. The fiber size of the fibres used in the woven, non-woven or knit material is suitably from 0.1 to 100 microns. Embodiments wherein more than one of the above described layer (a) are positioned on top of each other are within the scope of the present invention. Applicants believe that one layer (a) is sufficient but it is not excluded to use more than one layer (a).

Layer (b) is a so-called wicking layer. The function of this layer is to quickly transport water away from layer (a) and thus away from the insulated metal surface and to remove the water to suitably a discharge point or to a preferred next void layer (b1). The wicking layer should be sufficiently hydrophilic and porous so as to ensure that any water in layer (a) is easily and quickly drawn into the wicking layer by hydrophilic and capillary forces. The wicking layer should be sufficiently thick to avoid complete saturation with water of said layer. Complete saturation is to be avoided because wicking layer (b) would then loose its ability to remove any water from layer (a). Intake of water from layer (a) is suitably performed within seconds or minutes while the subsequent discharge of water from layer (b) can proceed more slowly from the larger volume of wicking layer (b).

Wicking layer (b) is suitably composed of a woven, non-woven or knit fabric, preferably a non-woven fabric and even more preferably a non-woven fabric made from a hydrophilic fiber such as cotton, viscose, for example Rayon, or polyamide, or surface treated fabrics, such as a polypropylene. An even more preferred non-woven fabric is a non-woven nylon as obtainable from companies like Fiberweb or Freudenberg. Other examples of suitable materials for the wicking layer (b) are the hydroscopic materials described in WO-A-2005/038330,

which publication is hereby incorporated by reference and/or the filler material as described in WO-A-99/09346, which publication is hereby incorporated by reference. The wicking layer (b) preferably has a weight of 30 to 300 grams per square meter (gsm) and more preferably about 25 gsm to 50gsm. The fabric will have a fiber size from 0.1 to 100 microns. The fabric is preferably made from a polymer that is dimensionally stable from about -5 to 175 ºC. The thickness of layer (b) will depend on the type of material, the method to discharge water from this layer and the expected volume of water which is to be removed locally. Embodiments with more than one layer of wicking material as described above on top of each other are within the scope of the present invention. Applicants believe that one layer (b) is sufficient but it is not excluded to use more than one layer (b).

In a preferred embodiment of the present invention a layer (b1) of a high void material is present between wicking layer (b) and insulation layer (c). The high void material layer (b1) is advantageous because it provides a drain which can take in water from the wicking layer (b) and/or the insulation layer (c) and subsequently provide a transport channel to discharge of said water from the insulation. Transportation can be passive transport or more preferably by means of a transport gas, for example hot air, preferably hot and dry air, which is supplied to layer (b1) at a first point. At a second point spaced away from said first point the gas is subsequently discharged from layer (b1) and from the insulation composition. Along the way evaporated water is picked up in the high void layer and an efficient and quick method to dry an insulation composition is obtained. This method of discharging water from an insulation composition is more effective than the prior art method described in the earlier referred to JP2002181280 because the pressure drop will be lower and because water will concentrate in this layer making the pick up by means of the transport gas much more effective.

The high void material is suitably structurally strong such to maintain the high void properties when applied as part of an insulation composition. The material is an open structure that allows for easy movement of a gas, for example the

transport gas. The high void space is furthermore advantageous because of the resulting low pressure drop over the distance between the spaced away first and second points described above.

The different elements of the insulation composition comprising the high void material layer (b1) may be combined when applying the composition to a surface to be insulated. In a preferred embodiment an intermediate composition, comprising layers (a), (b) and (b1), are combined with insulation material layer (c) when positioning the insulation composition on the metal surface to be insulated. The invention is thus also directed to such an intermediate composition comprising the following layers (a) a hydrophobic, moisture permeable layer composed of a woven, non-woven, or knit fibrous material, (b) a hydrophilic wicking layer, and a layer (b1) of a high void material. This intermediate composition can be used to manufacture the insulation composition according to the invention. In addition the composition can also be used to keep metal surfaces dry in situations where insulation is not the primary objective of the use. In this use no insulation layer (c) is present. When used in this other, non-insulating, application the composition can also comprise a cover sheet of a polymer or metal material. Polymer cover sheets may be a poly-olefin sheet, e.g. a PE or PP sheet and examples of a metal sheet are for example aluminum foil or sheet also referred to as aluminum cladding. The high void material layer (b1) of this composition is advantageous for the same reasons as described earlier for the insulation composition in that it provides a drain which can take in water from the wicking layer (b) and subsequently provide a transport channel to discharge of said water from the composition. Transportation can be passive transport or more preferably by means of a transport gas, for example hot air, which is supplied to layer (b1) at a first point. At a second point spaced away from said first point the gas is subsequently discharged from layer (b1) and from the composition. Along the way evaporated water is picked up in the high void layer and an efficient and quick method to dry the composition is obtained.

The high void material can be a knit fibrous material, sometimes also referred to as Spacer 3D, or a so-called three dimensional fiber network. An example of a

suitable knit fibrous material is Spacetec as obtainable from Heathcoat Fabrics Ltd. A suitable three dimensional fiber network is a so-called embossed material comprised of one or more sheets of woven fibers which are spaced away from each other by means of projections as for example described in US5364686. The projections are portions of the sheet of woven fiber which rise above the base plane of the sheet. Such a network can be obtained by molding a textile fabric impregnated with a thermoplastic or more preferably by molding a thermoplastic fabric, wherein the mold is shaped such that the above projections are formed when molding. The projections can have many designs and rise about between 2 and 20 mm above the base plane of the sheet. The fabric which may be woven or knit and should be sufficiently permeable for water and/or water vapor. The thermoplastic is preferably a hydrophobic fiber with a diameter of 0.02 mm to 0.2 mm, preferably 0.05 mm. The thermoplastic is preferably dimensionally stable from about -5 to 175 ºC. Preferred thermoplastic materials are polyethylene terephthalate or polyether sulphone. The layer preferably has a void ratio *e* of between 5 and 50 wherein void ratio is defined as the Vv/Vs in which Vv is the volume of void and Vs is the volume if solid material in the high void material. The bulk density will suitably be between 0.02 g/cc and 0.2 g/cc. The thickness of the high void material layer (b1) should be sufficient to transport water away from the insulating composition in combination with an acceptable pressure drop. Suitably the layer (b1) is at least 2 mm and more preferably at least 5 mm thick. The upper limit is less critical, but in order to avoid a very thick insulation composition layer (b1) is preferably at most 20 mm thick.

The three dimensional fiber network materials which may be used for layer (b1) may be the same three dimensional fiber networks used for mattresses in hospital beds and car seats as for example described in US6701556. Because for the present application the ‘feel’ for the patient or car driver is less important also three dimensional fiber networks can be used which are not optimal for these applications but have the desired high void and structural strength properties as suited for the presently invented application.

The insulation material present in insulation material layer (c) may be any known type of insulating material. The insulating material may be of the open or closed cell type. Examples of closed cell type insulating materials are foamed rubber or foamed plastic. Examples of open cell insulating materials are mineral wool as for example glass wool, rock wool or slag wool obtainable from Rockwool International A/S, foamed open-cell plastic and polyurethane foam. or may further alternatively comprise combinations of the materials mentioned above The thickness of the layer will depend on the required insulation. For example one to four layers of commercially available insulation material may be combined wherein each individual layer may have a thickness of between 25 and 150 mm.

In a preferred embodiment a second high void material layer (d) is present on the insulation material layer (c). This second high void material layer (d) is present at the side of layer (c) not facing earlier referred to wicking layer (b) or high void material layer (b1). This second high void layer can effectively remove any water entering the insulation from the exterior before it reaches the insulation material layer (c). Possible high void materials for use in layer (d) are as described for layer (b1), wherein for an insulation composition the high void material in layer (b1) may be the same or different from the high void material of layer (d). The thickness of layer (d) may be between 2 and 20 mm.

Applicants found that such a high void layer (d) can also be used in combination with an insulation layer (c) as such. The invention is thus also directed to an insulation composition comprising a layer of insulating material, as described above, and a layer of a high void material as described above. The invention is also directed to an insulated metal transport conduit comprising a metal transport conduit, the insulation material and a cover sheet (e), wherein between insulation material and cover sheet (e) a layer (d) of the high void material is present.

The insulation composition is suitably used to insulate a metal vessel, metal apparatus, and more preferably a metal transport conduit. Examples of vessels are heat-exchangers, storage tanks and reactors. The temperature of the metal

surface facing the insulation may be below or above the dew point of water. The insulation may have the function to avoid heating or avoid cooling of the metal surface by the ambient air present at the metal surface. Preferably the insulation is present to avoid cooling of the metal surface. The temperature of the metal surface to be insulated is suitably from 30 to 175 ºC. The metal may be stainless steel and especially carbon steel and the so-called 300 series stainless steels. It is especially such surfaces and temperature conditions wherein corrosion in the presence of liquid water can readily occur. On the carbon steels it manifests as generalized or localized wall loss. With the stainless pipes it is often pitting and corrosion induced stress corrosion cracking (CISCC). Such corrosion can now be avoided by using the insulation composition according to the present invention.

The invention is especially directed to refinery, LNG, GTL and chemical processing pipelines and steam pipelines in general which pipelines are made of steel piping and insulated with an insulating composition according to the invention and protected with an aluminum cover. Pipelines and transport conduits have the same meaning in the context of the present invention. Unfortunately, moisture cannot be completely excluded from the insulation of such a pipeline and, by the natural hot/cold cycles of the day, vapor condenses in the insulation and collects against the pipe. Over time, this condensation can cause, through electro-chemical reactions, the corrosion of the pipe. In the extreme, this can cause leakage/release from liquids, gases and slurries. This may lead to loss of production yield, unintended shut-downs and hazardous situations. Moreover the presence of water in the insulation material reduces its insulating value and forces the frequent replacement of insulation.

The invention is thus especially directed to an insulated metal transport conduit comprising a metal transport conduit and an insulation composition as described above, wherein the moisture permeable sheet of layer (a) contacts the outer surface of the metal transport conduit and wherein a cover (e) is present at the exterior of the insulation composition. The cover (e) is a diffusion proof layer at the outside of the insulation composition relative to the inner positioned

conduit to be insulated. The diffusion proof layer may suitably be a plastic or metal foil, e.g. an aluminium foil or sheet also referred to as aluminium cladding.

The insulation composition described above is not only suitable for insulating the actual transport conduit, but also for mounting on valves, flanges, fittings and the like, which are built into or attached to the conduit. Although cover (e) is substantially diffusion proof water nevertheless can enter the insulation composition where the cover (e) is damaged or at locations where different parts of the insulation composition connect. Because of this unavoidable ingress of water into the insulation composition liquid water cay accumulate on the metal surface to be insulated. By using the insulating composition according to the present invention the presence of liquid water can be avoided or at least the time at which the liquid water is present on the surface can be reduced. This reduces the accumulation of corrosion.

The insulated metal transport conduit preferably has a layer (b1) of a high void material between wicking layer (b) and insulation layer (c). Preferably layer (b1) is fluidly connected to a means to discharge water from said layer (b1) to the exterior of the insulated metal transport conduit. Such a discharge can be a drain pipe as for example described in WO-A-2007061311. Water as present in the insulation composition can for example evaporate into high void layer (b1) and be subsequently transported by passive transport to said means to discharge water. In addition the insulated transport conduit preferably also has an supply means to add a transport gas to layer (b1) such that evaporated water can be picked up between said inlet means and outlet means in layer (b1) as described above.

Detection of CUI (Corrosion under insulation) in industrial plants has been identified as a significant problem, which can affect the integrity of tanks and pipes and lead to a shortening of the lifespan or even outright failure of expensive industrial infrastructure. Lengthy inspections and equipment failures often lead to manufacturing facility downtime, and consequently a loss of efficiency and increase in associated costs. One insidious aspect of CUI is that the corrosion is hidden from view by the thermal insulation. Typically, plants have miles of piping and thousands of square feet of insulation covered equipment. It

is neither practical nor economical to remove the insulation at all locations for direct inspection. For the assessment of CUI a wide range of non-destructive techniques have been proposed, as described by Michael Twomey, NDTnet 1998 February, Vol.3 No.2, INSPECTION TECHNIQUES FOR DETECTING CORROSION UNDER INSULATION. Examples of techniques are eddy current measurements to measure the wall thickness, radiography techniques, guided wave techniques and the use of hand-held thermal imaging cameras to identify locations of wet thermal insulation. The known methods are however not optimal because of their costs, their complexity, the requirement to remove the insulation before inspection and/or the highly laborious character of the method. Other disadvantages are that most methods are not suited to measure on a continuous basis and/or that some methods are not distinctive.

There is, therefore, a widespread but presently unmet need for an efficient and accurate detection system capable of identifying likely CUI corrosion sites in a variety of industrial manufacturing and processing environments.

Examples of the above methods will be briefly discussed. WO201050617 describes an inspection method for inspecting corrosion under insulation, in piping to which a heat insulator is provided, the method comprising: providing a fiber optical Doppler sensor to the piping; and inspecting the corrosion in the piping by using the fiber optical Doppler sensor. A disadvantage of this method is that first corrosion has to occur before it can be detected.

WO201053813 describes a method of detecting corrosion under insulation. The method utilizes infrared imaging video cameras to detect characteristic signatures of wet thermal traits on process equipment and communicating said corrosion related data to an operator. This method detects wet areas in the insulation. This is advantageous because it will identify areas where the risk of corrosion may be significant. This method enables maintenance of the equipment based on risk based inspection. This is advantageous because insulation needs to be removed less for an actual inspection and only the locations, where corrosion may be expected, are inspected. A disadvantage of the method is that an operator has to scan the entire length of the pipe with a camera.

WO-A-2010/143948 describes a system wherein the local temperature and humidity values are measured in the insulation surrounding a pipeline. These values are said to be an indication related to local corrosion and degradation of the pipeline. A high humidity and a certain temperature may indicate that corrosion can occur locally. Applicants however believe that this system will still give rise to many falls calls.

Applicants now found a new method to detect and locate liquid water in an insulation composition positioned around an insulated metal transport conduit, wherein the insulation composition comprises of a layer of wicking material and wherein the layer of wicking material comprises measuring means to measure the presence of liquid water. Applicants believe that the presence of liquid water is a better indicator that corrosion is taking place locally and that this method will give far less falls calls than the method described in WO-A-2010/143948. A further advantage is that the method is more simple in that it measures less properties in the insulation than the prior art method which is based on the measurements of temperature, humidity and in some cases also the chloride, ammonia and nitride contents.

The means to detect liquid water can be those known to the skilled person. Examples of suitable means are water sensible coatings. Water sensible coatings are preferably used in combination with a single thin waveguide. In such use the presence of liquid water will change the color of the coating. By passing light through the waveguide a change of color will be detected. Since the speed of light in the waveguide is known the position of the color change and thus the presence of liquid water can be determined.

Another means to detect liquid water is by measuring the local electrical conductivity in the wicking layer. This detector suitably comprises an ohm-meter and a pair of electrodes. A minimum amount of water present between the two measuring electrodes will close the so-called electrical bridge and allow a small current to run between the two electrodes. Suitably the detector is operated in a so-called I/O mode allowing detection of either presence or absence of liquid water. The number of pairs of electrodes in the wicking material will be

dependant on the desired accuracy. The output of the ohm-meter can be sent to an electronic device for triggering action, data acquisition and/or storage. Communication of the numerous measurements along a transport conduit to a central data processing unit may for example be performed by applying a multiplex technique to the various signals and communicating the collected signals via one single coaxial cable to said central data processing unit.

The electrodes of the detector suitably comprises of a non-corroding electrical guiding material, e.g. a silver wire and length; but also include electrical guiding components printed on flexible, non-electrical guiding materials such as poly ethylene. The electrodes are suitably directly applied to, or interwoven in the various wicking layers of the insulation composition.. The detection limit of this detection system will depend on a number of typical detector dimensional parameters allowing the system to be tuned towards the application needs. Such detectors are known to the skilled person. For example the detectors may be the same as the detectors used in a so-called Protimeter, a commercially available moisture meter.

The intrinsic dispersion of liquid water in the wicking layer leads to significant lowering of the minimum volume of detectable water. When applied to a transport conduit the detectors are suitably uniformly distributed in the wicking material. The pairs of electrodes of one detector may be spirally wrapped around the axis of the transport conduit for a certain length of the insulated conduit. Other models of wrapping may be applicable for achieving adequate spatial resolution in e.g. non-linear, non uniform applications such as flanges and pumps, reactors and /or other process equipment.

Because water will accumulate in the wicking layer any liquid water which is present in the insulating composition can be effectively detected without having to use a large array of measuring means across the entire insulating composition. If no water is detected in the wicking layer it can be safely concluded that no water is or has been present on the metal surface and that therefore the corrosion risk at that location can be considered to be low. Thus

locations of corrosion risk can be identified and maintenance based on risk based inspection can be performed in a more simple manner.

The invention is thus also directed to an insulated metal transport conduit having a layered insulation composition placed around said conduit, wherein the insulating composition comprises a wicking layer and wherein the wicking layer comprises a means to measure the local electrical resistance in said layer. The wicking layer may as described for wicking layer (b) above. The insulation composition is preferably an insulation composition according to the present invention.

The detection of water by means of the above method can trigger an inspection of the insulation at the location where water is detected or can be used as a trigger to start providing a transport gas as described above to a high void layer (b1), if present. The supply of transport gas can be terminated once the measurement of the local conductivity indicates that the water has been removed or when the content of water in the transport gas as it leaves the insulation reached a certain minimum value. The transport gas and its use as described above can also be advantageously used to detect leakage of the insulated process pipelines. Such leaks may be caused by damaged seals between flanges or by, illegal, tapping. The method comprises supplying a transport gas to the high void material layer at one position and discharging the transport gas at a second location and analyzing the composition of the transport gas as it leaves the insulation composition for components which are present in the insulated pipelines. This method is suited to measure small leaks of for example hydrogen or other flammable components. Thus the invention is also directed to a method to detect leakage of an insulated metal transport conduit comprising a metal transport conduit and an insulation composition, wherein the insulation composition comprises of a layer (b1) of a high void material, by supplying a stream of gas to the layer of high void material at a first point and discharging a stream of the gas and any leaked components from the insulated transport conduit from the high void material at a second point and analyzing said discharged stream for such a component.

DETAILED DESCRIPTION OF THE FIGURES

The absolute and relative dimensions of the layers in the Figures are chosen to more clearly illustrate the composition and are not necessarily the most optimal dimensions.

Figure 1 shows an insulation composition (1) having a moisture permeable layer (2), a wicking layer (3) and insulation material layer (4).

Figure 2 shows an insulation composition (5) according to the invention and part of a metal surface (16) of a conduit to be insulated. Figure 2 further shows a hydrophobic layer (6), also referred to as the drying layer, as a thin hydrophobic fabric that separates the metal surface (16) from a wicking layer (7). The wicking layer (7) draws water off the surface of the metal surface (16), through the drying layer (6) and quickly distributes it throughout a large region of the wicking layer (7). Once distributed through the wicking layer (7), the water evaporates in a layer (8) of a high void material. On the other side of the high-void layer (8) and facing away from the wicking layer (7) is an insulation material layer (9) is present. When wet, this insulation layer (9) is also dried by the natural evaporation of the water from the insulation material layer (9) or accelerated by air forced through the high-void layer (8). Optionally a water impenetrable polymer film (8a) may be used to isolate the insulation layer (9) from the high-void layer (8).

Figure 3 shows an insulation composition (10) comparable to insulation composition (5), having a hydrophobic layer (11), a wicking layer (12), a layer (13) of a high void material and an insulating material layer (14). In addition an additional layer (15) of a high void material is present at the side of the insulation material (14) which does not face layer (13).

Figure 4 shows a cross-sectional view of an insulated metal transport conduit (17) comprising a metal transport conduit (18), an insulation material layer (19) and a cover sheet (20). Between insulation composition (19) and cover sheet (20) a layer (21) of high void material is present. Between layer (21) and insulation material layer (19) a water impenetrable polymer film (21a) may be present avoid water entering the insulation material layer (19) from the layer (21)

of high void material. Water will as a result flow due to gravity to the lower end of the insulated transport conduit (17) and can subsequently be discharged from said conduit via discharge opening (22).

Figure 5 shows an insulated transport conduit as in Figure 2 provided with an optional layer (23) of a high void material. The cover sheet, which is typically present, is not shown in this figure. In figure 5 layer (8) of high void material is fluidly connected to a means (24) to supply a stream of gas to said layer (8) at a first position (25). Layer (8) is fluidly connected to a means (26) to discharge gas from said layer (8) at a second position (27). As shown in Figure 5 first (25) and second position (27) are axially spaced away along the axis (28) of the insulated metal transport conduit.

The means to supply a transport gas and the means to discharge the gas loaded with water can be added to the insulated transport conduit at a later moment in time. For example, when after some years the water problem becomes apparent for a section of the insulated transport conduit such means may be added. This may be advantageous in order to minimize the initial investment and complexity of the system.

Figure 6 shows a cross-sectional view of an insulated transport conduit (18) according to the present invention. In wicking layer (7) (layer (b)) two pairs of electrodes (29, 30) are present and spirally run along a section (31) and (32) respectively along the longitudinal axis (28) of the transport conduit (18). If water is detected by a pair of electrodes (29) or (30) one will know at which section water is detected by reference to the pair of electrodes that detect the liquid water. By having multiple pairs of electrodes, like pairs (29) and (30), along the axis of the transport conduit a system results which can simply detect and locate said water. The accuracy can be varied by varying the length of the section for each individual pairs of electrodes.

Examples

The invention will be illustrated by means of the following non-limiting examples.

Comparative Experiment A

A flat plate was heated to 65 ºC to simulate the surface of an oil pipeline. Onto this plate a pair of thin electrodes separated by a gap of 0.5 mm was affixed. The resistance between these electrodes was measured by an ohm meter. Below 100 kΩ resistance water was considered to be present. At or above 2,000 kΩ resistance the surface was considered dry. To confirm that the detector worked, a single drop of water placed on the exposed electrodes. The resistance dropped from a value greater than 2,000 kΩ to less than 100 kΩ. When the water evaporated the resistance rose to a value greater than 2000 kΩ.

On the plate with the electrodes a layer of wicking material composed of a thin, woven, polyester fabric was placed. 5 drops of water were added to the layer at the location of the electrodes. The electrodes detected a dry surface in 90 seconds.

Example 1

Comparative Experiment A was repeated except that between the wicking layer and the surface with the electrodes a flat, thin, knit polypropylene fabric was placed between the electrodes and the wicking layer. After the 5 drops of water were added a dry surface was detected in 30 seconds.

Comparative Experiment B

A fiberglass insulation material having the dimensions of 10cm x 10cm x 5cm was placed directly onto the plate with the electrodes of Experiment A. 15 ml of water were injected at the center of the fiberglass insulation at 0.5 mm above the electrodes. The entire volume was absorbed by the insulation. The resistance immediately dropped to <100 kΩ and only rose as the surface approached dry. Although only about 3 ml of water evaporated from the system (the remainder trapped in the insulation) the electrodes and the surface were dry in 9 minutes.

Example 2

On the surface of a horizontal mounted pipe surface a detector 1 was placed consisting of two blank iron wires of 0.5 mm spaced apart by 2.5 cm. The wires or electrodes were connected to a voltmeter, type ELRO M300, capable of measuring electrical resistance up to 2000 kΩ between the two electrodes at timed intervals. Subsequently a layer of polypropylene (layer (a)) was placed over the electrodes. The polypropylene layer had the following properties:

Fiber Diameter: 15μm

Fiber Length: continuous

Fiber Shape: 32 projection winged fiber

Fabric Construction: hydro-entangled nonwoven spunbond

Basis weight: 65 gsm

On top of layer (a) a layer of Switch, Nedac Sorbo(art. # 76348) (55% Polyester; 25% Polyamide; 20% Polyurethane) as wicking material was placed having a thickness of 1 mm. At the exterior of the wicking material another set of electrodes (detector 2) as above was placed. Subsequently a layer (b1) of 10 mm of a high void material was placed on top of layer (b) consisting of knitted PES having a void ratio *e* of 20. A next layer of 4 cm of standard fiberglass insulation material as obtained from Rockwool (Rockwool 850) was placed. On top of the insulation material a sheet of polyethylene was placed and on top of said sheet a next layer (d) of a high Void 3D material being Dacron non-woven sheet (100 gsm) having a thickness of 10 mm was placed The entire pipe and insulation was covered with a sheet of aluminum foil.

The aluminum foil was perforated at the top end of the insulation with 1 perforation and at the bottom end of the insulation with a row of 3 perforations just below the upper perforation. Each perforation had a surface area of 1 cm^2.

Through the top perforation, 20 ml of water was injected into the high void material of layer (d). After about 3 seconds, water was pouring out through the bottom holes and 95% of the water was removed from the holes at the lower end of the pipe within one minute.

No liquid water was detected by detector 1 or detector 2 system (measuring a resistance R of greater than 2000 kOhm during the entire experiment). After removing the aluminium sheet, only very little water was observed in the high void material layer (d). After inspection no water could be detected to have entered the thermal insulation material as measured by a protimeter.

Example 3

An insulated pipe of Example 2 was made except that layer (b1) now was composed of 5 mm of a ‘embossed black 3-D material. The 3-D material is an embossed material made from knit PET fibers having a fiber diameter of 0.1 mm and a pore size opening of between 0.5 and 1 mm wherein the knit fibers are molded with a mold shape having single sided cylindrical projections of 0.5 cm by 0.5 cm cylinders which are regularly spaced with 1 projection per cm.

To this layer (b1) air of 35 ºC and a relative humidity of 35% can be supplied at one end of the pipe and discharged at the other end of the pipe along its longitudinal axis.

1 ml of water was injected into layer (b) (the wicking layer). After 600 seconds the flow of air was turned on for 150 seconds. The results for detector 1 and detector 2 are summarized in Table 1.

Table 1

Time (seconds)	Detector 1 signal (kOhm)	Detector 2 signal (kOhm)	Action
0	>2000	>2000	Injection water
30	>2000	35	
300	>2000	11	
600	>2000	24	Air flow on
750	>2000	>2000	Air flow off

Example 4

Example 3 was repeated except that 2 ml of water was injected into layer (b) (the wicking layer). After 90 seconds the flow of air was turned on for 450 seconds. The results for detector 1 and detector 2 are summarized in Table 2.

Table 2

Time (seconds)	Detector 1 signal (kOhm)	Detector 2 signal (kOhm)	Action
0	>2000	>2000	Injection water
90	110	10	Air flow on
300	275	90	
540	>2000	>2000	Air flow off

Example 5

Example 3 was repeated except that 10 ml of water was injected into layer (b) (the wicking layer). After 30 seconds the flow of air was turned on for 1050 seconds. The results for detector 1 and detector 2 are summarized in Table 3.

Table 3

Time (seconds)	Detector 1 signal (kOhm)	Detector 2 signal (kOhm)	Action
0	>2000	>2000	Injection water
30	115	0	Air flow on
300	170	0	
900	>2000	116	
1080	>2000	>2000	Air flow off

The above examples illustrate that liquid water can be detected and removed within a relatively short period of time from an insulated transport conduit. Imagine a situation wherein liquid water can be present on the metal surface of a transport conduit unnoticed for e.g. a year and can cause 4 mm of

corrosion accumulation (at a rate of e.g. 4 mm/year). With the present invention liquid water can be detected and removed within an hour reducing the accumulation of corrosion by a factor of 8000.

CONCLUSIES

1. Isolerend geheel dat de volgende lagen omvat:
   a. een hydrofobe, voor vocht doorlaatbare laag die gevormd wordt door een geweven, niet-geweven, of gebreid vezelachtig materiaal,
   b. een hydrofiele lontlaag,
   c. een laag die bestaat uit een isolerend materiaal.

2. Isolerend geheel volgens conclusie 1, waarbij tussen de lontlaag (b) en de isolerende laag (c) een laag (b1) voorzien is die bestaat uit een materiaal met een hoog poriëngehalte.

3. Isolerend geheel volgens conclusie 2, waarbij het materiaal met een hoog poriëngehalte een poriëngetal e vertoont dat gelegen is tussen 5 en 50.

4. Isolerend geheel volgens conclusie 2 of conclusie 3, waarbij de laag die bestaat uit het materiaal (b1) met het hoge poriëngehalte, een dikte vertoont die gelegen is tussen 2 en 20 mm.

5. Isolerend geheel volgens één der conclusies 1-4, waarbij de laag (a) die bestaat uit het vezelachtige materiaal, polyethyleentereftalaat of polyethersulfon is.

6. Isolerend geheel volgens één der conclusies 1-5, waarbij een laag (d) met een hoog poriëngehalte aanwezig is langs de zijde van laag (c) die niet is gericht naar de lontlaag (b) of die niet is gericht naar de laag (b1) met het hoge poriëngehalte, indien aanwezig.

7. Isolerend geheel volgens conclusie 6, waarbij tussen de laag (d) met het hoge poriëngehalte en de isolerende laag (c) een vel aanwezig is dat ondoorlaatbaar is voor water.

8. Geïsoleerde metalen transportleiding, een metalen transportleiding omvattende, alsook een isolerend geheel volgens één der conclusies 1-7, waarbij de laag (a) contact maakt met het buitenoppervlak van de metalen transportleiding, en waarbij een afdekking (e) aanwezig is aan de buitenzijde van het isolerende geheel.

9. Geïsoleerde metalen transportleiding volgens conclusie 8, waarbij, tussen de lontlaag (b) en de isolerende laag (c), een laag (b1) is voorzien uit een materiaal met een hoog poriëngehalte, waarbij de laag (b1) in fluïdumverbinding staat met middelen om water uit de laag (b1) naar de omgeving van de geïsoleerde metalen transportleiding af te voeren.

10. Geïsoleerde metalen transportleiding volgens één der conclusies 8-9, waarbij de lontlaag (b) meetmiddelen omvat om de aanwezigheid van vloeibaar water te meten.

11. Geïsoleerde metalen transportleiding volgens conclusie 10, waarbij de meetmiddelen de aanwezigheid van water meten door de plaatselijke elektrische weerstand te meten.

12. Werkwijze om water te verwijderen uit een geïsoleerde metalen transportleiding volgens één der conclusies 9-11, door in een eerste punt langs de leiding een gasstroom aan te voeren naar de laag die bestaat uit het materiaal met het hoge poriëngehalte, en in een tweede punt een stroming van het gas, eventueel vergezeld van water dat is opgenomen uit het materiaal met het hoge poriëngehalte, af te voeren.

13. Werkwijze voor het detecteren en het lokaliseren van water in het isolerende geheel van een geïsoleerde metalen transportleiding volgens conclusie 10, door middel van het meten van de plaatselijke elektrische geleidbaarheid in de lontlaag van het isolerende geheel, en dit in verschillende punten langs de as van de geïsoleerde metalen transportleiding.

14. Werkwijze voor het uitvoeren van op risico-evaluaties gebaseerd onderhoud van een geïsoleerde metalen transportleiding volgens één der conclusies 10-11, waarbij de

isolatie frequenter geïnspecteerd wordt op plaatsen waar vloeibaar water wordt gedetecteerd dan op plaatsen waar er geen of minder water wordt gedetecteerd.

15. Geïsoleerde metalen transportleiding, een metalen transportleiding omvattende, een isolerend geheel, alsook een dekvel (e), waarbij, tussen het isolerende geheel en het dekvel (e), een laag (d) wordt voorzien die bestaat uit een materiaal met een hoog poriëngehalte.

16. Geïsoleerde metalen transportleiding volgens conclusie 15, waarbij, tussen de laag die bestaat uit het materiaal met een hoog poriëngehalte (d) en het isolerende geheel, een voor water ondoorlaatbaar vel voorzien is.

17. Geïsoleerde metalen transportleiding volgens één der conclusies 15-16, waarbij de transportleiding horizontaal is aangebracht, en waarbij onderaan de geïsoleerde leiding openingen aanwezig zijn in het dekvel (e) om het zodoende mogelijk te maken dat water dat verzameld werd in de laag (d) die bestaat uit het materiaal met een hoog poriëngehalte, uit de laag (d) naar de omgeving van de geïsoleerde transportleiding kan worden afgevoerd.

18. Geheel, bestaande uit de volgende lagen:
    a. een hydrofobe, voor vocht doorlaatbare laag die gevormd wordt door een geweven, niet-geweven, of gebreid vezelachtig materiaal,
    b. een hydrofiele lontlaag, en

    een laag (b1) die bestaat uit een materiaal met een hoog poriëngehalte.

Fig. 1

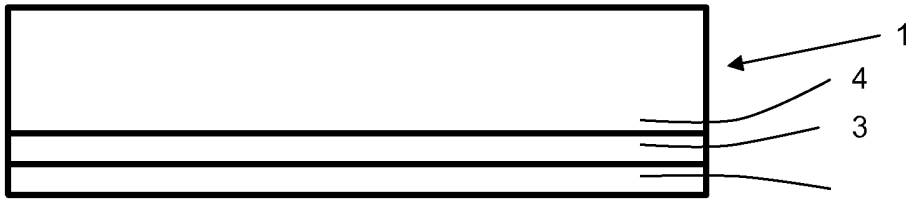

Fig. 2

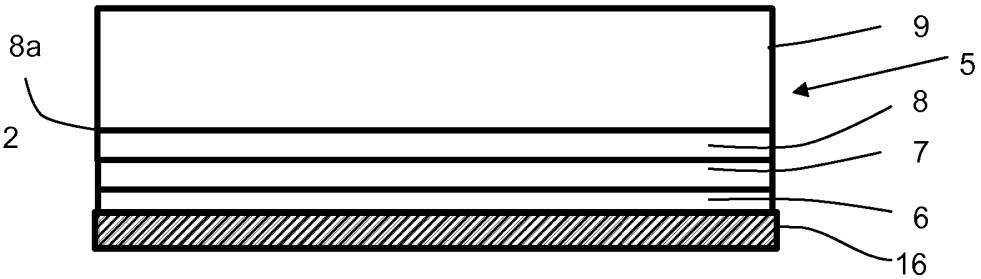

Fig. 3

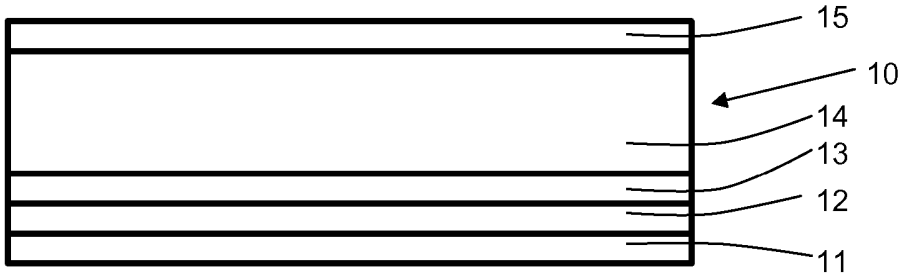

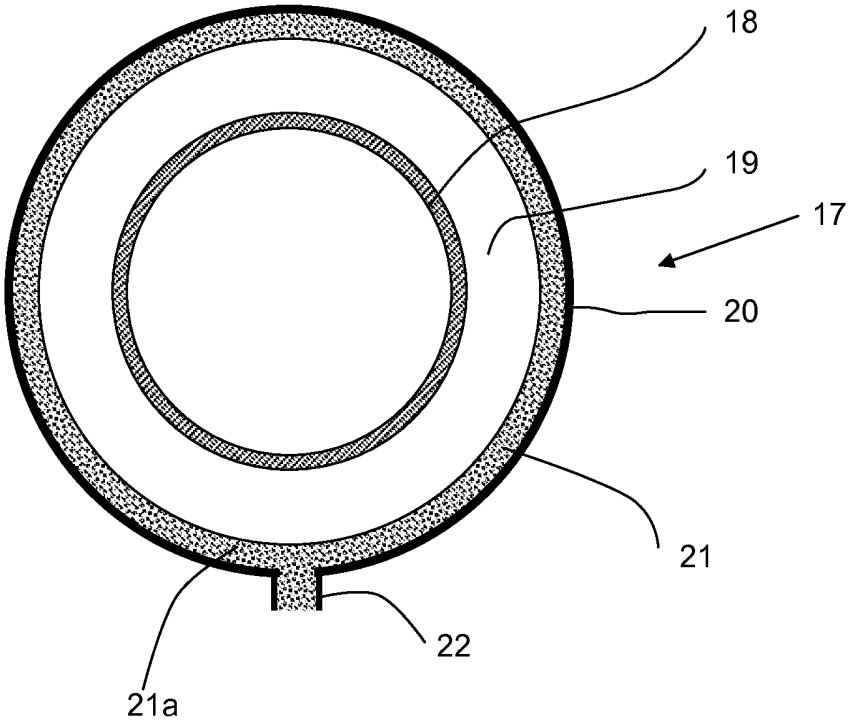

Fig. 4

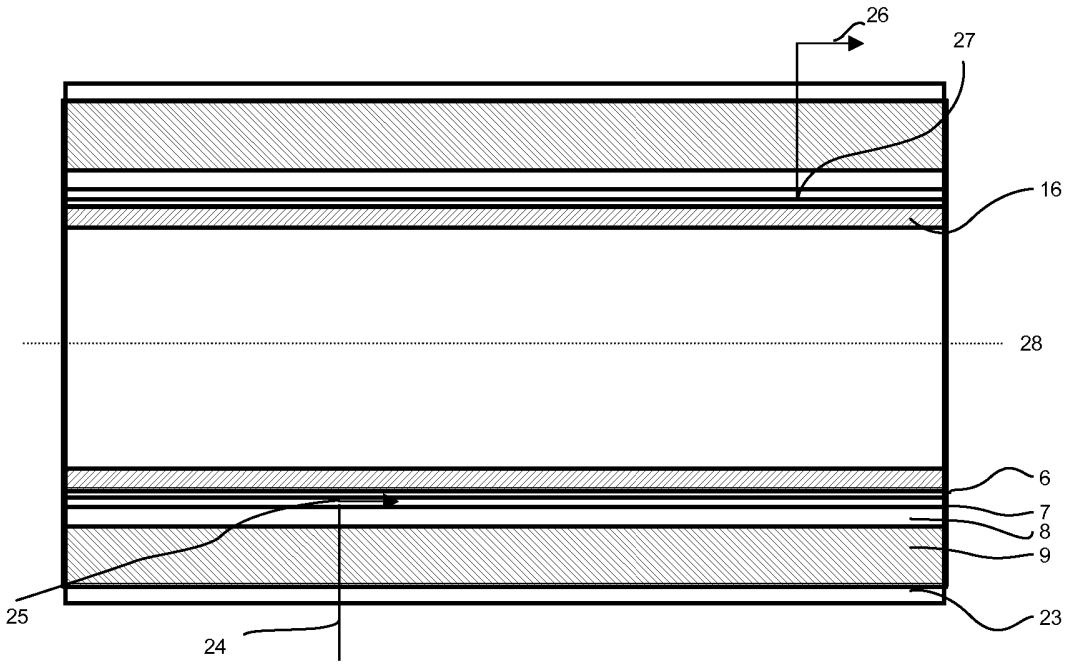

Fig.5

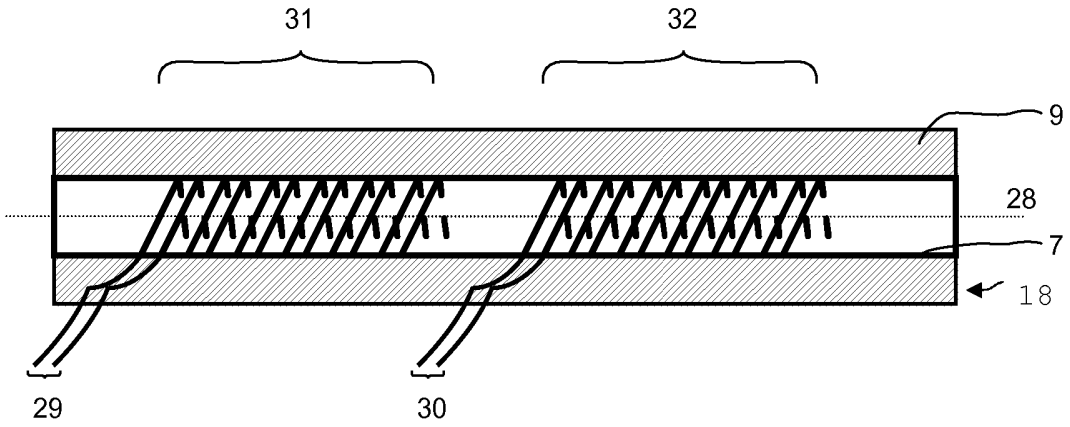

Fig. 6

Agentschap NL
Ministerie van Economische Zaken, Landbouw en Innovatie

RAPPORT BETREFFENDE HET ONDERZOEK NAAR DE STAND VAN DE TECHNIEK

Octrooiaanvrage 2006348

Classificatie van het onderwerp[1]: F16L59/02; F16L59/14	Onderzochte gebieden van de techniek[1]: F16L
Computerbestanden: EPODOC, WPI	Omvang van het onderzoek: Volledig
Datum van de onderzochte conclusies:	Niet onderzochte conclusies[2]:

Van belang zijnde literatuur

Categorie[3]	Vermelding van literatuur met aanduiding, voor zover nodig, van speciaal van belang zijnde tekstgedeelten of figuren.	Van belang voor conclusie(s) nr.:
X, D Y	WO 91/18237 A (VIK CONSULT) 28 november 1991 * figuren 1-4; pagina 5, regel 15; pagina 4, alinea 1; pagina 7, laatste alinea; pagina 8, laatste alinea * ---	1,2,6-8,15-18 3,4,5,9,12
X	EP 1535834 A (AIRBUS GMBH) 1 juni 2005 * figuur 4;abstract; alinea 0047; alinea 0026-0028 * ---	1
X	WO 2005/038330 A (SAINT GOBAIN ISOVER AB) 28 april 2005 * figuur 1; abstract; pagina 11, regels 18 t/m 31 * ---	1
Y	WO 2011/010577 A (NICHIAS CORP) 27 januari 2011 * abstarct; figuur 4; pagina 10, alinea 7 * ---	3,4
Y	JP 2009-024813 A (MEISEI KOGYO KK) 5 februari 2009 * *figuren 3, 9; abstract * ---	5
Y	SU 1772509 A (BALASHIKHINSKOE N P KR) 30 oktober 1992 * figuren 1-3; abstract * -----	9,12

Datum waarop het onderzoek werd voltooid: 23 november 2011	De bevoegde ambtenaar: ir. S. el Bouazzaoui **NL Octrooicentrum**

>> Als het gaat om octrooien

[1] Gedefinieerd volgens International Patent Classification (IPC).
[2] Voor motivering zie toelichting in de schriftelijke opinie.
[3] Verklaring van de categorie-aanduiding: zie apart blad.

Categorie van de vermelde literatuur:

X: op zichzelf van bijzonder belang zijnde stand van de techniek

Y: in samenhang met andere geciteerde literatuur van bijzonder belang zijnde stand van de techniek

A: niet tot de categorie X of Y behorende van belang zijnde stand van de techniek

O: verwijzend naar niet op schrift gestelde stand van de techniek

P: literatuur gepubliceerd tussen voorrangs- en indieningsdatum

T: niet tijdig gepubliceerde literatuur over theorie of principe ten grondslag liggend aan de uitvinding

E: octrooiliteratuur gepubliceerd op of na de indieningsdatum van de onderhavige aanvrage en waarvan de indieningsdatum of de voorrangsdatum ligt voor de indieningsdatum van de onderhavige aanvrage.

D: in de aanvrage genoemd

L: om andere redenen vermelde literatuur

&: lid van dezelfde octrooifamilie; corresponderende literatuur

AANHANGSEL BEHORENDE BIJ HET RAPPORT BETREFFENDE HET ONDERZOEK NAAR DE STAND VAN DE TECHNIEK, UITGEVOERD IN OCTROOIAANVRAGE NR. 2006348

Het aanhangsel bevat een opgave van elders gepubliceerde octrooiaanvragen of octrooien (zogenaamde leden van dezelfde octrooifamilie), die overeenkomen met octrooigeschriften genoemd in het rapport. De opgave is samengesteld aan de hand van gegevens uit het computerbestand van het Europees Octrooibureau per 14 december 2011

De juistheid en volledigheid van deze opgave wordt noch door het Europees Octrooibureau, noch door NL Octrooicentrum gegarandeerd; de gegevens worden verstrekt voor informatiedoeleinden.

In het rapport genoemd octrooi-geschrift		datum van publicatie	overeenkomend(e) geschrift(en)		datum van publicatie
WO9118237	A	1991-11-28			
			DK119290	A	1991-11-15
			EP0528936	A	1993-03-03
			JPH05506914	A	1993-10-07
			AT101910T	T	1994-03-15
			ES2049551T	T	1994-04-16
			DE69101240T	T	1994-06-01
			DK0528936T	T	1994-08-22
			US5441083	A	1995-08-15
EP1535834	A	2005-06-01			
			US2004175516	A	2004-09-09
			DE102004057289	A	2005-08-25
			EP1975061	A	2008-10-01
			AT501931T	T	2011-04-15
			AT521532T	T	2011-09-15

In het rapport genoemd octrooi-geschrift		datum van publicatie	overeenkomend(e) geschrift(en)		datum van publicatie
WO2005038330	A	2005-04-28			
			SE0302738	A	2005-04-18
			AU2004281354	A	2005-04-28
			CA2542294	A	2005-04-28
			SE525985	C	2005-06-07
			EP1687561	A	2006-08-09
			KR20060105000	A	2006-10-09
			EA200600789	A	2006-10-27
			BRPI0415481	A	2006-12-26
			CN1886619	A	2006-12-27
			US2007017590	A	2007-01-25
			JP2007508511	A	2007-04-05
			AT475841T	T	2010-08-15
			DK1687561T	T	2010-11-08
			ES2349141T	T	2010-12-28
			JP4708356B2	B	2011-06-22
WO2011010577	A	2011-01-27			
			JP2011027168	A	2011-02-10
			TW201111672	A	2011-04-01
JP2009024813	A	2009-02-05			
SU1772509	A	1992-10-30			

SCHRIFTELIJKE OPINIE

Octrooiaanvrage 2006348

Indieningsdatum: 7 maart 2011	Voorrangsdatum: --
Classificatie van het onderwerp[1]: F16L59/02; F16L59/14	Aanvrager: RNS technologies BV

Deze schriftelijke opinie bevat een toelichting op de volgende onderdelen:

- ☑ Onderdeel I — Basis van de schriftelijke opinie
- ☐ Onderdeel II — Voorrang
- ☐ Onderdeel III — Vaststelling nieuwheid, inventiviteit en industriële toepasbaarheid niet mogelijk
- ☐ Onderdeel IV — De aanvraag heeft betrekking op meer dan één uitvinding
- ☑ Onderdeel V — Gemotiveerde verklaring ten aanzien van nieuwheid, inventiviteit en industriële toepasbaarheid
- ☐ Onderdeel VI — Andere geciteerde documenten
- ☐ Onderdeel VII — Overige gebreken
- ☑ Onderdeel VIII — Overige opmerkingen

De bevoegde ambtenaar:

ir. S. el Bouazzaoui

NL Octrooicentrum

[1] Gedefinieerd volgens International Patent Classification (IPC).

Schriftelijke Opinie

Octrooiaanvrage **2006348**

Onderdeel I Basis van de schriftelijke opinie

Deze schriftelijke opinie is opgesteld op basis van de meest recente conclusies ingediend voor aanvang van het onderzoek.

Onderdeel V Gemotiveerde verklaring ten aanzien van nieuwheid, inventiviteit en industriële toepasbaarheid

1. Verklaring

Nieuwheid	Ja:	Conclusies	2-14,18
	Nee:	Conclusies	1,15,16,17
Inventiviteit	Ja:	Conclusies	10,11,13,14
	Nee:	Conclusies	2-9,12,15-18
Industriële toepasbaarheid	Ja:	Conclusies	1-18
	Nee:	Conclusies	

2. Literatuur en toelichting

D1= WO91/18237

D2= EP1975061

D3= WO2005038330

D4= WO2011010577

D5= JP2009024813

D6= SU1772509

Nieuwheid en inventiviteit ten opzichte van D1

Uit D1 is een geïsoleerde metalen transportleiding ("pipe 30", figuur 3) bekend, waarbij het isolerende geheel bestaat uit een hydrofobe laag ("plastic film 32", figuren 2 en 3; pagina 5, regels 14 t/m 18), een hydrofiele lontlaag ("wicking layer 33") en een laag die bestaat uit een isolerend materiaal ("insulating layer 37"). De verschilmaatregel tussen het isolerend geheel volgens conclusie 1 van de aanvrage en het bekende isolerend geheel uit D1, is dat de hydrofobe laag volgens conclusie 1 vocht doorlaatbaar is. Het voordeel hiervan is dat condens dat neerslaat op de metalen pijpleiding, en tot corrosie kan leiden, door de hydrofiele laag wordt opgezogen. Bij D1 is in figuur 1 en figuur 4 de hydrofiele laag ("absorbing layer 2/41") direct op de metalen pijpleiding aangebracht, zonder een hydrofobe laag, zodat condens dat op de pijpleiding neerslaat door de hydrofiele laag wordt opgezogen. Voor de vakman zijn er dus op basis van D1 verschillende mogelijkheden om corrosie door condensaat te voorkomen: condens op de metalen pijp opzuigen door een hydrofiele laag zonder een hydrofobe laag (figuren 1 en 4) of de metalen pijp van een niet doorlaatbare hydrofobe laag ("diffusion proof layer", pagina 5, regel 15) voorzien, zodat er op de metalen pijp geen condens kan neerslaan en dus geen corrosie kan ontstaan. De maatregel

volgens conclusie 1 dat de hydrofobe laag vocht doorlatend is, voegt in het licht van D1 niets bijzonders toe. Daarmee is conclusie 1 niet inventief ten opzichte van D1.
Tussen de laag van isolerend materiaal (37) en de lontlaag (33), is de laag voorzien die bestaat uit het materiaal met hoge poriën ("insulating layer 35", figuur 3; pagina 4, alinea 1). Conclusie 2 is uit D1 bekend en is dus niet inventief. Ook de maatregelen van conclusie 18 zijn daarmee uit D1 bekend en dus niet inventief.

Uit D4 is bekend dat het materiaal met het hoge poriëngehalte (aerogel) een porositeit heeft van 90% (wikipedia) en dus een poriëngetal van 9 heeft. Ook heeft de aerogel laag een dikte van tussen de 2 en 20 mm (vertaling: pagina 10, alinea 7). De vakman die naar een optimale dikte en optimale poriëngehalte nastreeft voor het materiaal met het hoge poriëngehalte, om water uit de isolatie af te voeren, komt in zijn zoektocht uit bij D4. De vakman zal dan de laag uit D4 met een dikte van tussen de 2 en 20 mm en met een poriëngetal van 9 toepassen bij D1. Conclusies 3 en 4 zijn niet inventief.
Het gebruik van polyethyleentereftalaat als een hydrofobe laag op een metalen transportleiding is bekend uit D5 (figuur 4). Conclusie 5 is op basis van D1 en D5 niet inventief.

Voorts is uit D1 bekend dat langs de laag van isolerend materiaal (35) is ("insulating layer 37", figuur 3; pagina 4, alinea 1) een laag (37) met een hoog poriën gehalte aanwezig is. Tussen de isolerende laag (35) en de laag voorzien van het materiaal met hoge poriën (37) is een laag voorzien die ondoordringbaar is voor water ("plastic film 32"). Conclusies 6 en 7 zijn op basis van D1 niet inventief. Conclusie 16 is niet nieuw op basis van D1.

Verder is uit D1 (figuur 3; pagina 7, laatste alinea) bekend dat de hydrofobe laag (32) contact maakt met het buitenoppervlak van de metalen transportleiding (30) waarbij er een afdekking (31) aanwezig is aan de buitenzijde van het isolerende geheel. De maatregelen van conclusie 8 zijn uit D1 bekend en zijn dus niet inventief.

Uit D6 is een werkwijze bekend waarbij een gas in een laag van een isolatie wordt gepompt om vocht af te voeren naar de omgeving (figuren 1 t/m 3). Het toepassen van deze werkwijze bij de inrichting volgens D1, is voor de vakman die de isolatie vochtvrij wil houden, voor de hand liggend. Conclusies 9 en 12 zijn op basis van D1 en D6 niet inventief.

Uit D1 is een geïsoleerde metalen transportleiding ("pipe 30", figuur 3) bekend, met een isolerend geheel ("plastic film 32", "wicking layer 33", "insulating layer 35") en een dekvel ("laminate 31"), waarbij tussen het isolerende geheel (32,33,35) en het dekvel (31) een laag is voorzien die bestaat uit een materiaal met een hoog poriëngehalte ("insulating layer 37", figuur 3; pagina 4, alinea 1). Conclusie 15 is niet nieuw ten opzichte van D1.

De geïsoleerde metalen transportleiding (30) wordt horizontaal aangebracht, waarbij onderaan de geïsoleerde leiding openingen ("slot 36") aanwezig zijn in het dekvel (31) om het mogelijk te

maken dat water dat verzameld werd in de laag die bestaat uit materiaal met een hoge poriëngehalte (37) uit de laag naar de omgeving van de geïsoleerde transportleiding kan worden afgevoerd (pagina 8, laatste alinea; pagina 9, alinea 1). Conclusie 17 is dus ook uit D1 bekend en is niet nieuw.

Nieuwheid ten opzichte van D2

Elk van de genoemde documenten D2 en D3 openbaart een of meer maatregelen volgens conclusie 1 van de aanvrage:

D2 openbaart een isolerend geheel ("Isolationsaufbau 10", figuur 4) omvattende een vocht doorlatende hydrofobe laag (Umhüllungsfolien 15A/15B"; alinea 0026-0028), een hydrofiele laag ("Hygroskopische Schicht 14") en een isolerende laag ("Isoliermaterial 1"; alinea 0047). De maatregelen volgens conclusie 1 zijn uit D2 bekend. Conclusie 1 is niet nieuw.

Nieuwheid ten opzichte van D3

Ook uit D3 is een isolerend geheel bekend, bestaande uit een hydrofobe laag ("vapour barrier 2", figuur 1; pagina 11, regels 18 t/m 31), een hydrofiele laag ("hygroscopic material 3"), en een isolerend geheel ("insulating layer 5"). Daarmee is conclusie 1 op basis van D3 niet nieuw.

Conclusie 10 voegt aan conclusie 9 toe dat de lontlaag (b) meetmiddelen omvat om de aanwezigheid van vloeibaar water te meten. Dit is uit genoemde documenten niet bekend en kan daaruit ook niet worden afgeleid. Conclusie 10 en de daarvan afhankelijke conclusie 11,13 en 14 zijn dus nieuw en inventief.

Onderdeel VIII Overige opmerkingen

De volgende opmerkingen met betrekking tot de duidelijkheid van de conclusies, beschrijving, en figuren, of met betrekking tot de vraag of de conclusies nawerkbaar zijn, worden gemaakt:

Bij figuur 1 ontbreekt de verwijzing naar de hydrofobe vochtdoorlaatbare laag, die in de beschrijving met het verwijzingscijfer 2 is aangeduid.

De aanvrage is vrijwel onleesbaar: in de beschrijving zijn voor de diverse lagen de notaties (a), (b), (b1), (c), (d) en (e) gebruikt, terwijl in de figuren daarvoor cijfers zijn gebruikt, per figuur echter weer andere cijfers voor overeenkomstige lagen. De aanvrage zou aan leesbaarheid winnen als ook in de figuren en figuurbeschrijvingen de letters (a) t/m (e) zouden worden gebruikt voor corresponderende lagen.

Conclusie 8 eist dat er een 'afdekking (e)' aanwezig is. Aangenomen is dat deze 'afdekking' aan de (radiale) buitenzijde van de geïsoleerde leiding is aangebracht, derhalve de buitenste laag van het samenstel is. In de figuren 2, 3 en 5 is echter zulk een afdekking (e) niet weergegeven. Ook in

de bijbehorende figuurbeschrijvingen van figuren 2 en 3 ontbreekt zulk een 'afdekking' ('cover sheet'). Dit doet de vraag rijzen of deze figuren 2 en 3 wel volgens de uitvinding zijn.