No. 688,660.

Patented Dec. 10, 1901.

O. L. MAXFIELD.

GOPHER GUN.

(Application filed Aug. 19, 1901.)

(No Model.)

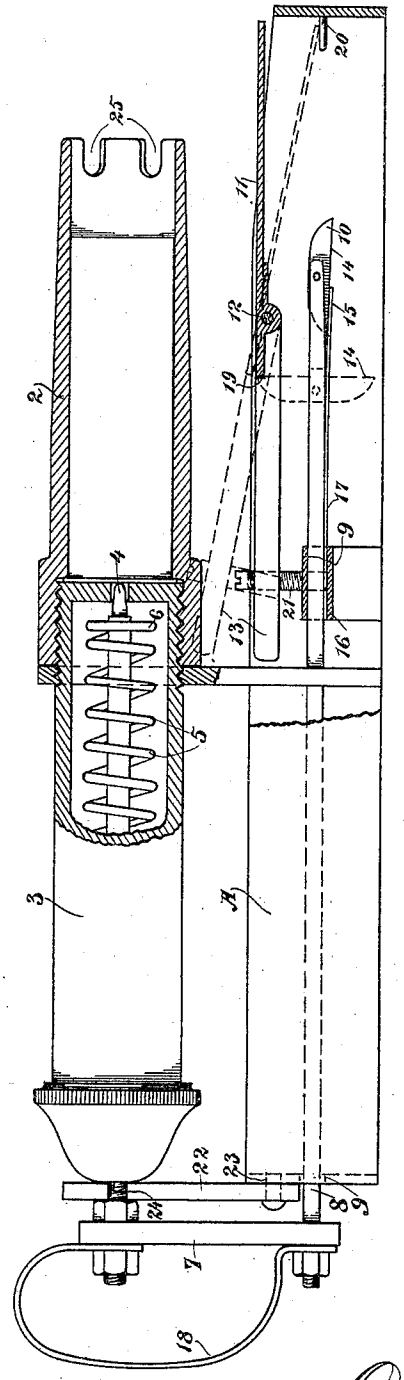

Fig. 1.

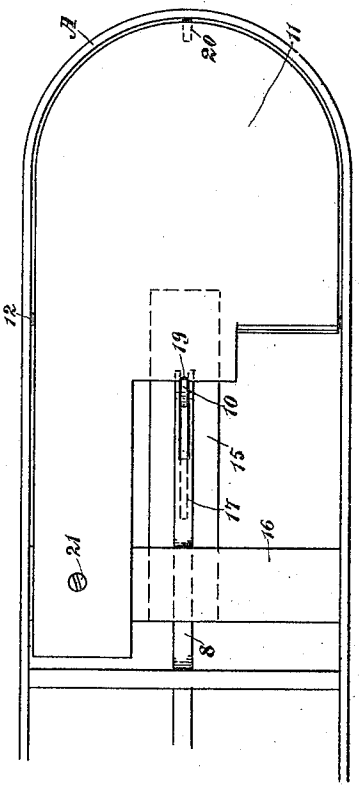

Fig. 2.

Witnesses,

L. P. Nourse

H. F. Ascheck

Inventor,

Orvil L. Maxfield

By Dewey Strong & Co

Attys

THE NORRIS PETERS CO., PHOTO-LITHO., WASHINGTON, D. C.

UNITED STATES PATENT OFFICE.

ORVIL L. MAXFIELD, OF HOLLISTER, CALIFORNIA.

GOPHER-GUN.

SPECIFICATION forming part of Letters Patent No. 688,660, dated December 10, 1901.

Application filed August 19, 1901. Serial No. 72,516. (No model.)

To all whom it may concern:

Be it known that I, ORVIL L. MAXFIELD, a citizen of the United States, residing at Hollister, county of San Benito, State of California, have invented an Improvement in Gopher-Guns; and I hereby declare the following to be a full, clear, and exact description of the same.

My invention relates to improvements in guns intended for the destruction of gophers and like pests.

The object of my invention is to provide a breech-loading gun which can be set in the path of and be discharged by the movements of the animal.

It consists in the combination of the breech mechanism mounted upon a base, of novel means of setting and discharging the gun, a safety device whereby premature explosion may be obviated, and of details more fully to be hereinafter set forth, having reference to the accompanying drawings, in which—

Figure 1 is a side elevation of the gun parts shown in section. Fig. 2 is a top view of the trigger and connections.

A represents a base or carriage, of convenient size and form, upon which the parts of the gun are mounted.

2 is the barrel, of suitable length and caliber, having its breech threaded to fit the cylinder 3, which carries the firing-pin 4. This firing-pin is actuated by a helical spring 5 within the cylinder. One end of this spring bears against a guide-flange 6 on the pin and the other against the rear end of the cylinder. The pin 4 extends through the rear of the cylinder and is connected by a bar or arm 7 with the rod 8. This rod 8 extends parallel with and beneath the cylinder and barrel and is slidable in the guides 9 on the frame. It has a trip or latch 10 pivoted at its forward end and adapted to engage the trigger 11. The trigger is hung under the muzzle of the barrel on pivots, as 12, and is counterbalanced, as at 13, so as always to come into position when the gun is cocked. The latch 10 consists of a plate having a flat horizontal edge 14 and its opposite edge of segmental form. The straight edge of the latch ordinarily rests upon a spring-plate 15, rigidly secured at one end to the cross-bar 16 of the base. The rear end of this spring is slotted, as at 17. As the firing-pin and sliding rod 8 are drawn backward by means of the handle 18 one end of the latch drops into the slot 17. A continued pull on the rod causes the latch to assume a vertical position, and the upper end of the latch is engaged in a notch 19 of the trigger. The lower end of the latch is supported in the slot 17. The gun, properly loaded, is thus set and ready for use. When the trigger is pressed down, the latch is released and immediately assumes a horizontal position, which allows the rod and firing-pin to spring forward and cause the discharge.

The oscillation of the trigger is limited at its forward end in one direction by means of the stop 20. A set-screw 21 is adapted to bear upon the cross-bar 16, whereby the oscillation of the trigger and the ease of discharge of the gun can be regulated.

That the gun may not be prematurely discharged, as when handling it, I have provided a safety mechanism, as follows: This consists of a hook or bar 22, pivoted at 23 to the base A and having a notch 24, adapted to engage the firing-pin in such manner as to limit its stroke, so that when the pin is released it will fail to contact with and so discharge the cartridge in the gun.

The outer end of the barrel is made with notches 25, which serve, first, to take a wrench, if necessary, to remove the barrel; second, to scatter the charge more effectually, and, third, to prevent injury to the trigger by the discharge.

In operation the barrel is detached from the cylinder, a cartridge inserted in the breech of the barrel, and the latter replaced. The firing-pin is then drawn back as far as it will go and then allowed to go forward gently until the latch engages the trigger. The gun is then placed in the pathway of the gopher and the safety-hook thrown off. As the animal pushes the dirt before him the weight of the dirt upon the trigger causes the discharge of the gun, as before described.

Having thus described my invention, what I claim as new, and desire to secure by Letters Patent, is—

1. In a gun the combination of a barrel adapted to contain a cartridge; a supporting-

base; a firing-pin; and means for operating the same; said barrel having a notched muzzle adapted to scatter the charge.

2. A gopher-gun including a base; a cylinder thereon; a barrel secured to the forward end of the cylinder and having a notched muzzle adapted to scatter the charge; a firing-pin operating within the cylinder; a trigger pivoted upon the base and beneath the muzzle of the barrel; and means for operating the trigger.

3. In a gopher-gun, the combination of a supporting-base; a barrel mounted thereon and having a notched muzzle end adapted to scatter the charge; a firing mechanism; and a trigger mechanism said trigger mechanism being located below the muzzle of the barrel.

4. In a gopher-gun, the combination of a base, a cylinder thereon, a barrel adapted to receive a cartridge attached to said cylinder, said barrel having notches at its outer end whereby the charge is scattered, a firing-pin operating in said cylinder, a trigger pivoted upon the base and beneath the muzzle of said barrel, and means whereby said trigger may be set to cause the discharge of the gun.

5. In a gopher-gun, the combination of a base, a breech-loading mechanism mounted thereon, a firing-pin, a rod extending lengthwise of said base and moving in unison with said firing-pin, a trigger pivoted upon said base, and a latch upon said rod adapted to engage said trigger whereby the latter may be set to discharge the gun.

6. In a gopher-gun, the combination with a base or support, of a cylinder in which a firing-pin is movable, a barrel detachably secured to said cylinder, a trigger pivoted upon said base, a rod slidable lengthwise of said base and secured to and movable in unison with said firing-pin, a latch pivoted upon the end of said rod and a slotted plate acting upon said latch whereby the latter is caused to engage and set the trigger.

7. In a gopher-gun, the combination of a base, a cylinder thereon, a barrel detachably secured to said cylinder, a spring-actuated firing-pin operating in said cylinder, a rod parallel with and beneath said cylinder and slidable in unison with said firing-pin, a trigger pivoted upon the base, a counterweight thereon, and means for regulating the oscillation thereof, a latch pivoted on the end of said sliding rod, and a slotted spring-plate adapted to bear against said latch whereby the latter is caused to assume a vertical position and engage the trigger when the firing-pin and rod are drawn backward.

8. The combination in a gopher-gun of a base, a cylinder thereon, a barrel adapted to receive a cartridge in its breech end and secured thereon, a firing-pin movable in said cylinder, an extension of said pin through the rear end of said cylinder, a rod slidable lengthwise of the base, connections between said rod and pin whereby the two parts move in unison, a trigger mechanism, and means upon the rod for engaging said trigger, and a safety device consisting of a hook adapted to engage the exterior rear portion of said firing-pin whereby the stroke of the latter is arrested.

In witness whereof I have hereunto set my hand.

ORVIL L. MAXFIELD.

Witnesses:
H. W. SCOTT,
J. R. FOX.