United States Patent

Randrup

[15] **3,651,751**

[45] **Mar. 28, 1972**

[54] DISGORGER

[72] Inventor: **Benjamin F. Randrup,** 1488 High School Road, Sebastopol, Calif. 95472

[22] Filed: **Jan. 19, 1970**

[21] Appl. No.: **3,784**

[52] **U.S. Cl.** **99/275,** 81/3.2, 99/277.2, 214/304, 214/308, 214/318

[51] **Int. Cl.** **C12h 1/06**

[58] **Field of Search**.....214/304, 308, 309, 310, 311; 141/69, 118, 124, 350; 99/275, 277.2; 81/3.2; 210/514

[56] **References Cited**

UNITED STATES PATENTS

2,438,050	3/1948	Hansen, Jr.	214/304
2,592,085	4/1952	Doorne	214/308
2,670,864	3/1954	Hought	214/313
2,672,267	3/1954	Menning et al.	214/304
1,740,186	12/1929	Lippold	214/304
763,136	6/1904	Winters	141/124
2,544,070	3/1951	Daniels	210/514
2,428,429	10/1947	McNeill	210/514

Primary Examiner—Gerald M. Forlenza
Assistant Examiner—Lawrence J. Oresky
Attorney—Gordon Wood

[57] **ABSTRACT**

The contents of a bottle neck containing sediment are disgorged by tilting the upright bottle from the vertical and removing the crown cap to permit the internal pressure in the bottle to disgorge the contents of the neck. Means is provided for impacting the sidewall of the bottle to enhance the disgorging operation. The apparatus includes means for sensing the presence of the bottle on a conveyor and means for stopping the conveyor while the bottle is tilted and decrowned.

7 Claims, 3 Drawing Figures

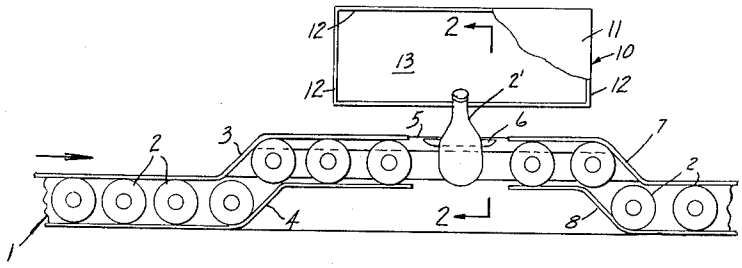

Fig. 1

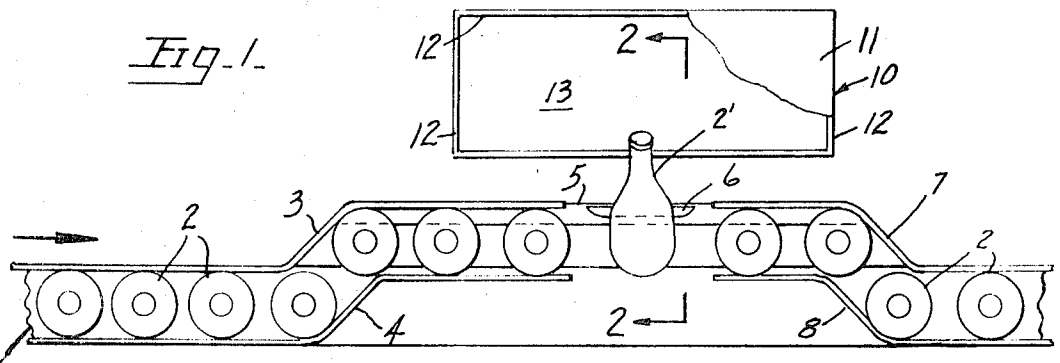

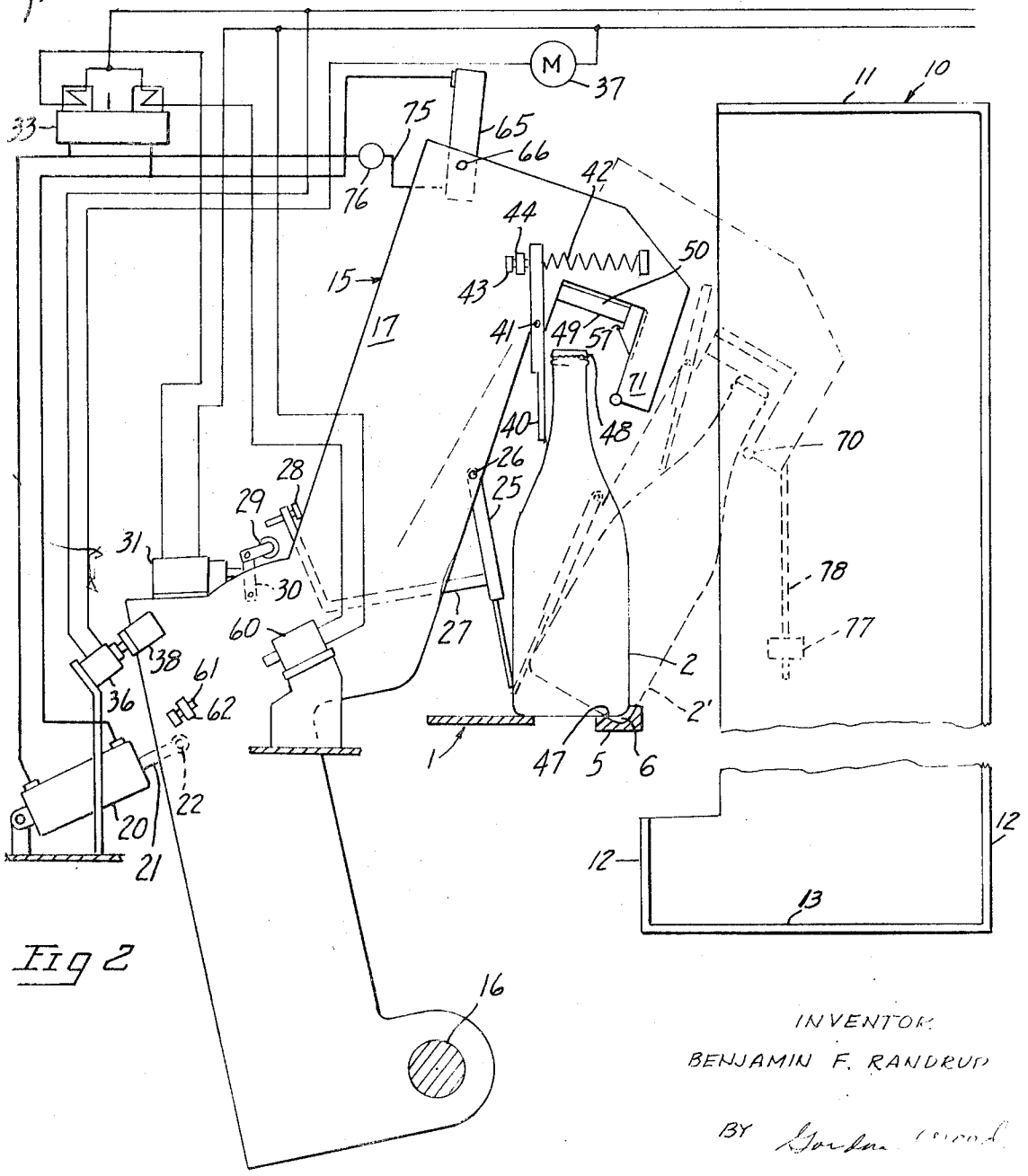

Fig 2

INVENTOR:
BENJAMIN F. RANDRUP

BY Gordon Wood

Fig. 3

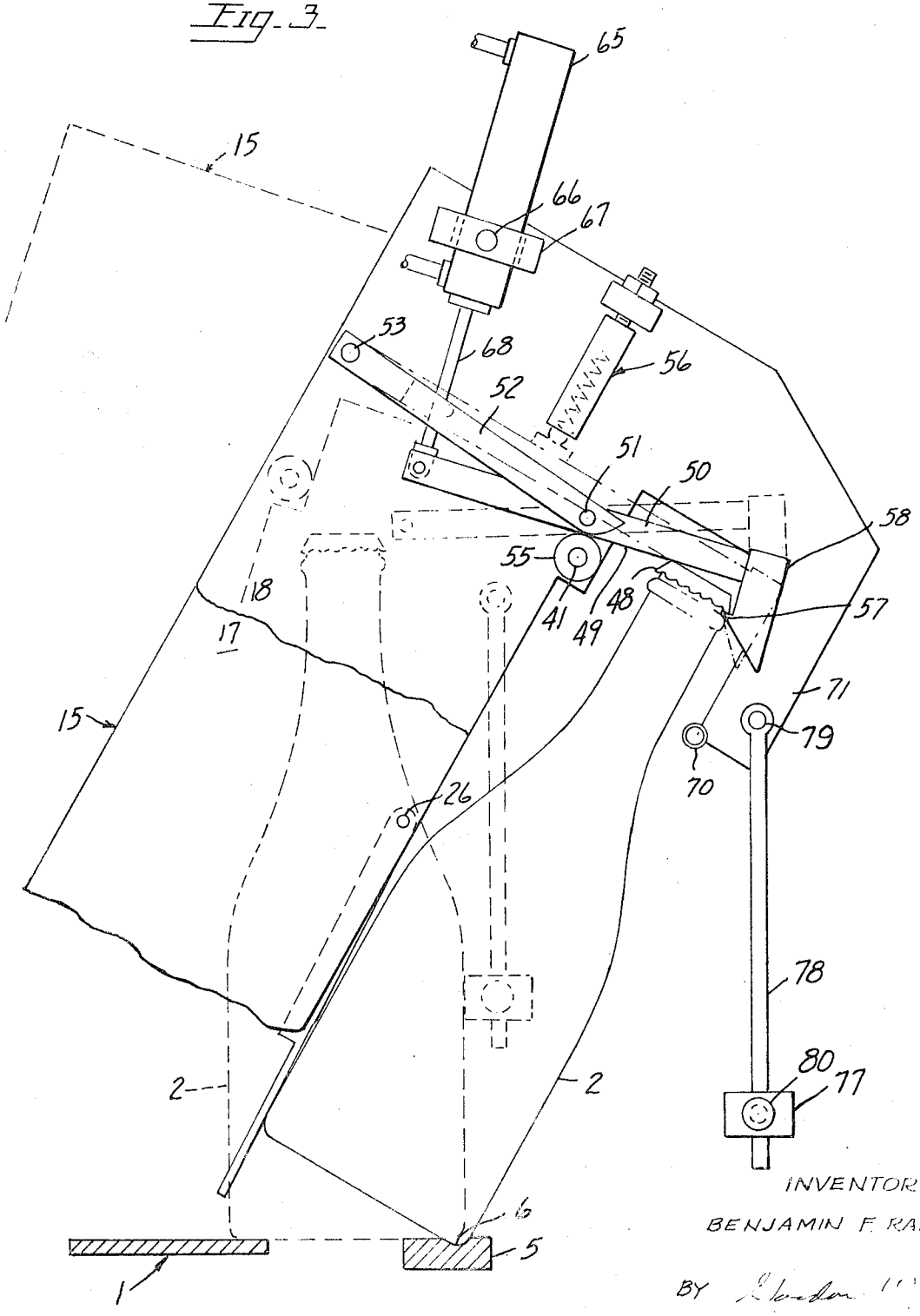

INVENTOR

BENJAMIN F. RANDRUP

BY

DISGORGER

This invention relates to a method and apparatus for use in disgorging the contents of bottle necks in which sediment has been frozen to form a plug. In the copending Pat. application Ser. No. 880,740, filed Nov. 28, 1969, an apparatus is disclosed for freezing the contents of the necks of inverted bottles containing champagne or wine and in which necks sediment from the fermentation process has been settled. The present invention is concerned with the removal of the frozen plug containing the undesirable sediment.

The main object of the present invention is the provision of a method for disgorging the contents of bottle necks so that all of the sediment and other undesirable impurities contained in such necks may be removed before the bottle is provided with its final sealing cork.

Another object of the invention is the provision of an apparatus for disgorging the contents of bottle necks and which apparatus permits the disgorging process to be carried out at a high rate of speed and in a manner to promote uniformity of product.

Still another object of the invention is the provision of a method and apparatus for insuring that all the frozen material in the necks of bottles is completely disgorged from the remaining contents of the bottles.

Other objects and inventions will be apparent from the following specification and from the drawings.

FIG. 1 is a semischematic top plan view of a conveyor for bottles and indicating the manner in which each bottle is tilted into the receiving means for the disgorged material. The tilting and decrowning apparatus of the present invention is omitted from FIG. 1 for clarity.

FIG. 2 is a vertical cross sectional view through the conveyor taken in a plane indicated by lines 2—2 of FIG. 1 and showing the apparatus of the present invention.

FIG. 3 is a greatly enlarged view of the upper portion of the apparatus showing the tilting and the decrowning steps.

In detail and first with reference to FIG. 1, the invention is adapted to be employed with a conveyor of conventional type and including an upper run generally designated 1 on which bottles 2 are received for movement along a path of travel to the right as viewed in FIG. 1.

By means of guides 3, 4 the bottles 2 are shunted to an offset position at which they are supported along one side on the margin of conveyor 1 (FIG. 2) and on the outer side on a flat bar 5 which is formed with a groove 6 intermediate its ends to permit each bottle to be tilted to a position inclined to the vertical as indicated at 2' in FIG. 2. Each bottle is disgorged while it is in the inclined position and then returned to the upright position and shunted by means of guides 7, 8 to the conveyor 1. At the disgorging station a container generally designated 10 is provided which includes a top 11, sidewalls 12 and bottom 13. Since a considerable amount of spray may accompany the disgorged fluid, the container 10 is preferably large enough to catch such spray.

The disgorging apparatus of the present invention comprises a generally vertically disposed housing 15 swingably supported at its lower end on a shaft 16 for swinging movement in a vertical plane at right angles to the path of travel of the bottles 2. This housing 15 essentially comprises a pair of spaced opposed side plates 17, 18 (FIG. 3) spaced apart by suitable spacers (not shown).

The housing 15 is swung from the normal full line position shown in FIG. 2 to the dotted line position by means of an air cylinder 20 which is pivotally mounted at its rear end to any suitable structure and is provided with a connecting rod 21 pivotally connected at its outer end to the housing 15 by means of pin 22. A cycle in the disgorging operation is initiated by the engagement of a bottle on conveyor 1 with the lower end of a switch arm 25 which is swingably supported on a pivot 26 on the housing 15. Switch arm 25 is provided with an extension 27 which carries at its outer end a screw 28 which is adapted to engage a roller 29 of a switch 30 which in turn energizes the switch 31. As best seen in FIG. 2 upon clockwise swinging of switch arm 25 by engagement with the

sidewall of bottle 2 the screw 28 deflects the switch arm 30 of switch 31 so as to energize the "advance" side of four-way valve 33 which in turn applies air pressure to the rear end of cylinder 20 to swing the housing 15 to the disgorging position indicated by dotted lines in FIG. 2.

The initial movement of housing 15 to the right in FIG. 2 causes a switch 36 to be opened to stop the conveyor by opening the circuit containing the conveyor drive motor 37 which is preferably of the type provided with an automatically energized brake to hold the conveyor in stopped position. The switch 36 is normally closed by means of an angle clip 38 which engages switch 36 when the housing 15 is in its normal "at rest" position.

As the housing 15 swings from the full line position to the dotted line position of FIG. 2 the neck of the bottle 2 is engaged by the lower end of an arm 40 which is pivotally supported intermediate its ends on a pin 41 on housing 15 and which is urged in a counterclockwise direction at all times by a compression spring 42. The arm 40 normally clears the upright bottles 2 since counterclockwise swinging of arm 41 is prevented by a stop in the form of a screw 43 threadedly secured in a lug 44 affixed to side 17 of the housing 15. As the housing 15 swings to the right in FIG. 2 the lower end of arm 40 engages the neck of bottle 2 and urges the same away from its upright position toward the inclined position as shown in dotted lines. This tilting movement of the bottle is facilitated by the groove 6 formed on flat bar 5 so that the bottle 2 tilts about an edge 47 between the top surface of flat bar 5 and the groove 6. Further restraint of the bottle 2 while being swung to the tilted position is achieved by switch arm 25 which tends to swing by gravity due to its own weight in a counterclockwise direction against the bottle 2 thus urging the bottom edge of the bottle into the groove 6 in flat bar 5.

As the bottle approaches the fully tilted position shown in dot-dash lines in FIG. 2 the top of the cap 48 is urged against the lower side 49 of an elongated arm 50 which is swingably supported intermediate its ends on a pivot pin 51 (FIG. 3) extending between the legs of a bifurcated lever 52 which in turn is swingably supported on the housing 15 by means of a pin 53.

The lever arm 52 is urged downwardly at all times toward a roller 55 by means of a compression spring assembly 56 so that the top of cap 48 of the bottle 2 is yieldably urged against said underside 49 of arm 50 against the resiliency of the spring assembly 56. This structure permits the apparatus to function regardless of the height of the bottle which may vary within considerable limits.

As the bottle approaches the inclined position shown in full line in FIG. 3 the downwardly directed crimped lower edge of cap 48 is engaged by the upwardly directed shoulder of a hook portion 57 of a decrowning head 58 fixedly secured to the outer end of lever arm 49.

Upon arrival of the housing 15 at the inclined position shown in full line in FIG. 3 a switch 60 (FIG. 2) is actuated by an adjustable screw 61 carried by a lug 62 on side 17 of housing 15. Actuation of switch 60 causes the "retract" side of four-way valve 43 to be energized thus exhausting the rear end of cylinder 20 and admitting air to the front end thereof thereby swinging the housing 15 back to its "at rest" position. Simultaneously with the admission of air to the forward end of cylinder 20 air under pressure is also admitted to the upper end of a relatively small diameter cylinder 65 which is swingably supported intermediate its ends on a pin 66 carried by a lug 67 on housing 15. The connecting rod 68 of cylinder 65 is connected at its outer end to the end of arm 50 that is opposite the decrowning head 58. Thus, upon the start of housing 15 back to its normal position, the cylinder 65, because of its relatively small diameter, is immediately advanced to swing arm 50 in a counterclockwise direction about the edge of cap 48. This action commences the removal of the cap from the bottle neck and as the swinging movement of arm 50 proceeds it then swings about roller 55 causing a fast upward movement of the decrowning head 58 to the dotted line position of FIG. 3 thereby completely removing the cap from the bottle. As

stated above, the decrowning operation is performed immediately upon reversal of the housing **15** so that the pressure in bottle **2** disgorges the frozen plug within the bottle neck into container **10**. To provide support for the bottle **2** as it returns to its upright position an elongated horizontally disposed sleeve **70** is provided on the lower end of a downwardly extending extension **71** on housing **15**. Thus as the bottle is returned to its upright position free of the above-described decrowning mechanism adequate support is provided by rod **70** so that the bottle pivots about edge **47** of flat bar **6** and is returned to upright indicated position indicated in FIG. **2**. It will be understood that additional support for the bottle is provided by arm **40** and switch arm **25**.

As the mechanism returns to its normal position the screw **28** on switch arm extension **27** of course again engages wheel **29** of switch arm **30** of switch **31** and to prevent actuation of switch **31** again the switch **30** is of the type which permits the wheel **29** to be deflected by the screw **28** without actuating the switch **31**. In other words, switch **31** is actuated only by clockwise rotation of switch arm **25**.

When the mechanism has returned to its normal position switch **36** is energized and the conveyor is started again to bring the next bottle to the disgorging station. Meanwhile, the disgorged bottle proceeds along flat bar **5** and conveyor **1** and is shunted from its offset position to a position entirely on conveyor **1**.

In the return line **75** of cylinder **65** there is provided a dumping valve **76** of the type that permits free flow from the cylinder **65** but normal flow toward the cylinder **62**. By this arrangement the fast action of the cylinder **65** is insured so that the decrowning operation can be performed immediately upon reversal of the housing **15** from its disgorging position.

Despite the disgorging of the frozen plug there sometimes remains frozen particles of the plug within the bottle neck. To insure complete removal of all such particles additional disgorging is achieved by impacting the sidewall of each bottle thus enhancing bubbling of the contents and continuing the disgorging after the bottles have been returned to their upright positions. This impacting step is conveniently achieved by means of a hammer head **77** adjustably secured at a point along the length of an elongated rod **78** which is pivotally supported at its upper end on pivot pin **79** in extension **71** of housing **15**.

Upon return of the housing to the dotted line position of FIG. **3** the pendulum action of rod **78** and head **77** causes the latter to strike the sidewall of the bottle with sufficient impact to cause considerable bubbling of the contents and the desired additional disgorging. A set screw **80** permits the head **77** to be positioned at the most desirable point along the length of rod **78** to provide the desired bubbling of the contents of the bottle.

It will be understood that the disgorged material received in container **10** may be collected and employed for certain purposes not pertinent to the present invention. To this end any suitable drain pipe (not shown) may be connected to container **10** for conveying the disgorged material to another receptacle.

I claim:

1. A disgorger for removing the contents of the neck of a vertically disposed capped bottle comprising:
- means for tilting said bottle from an upright position to a position with the axis of said bottle inclined at an acute angle to the vertical,
- means for removing the cap from said bottle to permit the contents of the bottle neck to be disgored without discharging the major portion of the contents of the bottle, and
- impact means for tapping said bottle to provide additional disgorging.

2. A disgorger according to claim **1** wherein said impact means is carried by said tilting means and is in the form of a free swinging pendulum.

3. A disgorger for removing the contents of the neck of upright capped bottles comprising:
- conveyor means for conveying upright capped bottles along a horizontal path of travel in one direction,
- tilting means at a point along said path for successively tilting each bottle from an upright position to a position inclined at an acute angle to the vertical,
- decrowning means for removing the cap from each bottle while the latter is so tilted, and
- means responsive to the presence of a bottle at said point for actuating said tilting means.

4. A disgorger according to claim **3** wherein means is provided for stopping said conveyor when a bottle is at said point, said conveyor stopping means being actuated by said means responsive to the presence of a bottle at said point.

5. A decrowner for removing the crown cap from a generally upright bottle comprising:
- an arm provided with a cap engaging hook at one end,
- means for swinging said arm about the edge of said cap opposite the point engaged by said hook,
- pivot means outwardly of said edge for pivotally supporting said arm for additional swinging movement of said hook, and
- tilting means for tilting said bottle from the vertical while said cap is removed.

6. A decrowner according to claim **5** wherein said tilting means includes a housing on which said arm is supported and said housing and arm being arranged to cause the upper side of said cap to abut the underside of said arm when said housing is so tilted.

7. A decrowner according to claim **5** wherein said tilting means is provided with a weighted pendulum depending therefrom with the weight of said pendulum adapted to strike said bottle upon return of said tilting means to a position with said bottle vertical.

* * * * *