(12)UK Patent Application (19)GB (11) 2 051 702 A

(21) Application No 8016886
(22) Date of filing
22 May 1980
(30) Priority data
(31) 79/18247
(32) 24 May 1979
(33) United Kingdom (GB)
(43) Application published
21 Jan 1981
(51) INT CL³ B62B 5/02
(52) Domestic classification
B7D X3
(56) Documents cited
GB 1472072
GB 1046444
GB 693983

(54) Wheel chair safety device

(57) In a safety device for a wheel chair or the like wherein a castor (17) mounted on a trailing arm (16) projects behind the chair rear wheel, energy storage means (20) is provided to store energy as the arm is urged upwardly with respect to the carriage structure (15) due to backward tipping of the carriage and to force the castor (17) onto the ground to provide an upward reaction to assist in raising the rear

ERRATUM

SPECIFICATION NO 2051702A

Front page, heading (74) Agents
delete P. BLOCKWOOD *insert* P. B. LOCKWOOD

THE PATENT OFFICE
26 June 1981

FIG. 2.

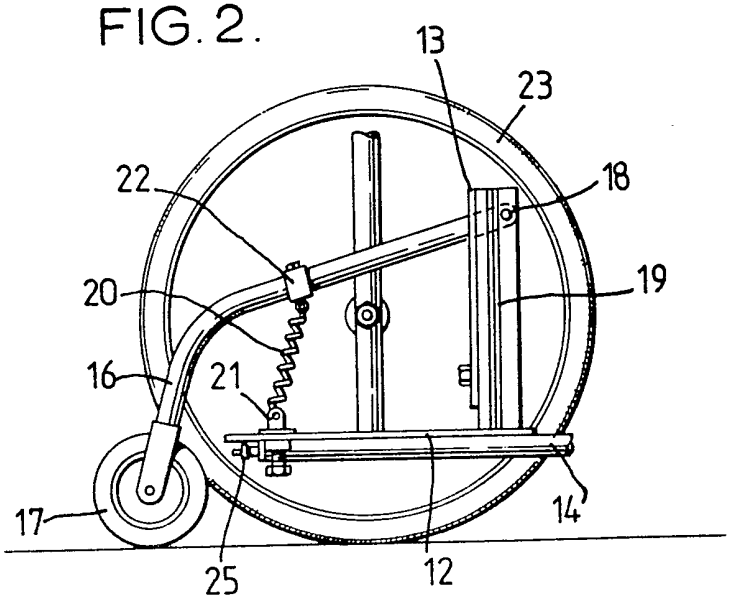

GB 2 051 702 A

(12) UK Patent Application (19) GB (11) 2 051 702 A

(21) Application No **8016886**
(22) Date of filing
22 May 1980
(30) Priority data
(31) **79/18247**
(32) **24 May 1979**
(33) **United Kingdom (GB)**
(43) Application published
21 Jan 1981
(51) **INT CL³ B62B 5/02**
(52) Domestic classification
B7D X3
(56) Documents cited
GB 1472072
GB 1046444
GB 693983
(58) Field of search
B7D
(71) Applicants
The Secretary of State for Defence
Whitehall
London
SW1A 2HB
(72) Inventors
Carl Robson Hamilton
Brian Mootealoo
Bernard Arthur Thomas
(74) Agents
P Blockwood

(54) Wheel chair safety device

(57) In a safety device for a wheel chair or the like wherein a castor (17) mounted on a trailing arm (16) projects behind the chair rear wheel, energy storage means (20) is provided to store energy as the arm is urged upwardly with respect to the carriage structure (15) due to backward tipping of the carriage and to force the castor (17) onto the ground to provide an upward reaction to assist in raising the rear of the carriage, as for example in raising the carriage onto the high side of a stepped obstacle.

The arm (16) further acts to prevent tipping to a degree where stability is lost.

FIG. 2.

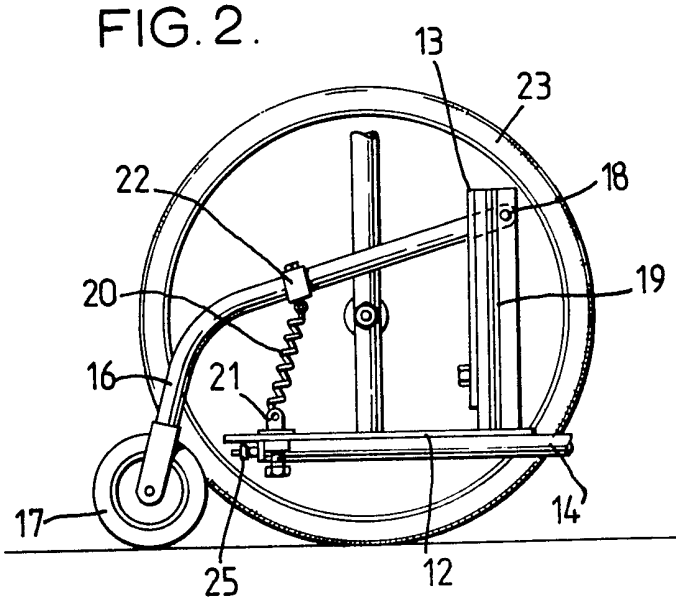

GB 2 051 702 A

SEE ERRATA SLIP ATTACHED

FIG. 1.

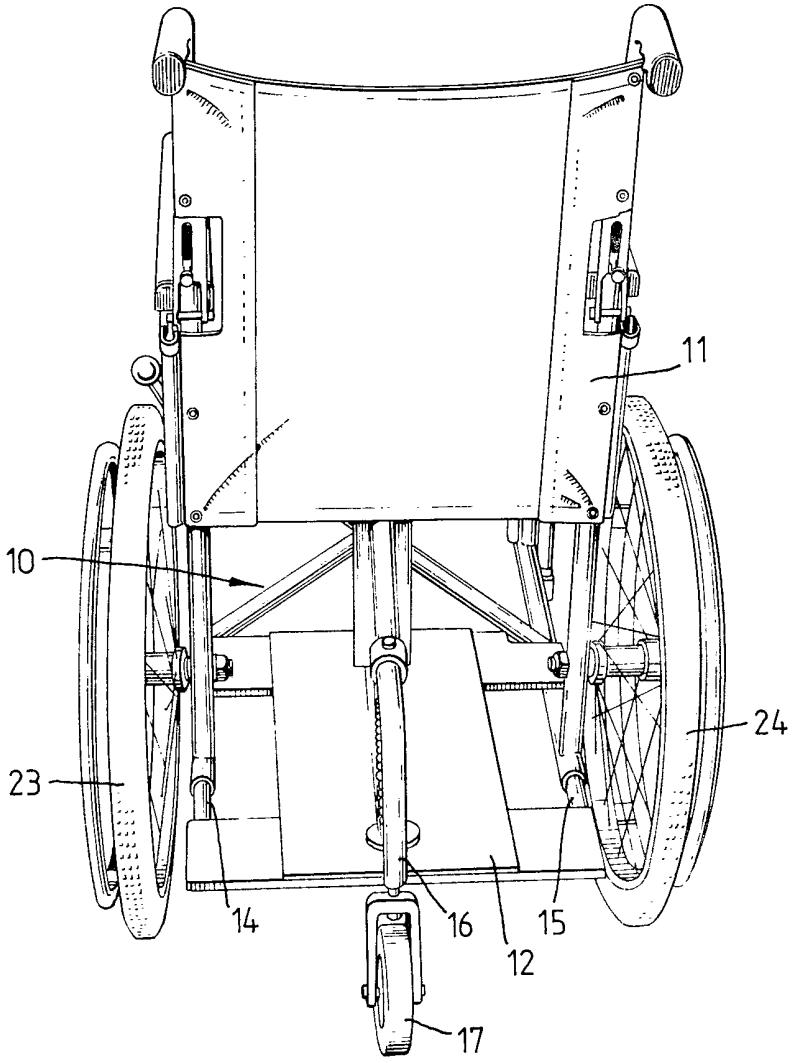

2051702

FIG. 2.

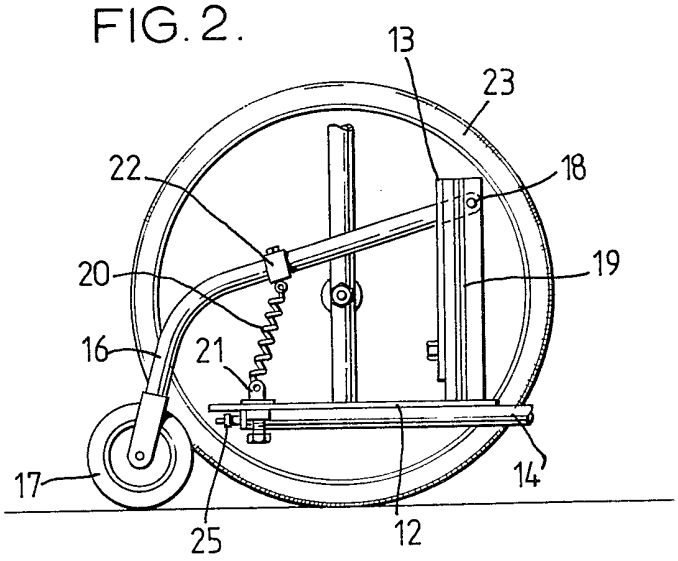

FIG. 3.

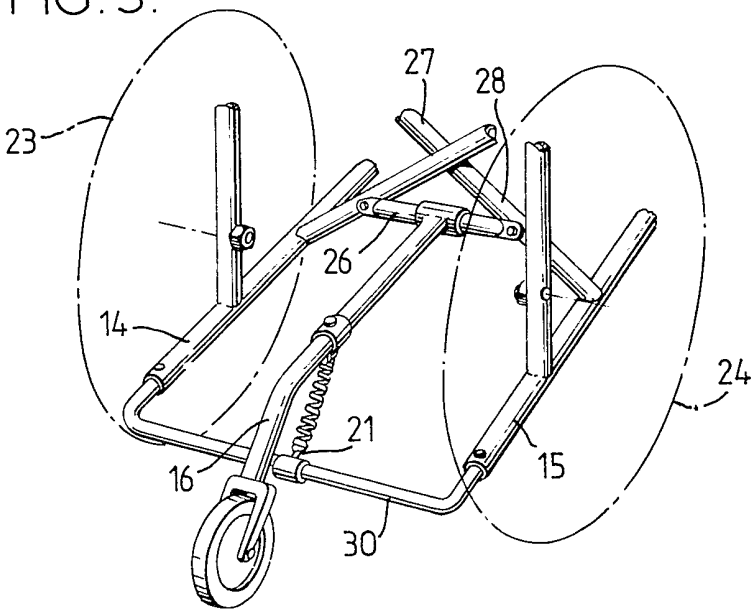

FIG. 4.

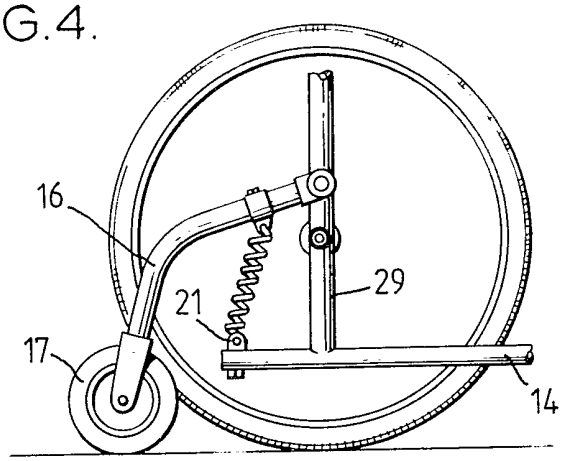

SPECIFICATION

Improvements in or relating to safety devices for carriages for chairs and other structures

Carriages which are designed for use on substantially flat surfaces can be awkward and dangerous when negotiating stepped obstacles, such as kerbs. For example, a standard kerbstone may represent an effective barrier to a wheel chair and impose an undue restriction on the freedom of an unassisted occupant.

A conventional wheel chair comprises a foldable chassis to which wheels are attached to form a carriage to support the chair structure. Two wheels at the rear have driving rails attached and are large enough to be reached easily by the occupants so that the chair may be propelled. Two forward wheels are of much smaller radius and mounted on swivels to act as castors.

An experienced occupant may be able to negotiate a kerb or step without assistance by manoeuvring the chair normally towards the kerb and making a rearward weight transfer to tip the chair backwardly to enable the front wheels to be placed on the high side of the kerb as the chair is propelled forwards. The chair may now be made to ascend the kerb by applying foward motion to the rear wheels. However, this technique is of no use to those without the strength or resolution to attempt the difficult manoeuvre and the potentially tragic consequences of a chair tipping over backwards weighs heavily against its use. Unfortunately instances of chairs tipping over backwards and resulting in injuries to the occupant are fairly common.

Descent from a kerb is also an awkward and dangerous manoeuvre. The chair is propelled forwardly over the edge of the kerb. If the drop of the kerb is large there is a danger of the chassis striking the kerb and pivoting the occupant of the chair forward.

Many occupants of wheel chairs find that they lack the strength to negotiate kerbs and steps and it is an object of the present invention to provide a device which will allow such people greater freedom.

According to the present invention a safety device for a carriage for a chair or other structure includes:

a flexibly mounted trailing castor and means arranged to store energy as the carriage is tipped to urge the castor upwardly with respect to the carriage and to force the castor onto the ground to provide an upward reaction to assist in raising the carriage.

Preferably the castor is mounted at the outboard end of a backwardly projecting arm.

It will be realised that the backwardly projecting arm and castor wheel act to stabilise the carriage. A hard stop may advantageously limit upward movement of the arm to prevent overbalancing due to backward tipping of the chair.

It will further be realised that energy stored as the arm is urged upwardly due to backward tipping of the carriage as, for example, in preparation for raising the carriage onto the high side of a kerb or step, is released as the castor is forced onto the ground to assist in raising the rear of the carriage and that the force required to propel the carriage up the kerb or step is thereby reduced.

The backwardly projecting arm may advantageously be pivotedly mounted on a rigid member secured to the chassis of the carriage and the means for storing energy may comprise a spring. Alternatively, the arm may be composed of sections which slide one in aother telescopically and the means for storing energy rely on the reaction to compression of a fluid. A further alternative is for the arm to be pivoted on a torsionally sprung mounting.

In order that features and advantages of the present invention may be fully understood and appreciated embodiments of the present invention will now be described by way of example only with reference to the accompanying diagrammatic drawings of which:

Figure 1 represents a wheel chair including a safety device in accordance with the present invention

Figure 2 represents a safety device

Figures 3 and 4 represent alternative arrangements

A wheel chair carriage (Fig. 1) has a foldable chassis 10 with rear wheels 23 and 24 to support chair structure 11. A safety device in accordance with the present invention has a base plate 12 rigidly secured to tubes 14 and 15 extending rearwardly from the chassis 10.

The safety device has a backwardly projecting arm 16 having a castor wheel 17 mounted thereon. The arm 16 is pivotedly mounted at 18 (Fig. 2) on a supporting member 19 projecting from the base plate 12. The plate 12 is secured to the tubes 14 and 15 by pins, such as pin 25. As the wheel chair carriage is tipped backwardly a spring 20 secured to a lower mounting 21 on the base plate 12 and an upper mounting 22 on the arm 16 is tensioned to store energy as the arm 16 is urged upwardly with respect to the chassis 10, pivoting at 18. The spring 20 forces the castor 17 onto the ground to provide an upward reaction to assist in raising the rear of the chair, as for example the chair is propelled onto the high side of a kerb or step.

Adjustments may be made to the force provided by the spring by altering the height of the lower spring mounting 21 or by sliding the upper spring mounting 22, which is in the form of a collar, along the arm 16. In this way the assistance provided by the safety

device may be tailored to suit a particular occupant. A hard stop 23 prevents over extension of the spring 20 and excessive backward tipping of the chair which may result in overbalancing.

In another embodiment of the present invention (Fig. 3) a rear tube 25 is secured between the rearwardly extending tubes 14 and 15 to provide a lower spring mounting 21. The arm 16 is pivotedly mounted to a supporting member 26 rigidly secured to cross tubes 27 and 28 of the chassis 10.

In an alternative embodiment of a safety device in accordance with the present invention the arm 16 is pivotedly mounted on a vertically extending member 29 of the chassis 10 (Fig. 4). The lower spring mounting 21 is secured to the rear portion of the rearwardly extending tube 14. It will be realised by those skilled in the art that another safety device may be similarly mounted on the other rearwardly extending tube 15. It will further be realised that this arrangement is advantageous if the chair is to be folded or pushed by an assistant to the occupant.

It will be appreciated that the embodiments of the invention described above provide assistance to those otherwise unable to mount kerbs and steps. Descending a kerb may also be achieved safely by approaching the kerb rearwards—the arm 16 preventing any possibility of tipping backwardly. Other obstacles such as ramps may also be negotiated with confidence.

CLAIMS

The matter for which the applicant seeks protection is:

1. A safety device for a carriage for a chair or other structure including a flexibly mounted trailing castor and means arranged to store energy as the carriage is tipped to urge the castor upwardly with respect to the carriage and to force the castor onto the ground to provide an upward reaction to assist in raising the carriage.

2. A safety device as claimed in claim 1 and wherein the trailing castor is mounted on a projecting arm.

3. A safety device as claimed in claim 1 or claim 2 and wherein the movement of the castor is limited by a hard stop.

4. A safety device as claimed in claim 2 or claim 3 and wherein the projecting arm is pivotedly mounted on a rigid member secured to the carriage.

5. A safety device as claimed any one preceding claim and wherein the means for storing energy includes a spring.

6. A safety device as claimed in any one preceding claim and wherein the force provided by the means for storing energy is adjustable.

7. A safety device substantially as herein described with reference to the accompanying drawings.

Printed for Her Majesty's Stationery Office
by Burgess & Son (Abingdon) Ltd.—1981.
Published at The Patent Office, 25 Southampton Buildings,
London, WC2A 1AY, from which copies may be obtained.