H. P. NORDMARK.

TYPEWRITING MACHINE.

APPLICATION FILED DEC. 26, 1917.

1,337,563.

Patented Apr. 20, 1920.

7 SHEETS—SHEET 1.

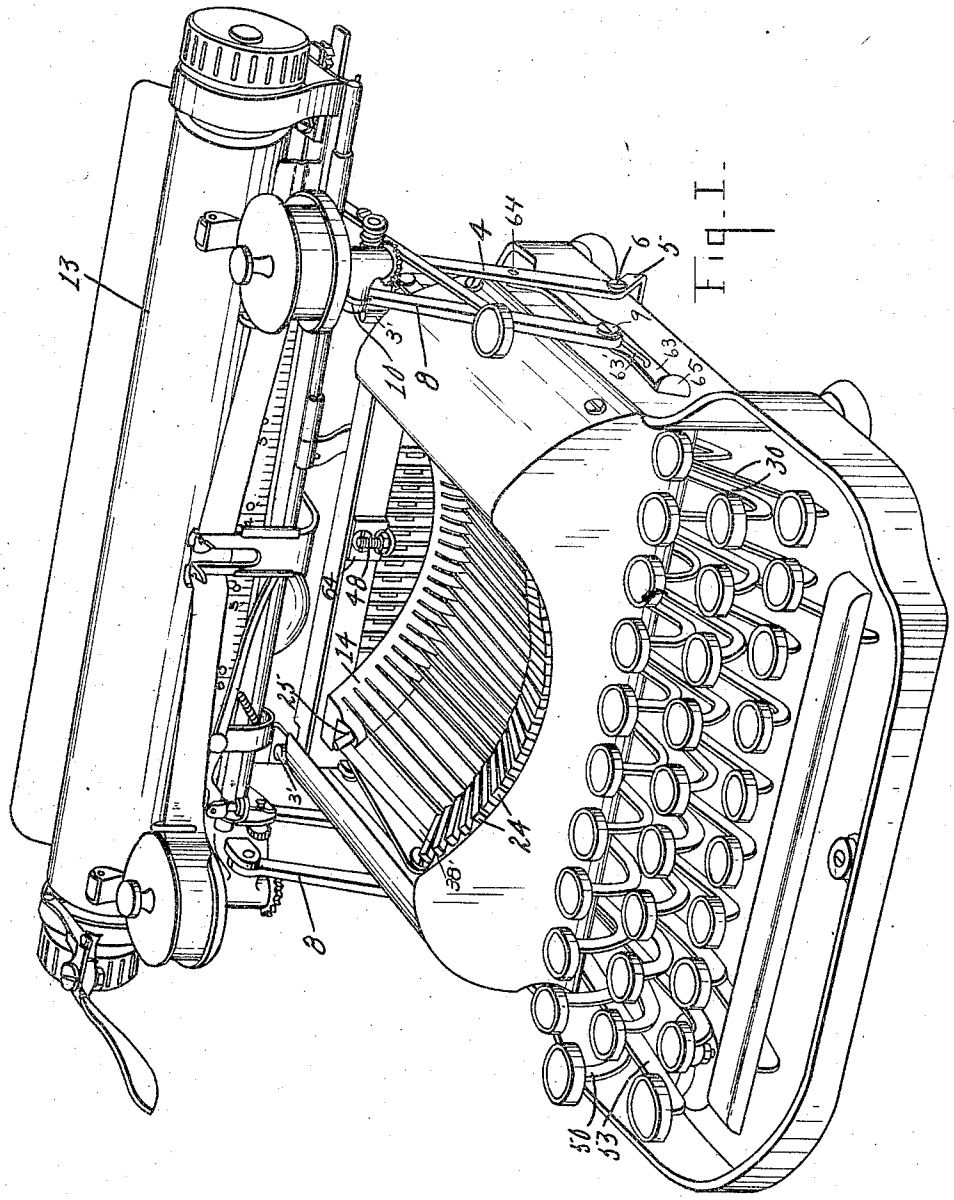

Fig. 1.

Inventor
HENRY P. NORDMARK

Witnesses
Lem Gilman
M. Louise Thurston

By Chappell & Earl
Attorneys

H. P. NORDMARK.

TYPEWRITING MACHINE.

APPLICATION FILED DEC. 26, 1917.

1,337,563.

Patented Apr. 20, 1920.

7 SHEETS—SHEET 2.

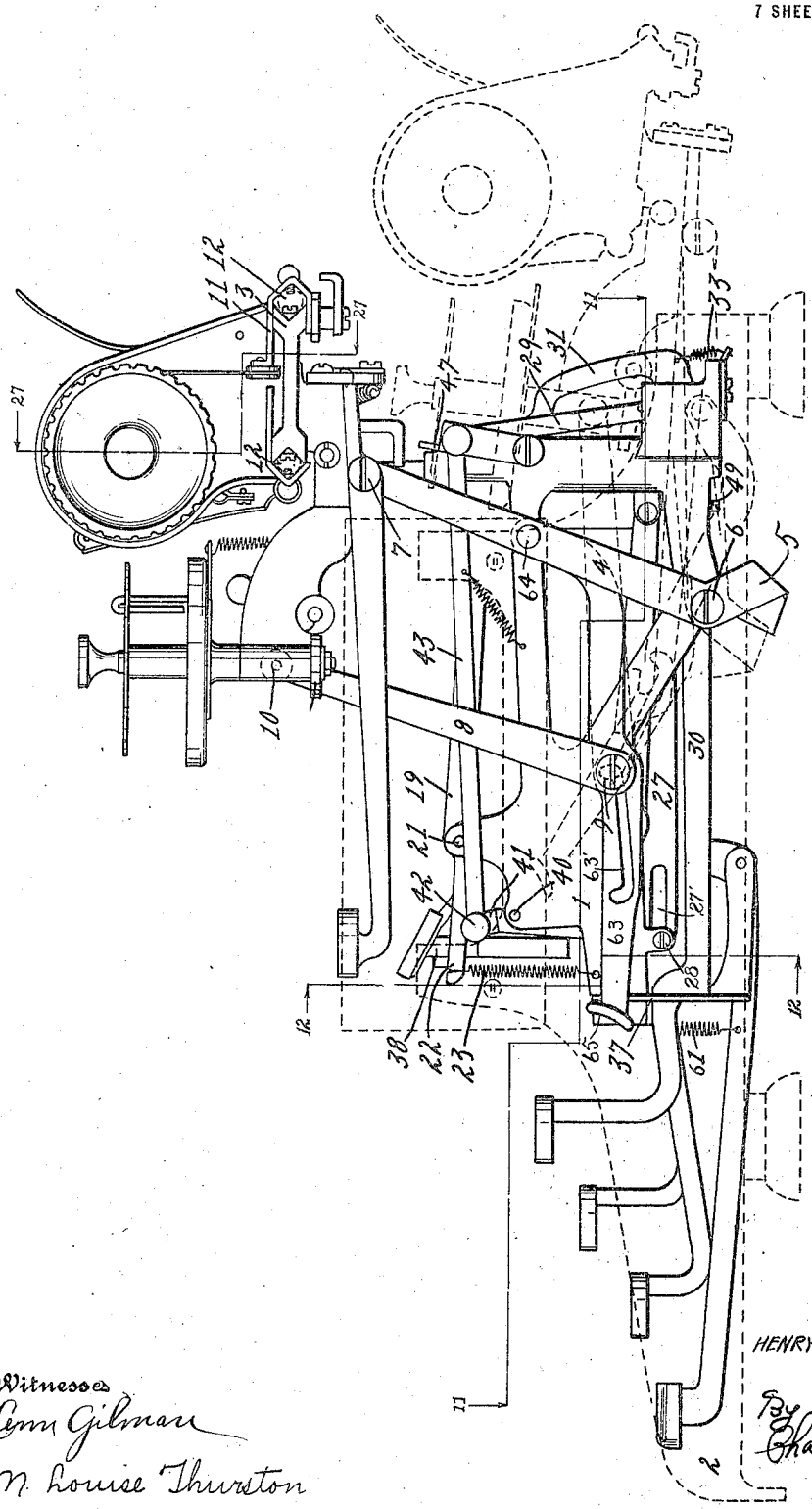

Fig. II.

Witnesses
Lenn Gilman
M. Louise Thurston

Inventor
HENRY P. NORDMARK

By Chappell & Earl
Attorneys

H. P. NORDMARK.

TYPEWRITING MACHINE.

APPLICATION FILED DEC. 26, 1917.

1,337,563.

Patented Apr. 20, 1920.

7 SHEETS—SHEET 3.

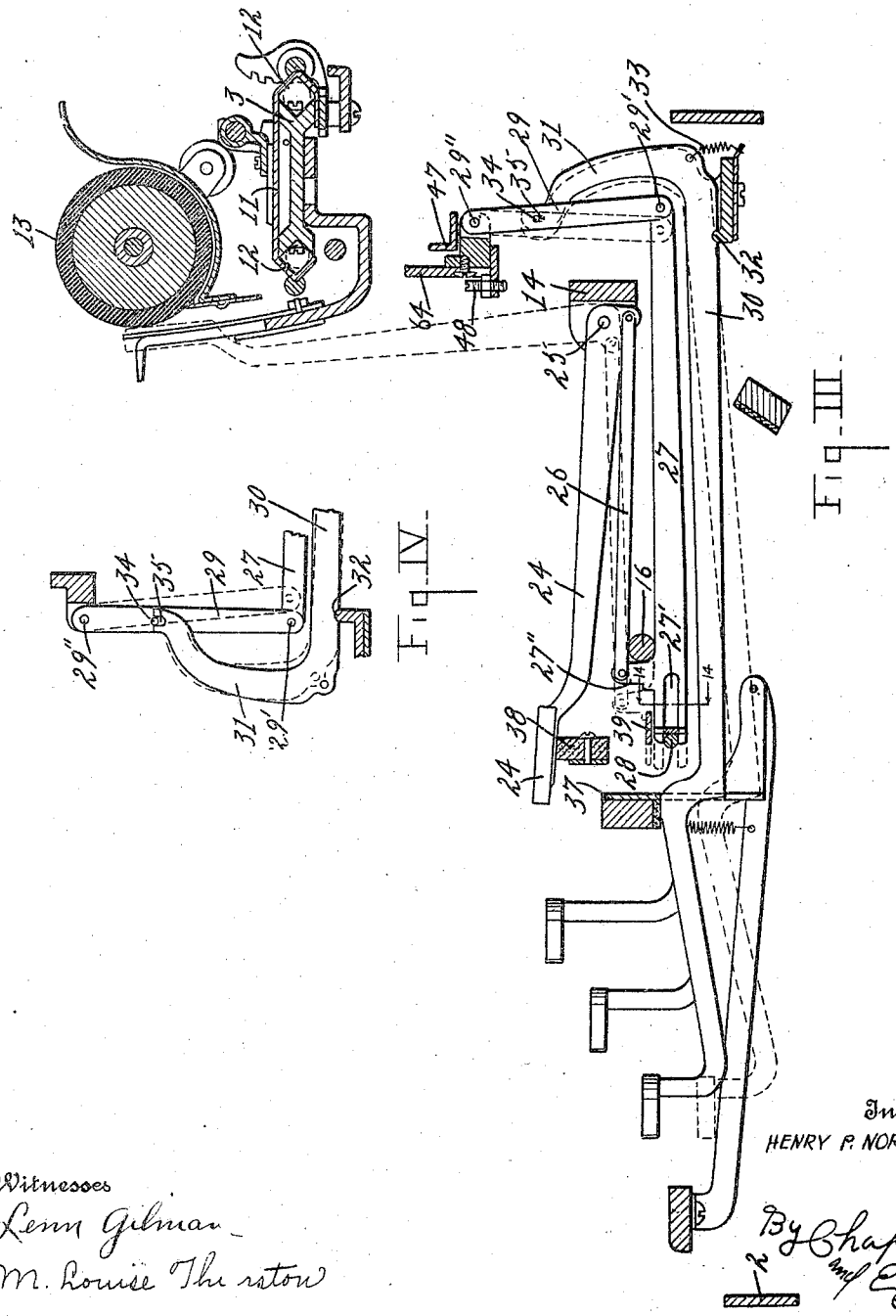

Fig. III.

Fig. IV.

Witnesses

Lenn Gilman

M. Louise Thurston

Inventor

HENRY P. NORDMARK

By Chappell and Earl

Attorneys

H. P. NORDMARK.

TYPEWRITING MACHINE.

APPLICATION FILED DEC. 26, 1917.

1,337,563.

Patented Apr. 20, 1920.

7 SHEETS—SHEET 4.

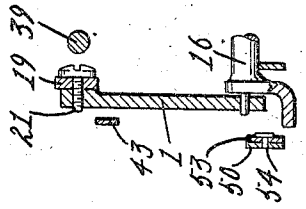

Fig. VIII.

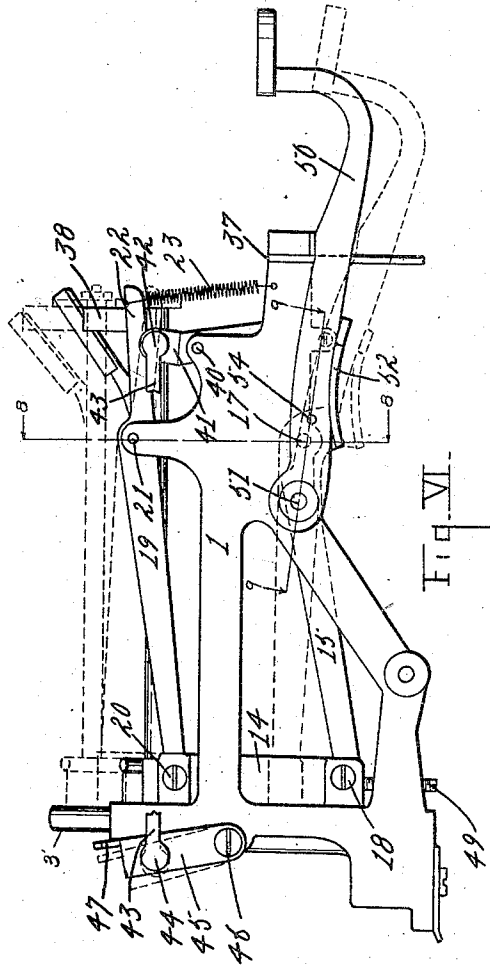

Fig. VI.

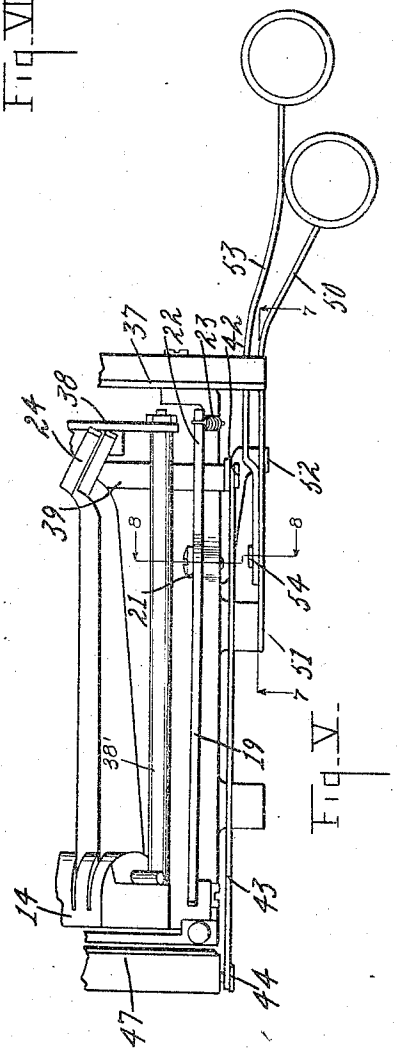

Fig. V.

Witnesses

Lenn Gilman

M. Louise Thurston

Inventor

HENRY P. NORDMARK

By Chappell & Earl

Attorneys

H. P. NORDMARK.

TYPEWRITING MACHINE.

APPLICATION FILED DEC. 26, 1917.

1,337,563.

Patented Apr. 20, 1920.

7 SHEETS—SHEET 5.

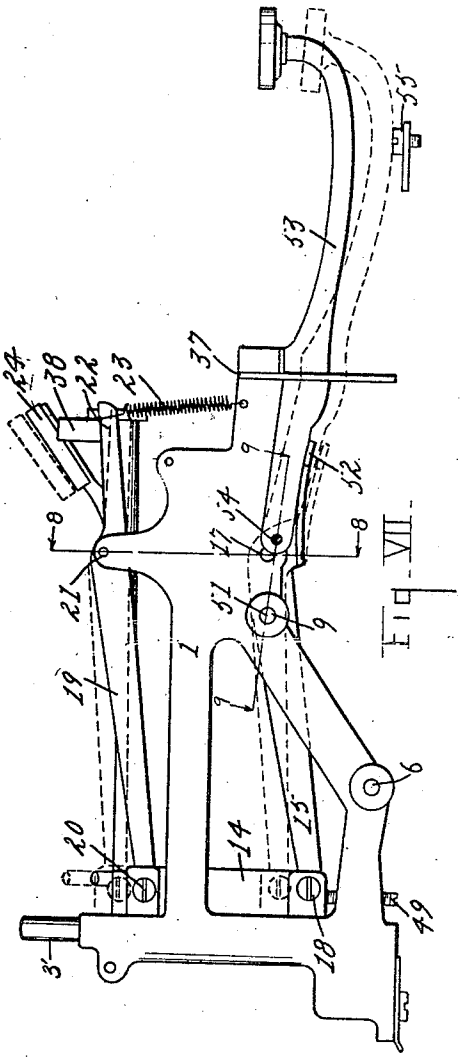

Fig. VII.

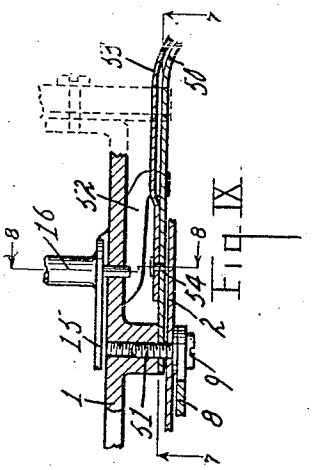

Fig. IX.

Inventor

HENRY P. NORDMARK

Witnesses

Lenn Gilman

M. Louise Thurston

By Chappell & Earl

Attorneys

H. P. NORDMARK.

TYPEWRITING MACHINE.

APPLICATION FILED DEC. 26, 1917.

1,337,563.

Patented Apr. 20, 1920.

7 SHEETS—SHEET 6.

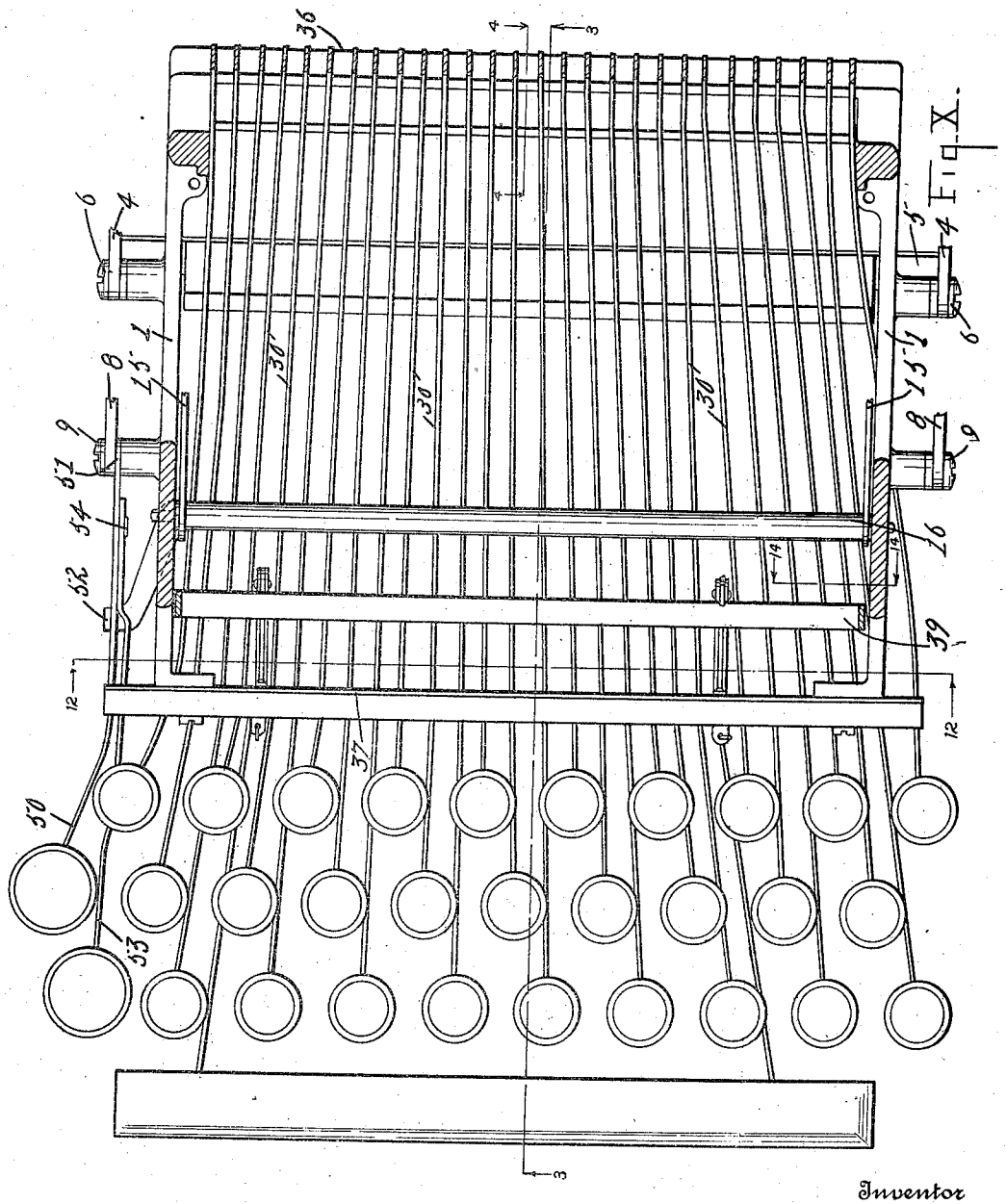

Fig. X.

Inventor
HENRY P. NORDMARK

Witnesses
Lenn Gilman
M. Louise Thurston

By Chappell & Earl
Attorneys

H. P. NORDMARK.

TYPEWRITING MACHINE.

APPLICATION FILED DEC. 26, 1917.

1,337,563.

Patented Apr. 20, 1920.

7 SHEETS—SHEET 7.

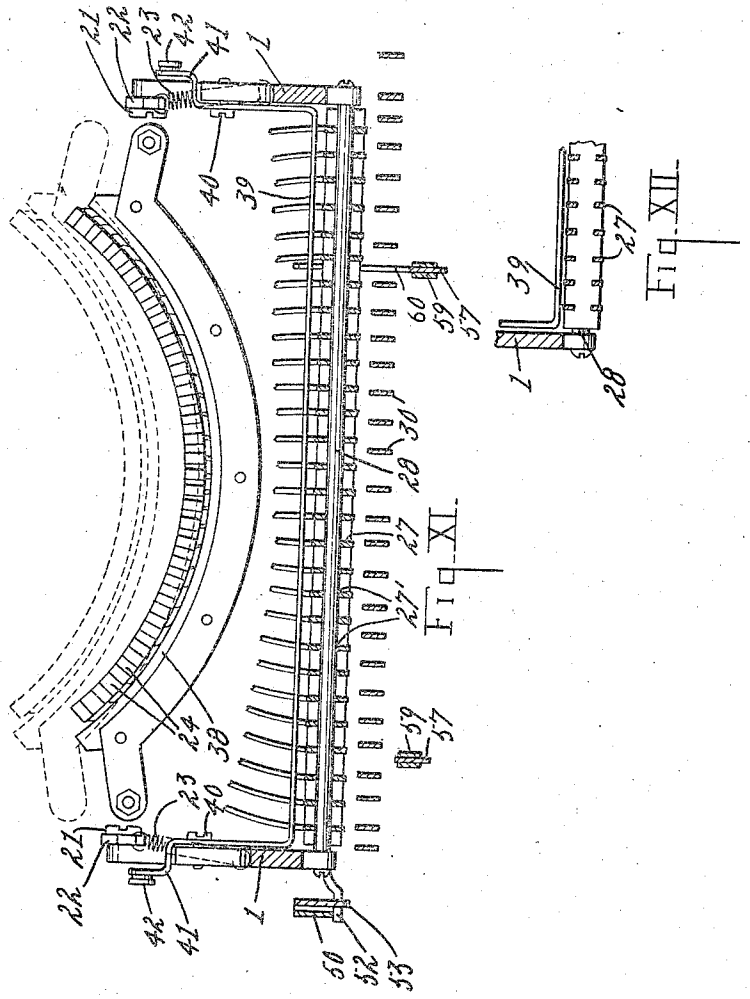

FIG. XI.

FIG. XII.

Witnesses

Lenn Gilman

M. Louise Thurston

Inventor

HENRY P. NORDMARK

By Chappell Hall

Attorney

UNITED STATES PATENT OFFICE.

HENRY P. NORDMARK, OF GRAND RAPIDS, MICHIGAN, ASSIGNOR TO FOX TYPEWRITER CO., OF GRAND RAPIDS, MICHIGAN.

TYPEWRITING-MACHINE.

1,337,563. Specification of Letters Patent. Patented Apr. 20, 1920.

Application filed December 26, 1917. Serial No. 208,774.

To all whom it may concern:

Be it known that I, HENRY P. NORDMARK, a subject of the King of Norway, residing at Grand Rapids, Michigan, have invented certain new and useful Improvements in Typewriting-Machines, of which the following is a specification.

This invention relates to improvements in typewriting machines.

The objects of the invention are:

First, to provide an effective practical collapsible typewriter which can, when being transported, be stored in very compact space.

Second, to provide an improved key action especially adapted to such collapsible typewriter.

Third, to provide an improved shift key mechanism especially adapted to such typewriters.

Further objects, and objects relating to details and economies of operation and construction will definitely appear from the detailed description to follow. Many of the improvements and objects and features are applicable to other styles of typewriters, but are especially applicable to the collapsible typewriter.

I accomplish the objects of my invention by the devices and means described in the following specification. The invention is clearly defined and pointed out in the claims.

A structure containing a preferred embodiment of my invention is fully illustrated in the accompanying drawing forming a part of this specification, in which:

Figure I is a perspective view of my improved typewriter, with the typewriter carriage and parts in operative position.

Fig. II is a side elevation, practically full size, of my improved typewriter with the outer casing removed, taken from the right hand side of Fig. I, the collapsed position of the carriage and platen being indicated by dotted lines and the general position and arrangement of the frame being also indicated in skeleton lines.

Fig. III is a detail longitudinal sectional view through my improved typewriter, showing the typebar action in its relation to the carriage and platen and frame, and also the spacer bar, the same being taken on a line corresponding to line 3—3 of Fig. X, depressed position being indicated by dotted lines.

Fig. IV. is a detail sectional view of the rear end connection of the typebar action, taken on a line corresponding to line 4—4 of Fig. X, the depressed position of the action being indicated by dotted lines.

Fiv. V is a detail plan view of the type segment shift levers and supports 15.

Fig. VI is a side elevation view of the figure shift lever and parts appearing in Fig. V, the said figure shift key being shown in full lines and dotted in shifted position, the "cap" shift being omitted.

Fig. VII is a similar detail sectional elevation view showing the "cap" shift lever only in full lines and dotted in depressed position, the same being taken on line 7—7 of Figs. V and IX.

Fig. VIII is a detailed sectional view taken on a line corresponding to line 8—8 of Figs. V, VI, VII and IX, showing the details of construction and the connection of the said shift levers.

Fig. IX is a detail sectional view taken on a line corresponding to line 9—9 of Figs. VI and VII, showing details of the said parts.

Fig. X is a detail sectional plan view taken on the irregular section line 11—11 of Fig. II.

Fig. XI is a detail transverse vertical sectional view taken on a line corresponding to line 12—12 of Figs. II and X.

Fig. XII is a detail sectional view on line 14—14 of Figs. III and X, showing the guide support for the slide bar of the key action and the disposition and arrangement of the universal bar action above the same.

In the drawings similar numerals of reference refer to similar parts throughout the several views, and the sectional views are taken looking in the direction of the little arrows at the ends of the section lines.

Considering the numbered parts of the drawing, the main frame 1, which carries the remaining parts, is incased in an outer protective casing 2 which extends about the front of the machine as a guard for the keyboard.

A collapsible carriage support 3 is supported by a pair of arms 4 carried by the cross bar 5, which is pivoted by the screw 6 on the outside of the case, the screw extending through a perforation in the casing into the frame within. The upper end of

the arm 4 is pivoted to a suitable bracket on the underside of the carriage support at 7. A link 8 at each side of the carriage is parallel to the arm 4 and is pivoted on the pivot screw 9 which extends through the case into the frame and is secured to a forwardly projecting arm from the carriage support at 10, the upper end of each link 8 being offset toward the front of the machine. The pair of arms have a pivoted movement and the carriage has a tilting movement and may be swung down in the tilted position indicated by the dotted lines in Fig. II.

The carriage 11 is supported on suitable ways which are ball races 12. The typewriter platen 13 is supported on the carriage at the usual writing position. The details of these parts will be described farther on.

The type bar segment 14 is made shiftable up and down to cause the type to operate after the well-known principle of a front strike typewriter with a shiftable type segment. The type segment 14 is supported by a pair of rock shaft arms 15 on the rock shaft 16 (see Figs. VI and X). The rock shaft is fulcrumed at 17 and the rear ends of the arms are pivoted at 18 to the type bar segment frame. A pair of parallel links 19 are disposed above the rock shaft arms 15, and parallel thereto, and are pivoted at 20 at their rear ends to the type segment frame and are fulcrumed at 21 at their forward ends. The forward ends of the links 19 are extended into arms 22 which are connected by counterbalance spring 23 to the frame for maintaining the type segment and the type basket in proper equilibrium for easy manipulation by the shift keys.

The type bars 24, which are here provided each with three types, are pivoted at 25 on the type segment and their short lever ends are connected by links 26 to the slide bars 27, which are disposed and arranged to slide on the front cross rod 28, the slide bars 27 being slotted at 27′ for that purpose. The rear end of each slide bar 27 is supported by a swinging link 29 which is connected thereto by pivot 29′ and pivotally supported above at 29″.

Each key lever 30 is provided with an upwardly projecting arm 31, being fulcrumed at 32 and provided with return spring 33 (see Fig. III). The upwardly projecting arm 31 is provided with an actuating pin 34, engaging in a vertical slot 35 in the swinging link 29. The rear ends of the key levers are disposed in guide combs 36 and a front guide comb 37 is provided just in front of the type basket.

The type basket or support 38 is supported by a pair of arms 38′ (see Figs. III and V), so that the whole may be shifted to move the type to the proper printing relation. It will be seen that when the key lever 30 is depressed, it turns on fulcrum 32, throwing the short arm 31 forward, which swings the link 29, reciprocating the slide or push bar 27 forwardly, thereby acting upon the type bar and causing it to swing to printing position. Because the links 26 are horizontal, the type basket or support may be readily shifted by means hereinafter to be described.

The front ends of the bars 27 are provided with upwardly projecting lugs 27″ for actuating the universal bar 39. The universal bar mechanism or action comprises the universal bar 39 which is suspended by arms 39′ from the pivot 40 at each side of the frame 1. These arms extend upwardly at 41 and are connected by links 43 which are pivotally connected thereto at 42 to an actuating bar 47 at the rear by the pivot 44, the actuating bar 47 being supported by the downwardly depending arms 45 which are pivoted to the frame at 46, so that, whenever the universal bar 39 is actuated, it turns with this motion the actuating bar 47 at the rear of the machine. The actuating bar 47 is preferably formed of an angular sheet metal to increase its rigidity and retain it in supporting position.

Stop 48 is provided (see Fig. I) to limit the upward throw of the type bar segment and a pair of stops 49 (see Fig. VII) is provided to limit the downward movement, these stops being screw threaded and adjustable to permit of proper and fine adjustment of the location of the elevation of the type bar segment on the limit of its movement. The upper position of the type bar segment is a position for printing the figures and similar characters. This is controlled by the lever 50 which is fulcrumed at 51 on the pivot screw 9 to which the carriage supporting link is also pivoted.

An arm 52 is secured to the rock shaft arm 15 and extends forwardly of the rock shaft pivot 17 and affords means for the application of the force of this shift lever 50 which elevates the type segment to the maximum position in contact with the stop 48.

The "cap." shift lever 53 is pivoted at 54 to the side of the "fig." shift 50 and extends beyond the same across the arm 52, and an adjustable stop 55 is provided underneath the same to limit its throw to the central position so that the central types on each type bar will be printed when this "cap." lever is depressed. Thus it will be seen that the matter of shifting the type bar segments is provided for.

The carriage frame is held in its elevated position by the locking pull bar 63 (see Fig. II), which is pivoted at 64 to the arm 4 and is provided with a slot 63′ which plays upon the shank of the pivot screw 9. The slot 63′ has locking notches at each end which

engage the pivot screw 9, and lock the carriage supporting arm 4 in both the normal and collapsed position. This pull bar 63 is provided with a finger piece 65 whereby the carriage supports may be pulled forward and the locking pull bar be depressed and the parts will be effectively locked with the carriage support 3 against stop pins 3'. A pull bar is preferably provided on each side.

The bar 5 which extends beneath the machine holds the arms 4 in rigid parallel relation with each other, and when the carriage is collapsed in position indicated by the dotted lines in Fig. II this bar swings into contact with the under side of the keys and locks the same so that they cannot be manipulated when the carriage is out of printing position.

I have described my improved structure in its preferred embodiment, but I desire to state that the same can be greatly varied without departing from my invention. I will not attempt to describe such variations, as they are sufficiently indicated by the specific and broad claims which I have herewith submitted.

Having thus described my invention, what I claim as new and desire to secure by Letters Patent is:

1. In a typewriting machine, the combination with a main frame, of a shiftable type bar segment disposed therein, with horizontally disposed link structures connected to and disposed to actuate the type bars, a carriage support having ways therein, a carriage with platen devices, mounted on said support with escapement means carried by the said support for feeding the carriage, a pair of supporting arms pivoted to the lower rear portions of said frame and extending upwardly and rearwardly and connected by pivots at their upper ends to the under side of the carriage support, a connecting bar between said supporting arms and below the lower pivot thereof, conformed and disposed to engage and lock the key levers of the typewriter when the arms are swung to the rear, a pair of pivoted arms pivoted to the sides of said frame in front of and above the pivots for the supporting arms, pivotally connected to forwardly projecting arms or brackets on the carriage support, the distance between the pivots on the carriage support being greater than the distance between the pivots on the carriage frame, a locking pull bar with finger pieces in front, pivoted to the upper part of each of the said supporting arms and containing a slot arranged and disposed to engage the lower pivot pin of the supporting arm, the said slot being provided with locking notches at each end, and stops against which the carriage support contacts when in the elevated position, whereby the typewriter can be collapsed by swinging the carriage support downwardly and rearwardly back of the main frame of the typewriter, and can be swung into operative position above the same and locked by means of said pull bars, as described.

2. In a typewriting machine, the combination with a main frame, of a shiftable type bar segment disposed therein, with horizontally disposed link structures connected to and disposed to actuate the type bars, a carriage support having ways therein, a carriage with platen devices, mounted on said support with escapement means carried by the said support for feeding the carriage, a pair of supporting arms pivoted to the lower rear portions of said frame and extending upwardly and rearwardly and connected by pivots at their upper ends to the under side of the carriage support, a connecting bar between said supporting arms and below the lower pivot thereof, conformed and disposed to engage and lock the key levers of the typewriter when the arms are swung to the rear, a pair of pivoted arms pivoted to the sides of said frame in front of and above the pivots for the supporting arms, pivotally connected to forwardly projecting arms or brackets on the carriage support, the distance between the pivots on the carriage support being greater than the distance between the pivots on the carriage frame, and locking means for locking the said carriage support in the elevated position, as described.

3. In a typewriting machine, the combination with a main frame, of a shiftable type bar segment disposed therein, with horizontally disposed link structures connected to and disposed to actuate the type bars, a carriage support having ways therein, a carriage with platen devices, mounted on said support with escapement means carried by the said support for feeding the carriage, a pair of supporting arms pivoted to the lower rear portions of said frame and extending upwardly and rearwardly and connected by pivots at their upper ends to the under side of the carriage support, a pair of pivoted arms pivoted to the sides of said frame in front of and above the pivots for the supporting arms, pivotally connected to forwardly projecting arms or brackets on the carriage support, the distance between the pivots on the carriage support being greater than the distance between the pivots on the carriage frame, a locking pull bar with finger pieces in front, pivoted to the upper part of each of the said supporting arms and containing a slot arranged and disposed to engage the lower pivot pin of the supporting arm, the said slot being provided with locking notches at each end, and stops against which the carriage support contacts when in the elevated

position, whereby the typewriter can be collapsed by swinging the carriage support downwardly and rearwardly back of the main frame of the typewriter, and can be swung into operative position above the same and locked by means of said pull bars, as described.

4. In a typewriting machine, the combination with a main frame, of a shiftable type bar segment disposed therein, with horizontally-disposed link structures connected to and disposed to actuate the type bars, a carriage support having ways therein, a carriage with platen devices, mounted on said support with escapement means carried by the said support for feeding the carriage, a pair of supporting arms pivoted to the lower rear portions of said frame and extending upwardly and rearwardly and connected by pivots at their upper ends to the under side of the carriage support, a connecting bar between said supporting arms and below the lower pivot thereof, a pair of pivoted arms pivoted to the sides of said frame in front of and above the pivots for the supporting arms, pivotally connected to forwardly projecting arms or brackets on the carriage support, the distance between the pivots on the carriage support being greater than the distance between the pivots on the carriage frame, and locking means for locking the said carriage support in the elevated position, as described.

5. In a typewriting machine, the combination with a main frame, of a shiftable type bar segment disposed therein, with horizontally disposed link structures connected to and disposed to actuate the type bars, a carriage support having ways therein, a carriage with platen devices, mounted on said support with esapement means carried by the said support for feeding the carriage, a pair of supporting arms pivoted to the lower rear portions of said frame and extending upwardly and rearwardly and connected by pivots at their upper ends to the under side of the carriage support, a pair of pivoted arms pivoted to the sides of said frame in front of and above the pivots for the supporting arms, pivotally connected to forwardly projecting arms or brackets on the carriage support, the distance between the pivots on the carriage support being greater than the distance between the pivots on the carriage frame, and locking means for locking the said carriage support in the elevated position, as described.

6. In a typewriting machine, the combination of the main frame, a type bar segment disposed within the frame, a carriage support having ways therein, a carriage with platen devices and escapement means carried thereby, a pair of supporting arms pivoted to the lower rear portions of said frame and extending upwardly and rearwardly and connected by pivots at their upper ends to the under side of the carriage support, a connecting bar between said supporting arms and below the lower pivot thereof, conformed and disposed to engage and lock the key levers of the typewriter when the arms are swung to the rear, a pair of pivoted arms pivoted to the sides of said frame in front of and above the pivots for the supporting arms, pivotally connected to forwardly projecting arms or brackets on the carriage support, the distance between the pivots on the carriage support being greater than the distance between the pivots on the carriage frame, and means for locking the said carriage support in the elevated position, as specified.

7. In a typewriting machine, the combination of the main frame, a type bar segment disposed within the frame, a carriage support having ways therein, a carriage with platen devices and escapement means carried thereby, a pair of supporting arms pivoted to the lower rear portions of said frame and extending upwardly and rearwardly and connected by pivots at their upper ends to the under side of the carriage support, a pair of pivoted arms pivoted to the sides of said frame in front of and above the pivots for the supporting arms, pivotally connected to forwardly projecting arms or brackets on the carriage support, the distance between the pivots on the carriage support being greater than the distance between the pivots on the carriage frame, and means for locking the said carriage support in the elevated position, as specified.

8. In a typewriting machine, the combination with the main frame, of a type bar segment in said frame, a carriage support having ways therein, a carriage with platen devices mounted thereon, means of feeding the said carriage, inking devices associated with the type bars and platen, a pair of supporting arms pivoted to the sides of said frame and extending upwardly with pivotal connections to the said carriage support, a connecting bar between said supporting arms disposed below the said frame to engage and lock the keys of the typewriter when the arms are swung downwardly, and means for locking the support in elevated position, as specified.

9. In a typewriting machine, the combination with the main frame, of a type bar segment in said frame, a carriage support having ways therein, a carriage with platen devices mounted thereon, means of feeding the said carriage, inking devices associated with the type bars and platen, a pair of supporting arms pivoted to the sides of said frame and extending upwardly with pivotal

connections to the said carriage support, a connecting bar between said supporting arms disposed below the said frame to engage and lock the keys of the typewriter when the arms are swung downwardly, a pair of pivoted arms pivoted to the sides of said frame in front of and above the pivots for the supporting arms, pivotally connected to forwardly projecting arms or brackets on the carriage support, the distance between the pivots on the carriage support being greater than the distance between the pivots on the carriage frame, and means for locking the support in elevated position, as specified.

10. In a typewriting machine, the combination with the main frame, of a type bar segment in said frame, a carriage support having ways therein, a carriage with platen devices mounted thereon, means of feeding the said carriage, inking devices associated with the type bars and platen, a pair of supporting arms pivoted to the sides of said frame and extending upwardly with pivotal connections to the said carriage support, a connecting bar between said supporting arms disposed below the said frame, and means for locking the support in elevated position.

11. In a typewriting machine, the combination with a main frame, of a type bar segment in said frame, a carriage support having ways therein, a carriage with platen devices mounted thereon, means of feeding the said carriage, inking devices associated with the type bars and platen, a pair of supporting arms pivoted to the lower rear portions of said frame and extending upwardly and rearwardly and connected by pivots at their upper ends to the under side of the carriage support, a connecting bar between said supporting arms and below the lower pivot thereof, conformed and disposed to engage and lock the key levers of the typewriter when the arms are swung to the rear, a pair of pivoted arms pivoted to the sides of said frame in front of and above the pivots for the supporting arms, pivotally connected to forwardly projecting arms or brackets on the carriage support, the distance between the pivots on the carriage support being greater than the distance between the pivots on the carriage frame, a locking pull bar with finger pieces in front, pivoted to the upper part of each of the said supporting arms, and containing a slot arranged and disposed to engage the lower pivot pin of the supporting arm, the said slot being provided with locking notches at each end, and stops against which the carriage support contacts when in the elevated position, whereby the typewriter can be collapsed by swinging the carriage support downwardly and rearwardly back of the main frame of the typewriter, and can be swung into operative position above the same and locked by means of said pull bars, as described.

12. In a typewriting machine, the combination with a main frame, of a type bar segment in said frame, a carriage support having ways therein, a carriage with platen devices mounted thereon, means of feeding the said carriage, inking devices associated with the type bars and platen, a pair of supporting arms pivoted to the lower rear portions of said frame and extending upwardly and rearwardly and connected to pivots on the said carriage support, a pair of pivoted arms pivoted to the sides of the frame in front of and above the pivots for the supporting arms, and pivotally connected to forwardly projecting arms or brackets on the carriage support, a locking pull bar with finger pieces in front, pivoted to the upper part of each of the said supporting arms and containing a slot arranged and disposed to engage the lower pivot pin of the supporting arms, the said slot being provided with locking notches at each end, and stops against which the carriage support contacts when in the elevated position, whereby the typewriter can be collapsed by swinging the carriage support downwardly and rearwardly back of the main frame of the typewriter, and can be swung into operative position above the same and locked by means of said pull bars, as described.

13. In a typewriting machine, the combination with a main frame, of a type bar segment in said frame, a carriage support having ways therein, a carriage with platen devices mounted thereon, means of feeding the said carriage, inking devices associated with the type bars and platen, a pair of supporting arms pivoted to the lower rear portions of said frame and extending upwardly and rearwardly and connected to pivots on the said carriage support, a pair of pivoted arms pivoted to the sides of the frame in front of and above the pivots for the supporting arms, and pivotally connected to forwardly projecting arms or brackets on the carriage support, locking means for locking said carriage support in elevated position, and suitable stops against which the carriage support contacts when in the elevated position, whereby the typewriter can be collapsed by swinging the carriage support downwardly and rearwardly back of the main frame of the typewriter, and can be swung into operative position above the same and locked by the said locking means, as specified.

14. In a typewriting machine, the combination with a main frame, of a type bar segment in said frame, a carriage support having ways therein, a carriage with platen devices mounted thereon, means of feeding

the said carriage, inking devices associated with the type bars and platen, a pair of supporting arms pivoted to the lower rear portions of said frame and extending upwardly and rearwardly and connected to pivots on the said carriage support, a pair of pivoted arms pivoted to the sides of the frame in front of and above the pivots for the supporting arms, and pivotally connected to forwardly projecting arms or brackets on the carriage support, a locking pull bar with finger pieces in front, pivoted to the upper part of each of the said supporting arms and containing a slot arranged and disposed to engage a pivot pin on the side of the case, the said slot being provided with locking notches at each end, and stops against which the carriage support contacts when in the elevated position, as specified.

15. In a typewriting machine, the combination with a main frame, of a type bar segment in said frame, a carriage support having ways therein, a carriage with platen devices mounted thereon, means of feeding the said carriage, inking devices associated with the type bars and platen, a pair of supporting arms pivoted to the lower rear portions of said frame and extending upwardly and rearwardly and connected to pivots on the said carriage support, a pair of pivoted arms pivoted to the sides of the frame in front of and above the pivots for the supporting arms, and pivotally connected to forwardly projecting arms or brackets on the carriage support, locking means for locking said carriage support in elevated position, and stops against which the carriage support contacts when in the elevated position, as specified.

16. In a typewriting machine, the combination with a frame, of key levers fulcrumed toward their rear ends and having upwardly projecting short arms supported in guiding combs, depending links pivoted to the upper part of said frame, containing slots, pins on the short arms of said levers engaging in said slots for swinging the said links, horizontally disposed slide bars guided in combs, slotted at their forward ends and engaging a common transverse bar, and provided with upwardly projecting engaging lugs, and a shiftable type bar segment disposed above said key action, rearwardly extending horizontal links connecting the said horizontal slide bars to the short arms of the type bars, coöperating for the purpose specified.

17. In a typewriting machine, the combination with a frame, of key levers fulcrumed toward their rear ends and having upwardly projecting short arms supported in guiding combs, depending links pivoted to the upper part of said frame, containing slots, pins on the short arms of said levers engaging in said slots for swinging the said links, horizontally disposed slide bars provided with upwardly projecting engaging lugs, and a shiftable type bar segment disposed above said key action, rearwardly extending horizontal links connecting the said horizontal slide bars to the short arms of the type bars, coöperating for the purpose specified.

18. In a typewriting machine, the combination with a frame, of key levers fulcrumed toward their rear ends and having upwardly projecting short arms supported in guiding combs, depending links pivoted to the upper part of said frame, containing slots, pins on the short arms of said levers engaging in said slots for swinging the said links, horizontally disposed slide bars guided in combs, slotted at their forward ends and engaging a common transverse bar, and provided with upwardly projecting engaging lugs, a universal bar disposed to be acted upon thereby, and a shiftable type bar segment disposed above said key action, rearwardly extending horizontal links connecting the said horizontal slide bars to the short arms of the type bars, cooperating for the purpose specified.

19. In a typewriting machine, the combination with a frame, of key levers fulcrumed toward their rear ends and having upwardly projecting short arms supported in guiding combs, depending links pivoted to the upper part of said frame, containing slots, pins on the short arms of said levers engaging in said slots for swinging the said links, horizontally disposed slide bars guided in combs, slotted at their forward ends and engaging a common transverse bar, and provided with upwardly projecting engaging lugs, a universal bar with connections to the escapement disposed to be acted upon by the said slide bar, and a shiftable type bar segment disposed above said key action, rearwardly extending horizontal links connecting the said horizontal slide bars to the short arms of the type bars, coöperating for the purpose specified.

20. In a key action for typewriting machine, the combination of the key lever provided with an upwardly projecting short arm toward its rear end and fulcrumed toward its rear end, a depending link disposed to be actuated by the said short arm of the key lever, a horizontal slide connected to the lower end of said depending link, and a horizontal link connecting the said slide to the type bar, said horizontal link and slide being disposed in proximity to said key lever, coacting as specified.

21. In a typewriting machine of the class described, the combination of a shiftable type bar segment, a pair of shift levers, one of which is directly connected to elevate the

type bar segment to its highest position, and the second of which is pivoted to the first shift lever to coact therewith and elevate the carriage to an intermediate position, and a stop for limiting the movement of said second lever, coacting as specified.

In witness whereof, I have hereunto set my hand and seal in the presence of two witnesses.

HENRY P. NORDMARK. [L. S.]

Witnesses:

EARL STOKOE,

F. M. BRICK.