Aug. 11, 1964 J. V. BOUYOUCOS 3,143,999

HYDROACOUSTIC OSCILLATOR TECHNIQUES

Filed May 3, 1962

Fig. 3

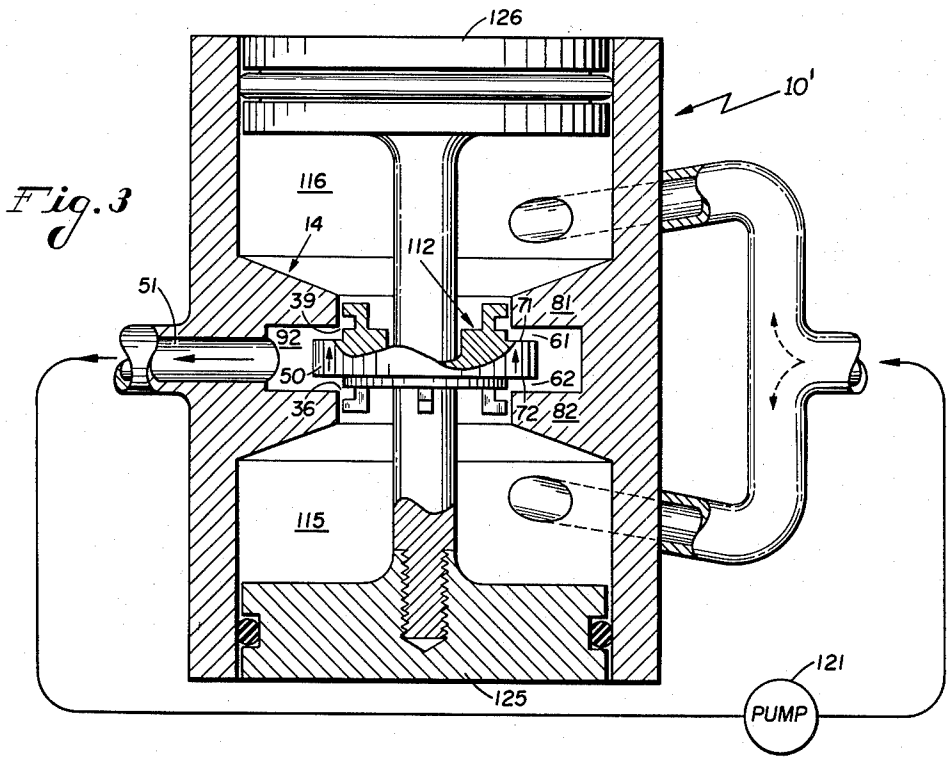


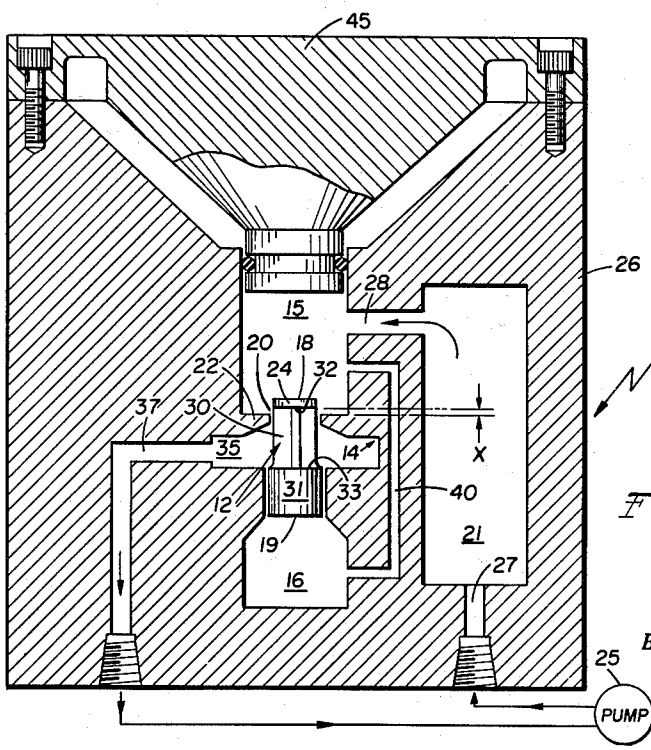


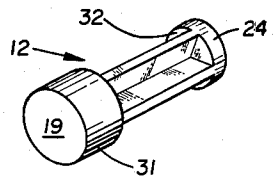


Fig. 2

Fig. 1

INVENTOR.
JOHN V. BOUYOUCOS
BY
ATTORNEY

United States Patent Office 3,143,999 Patented Aug. 11, 1964



3,143,999

# HYDROACOUSTIC OSCILLATOR TECHNIQUES

John V. Bouyoucos, 10 Blossom Circle E., Rochester 10, N.Y.

Filed May 3, 1962, Ser. No. 192,274
5 Claims. (Cl. 116—137)

This invention relates to self-excited hydroacoustic transducers and, more particularly, to means for enhancing the power conversion performance of hydroacoustic oscillators by proper use of forces resulting from fluid momentum transfer effects.

In U.S. Patent 2,792,804 of John V. Bouyoucos and Frederick V. Hunt, there are described several embodiments of acoustic vibration generators of the self-excited oscillator type which convert hydraulic flow energy into acoustic energy when a fluid medium flowing under pressure in a closed path is modulated regeneratively by valving means. The valving means may move back and forth within a stationary port structure which cooperates with the valving means to modulate flow through orifices defined at the opposing ends of the valving means, or through a single orifice, in the case of single-ended switching. In this way, the fluid passing into and from oscillator cavities disposed in the fluid path is alternately accelerated and decelerated, causing pressure variations within the cavities. By proper design, these pressure variations may be made to react upon the valving means in such phase relative to the motion of the valving means as to sustain the valving action. These pressure variations give rise to acoustic energy which may be extracted from at least one of the oscillator cavities.

One of the factors limiting the maximum theoretical efficiency of power conversion of prior hydroacoustic transducers stems from the loss of kinetic energy associated with the jet which is developed on the downstream side of the switching orifice. The kinetic energy of a discharge jet is always finite and is worthwhile recovering as useful energy. As long as this kinetic energy is left to become dissipated in turbulence in the discharge cavity, it is wasted energy. By proper modification of the valving element, it is possible to controllably recover at least a portion of the discharge kinetic energy in order to increase the overall power conversion efficiency of the hydroacoustic oscillator.

In addition to the regenerative pressure forces that can exist upon the valve by virtue of the gross effects of flow modulation, already mentioned, further forces may be applied to the valve as a result of fluid momentum transport effects in the immediate vicinity of the valving region. There is, for example, a static fluid flow force that tends always to close a valve. This steady state force is proportional to the product of the density of the fluid, the rate of flow through the orifice and the component of velocity of fluid flowing through said orifice along the axis of valve motion. There is, furthermore, a dynamic flow force proportional to the rate of change of flow of the fluid through the orifice in a direction which depends upon the direction of flow of the fluid. By means hereafter to be described, it is possible to make use of the forces exerted on said valve immediately downstream of the orifice as a consequence of the dynamic flow through the orifice to enhance or reinforce the motion of the valve accomplished by the effects of flow modulation. The effect of said enhancement may result not only in increased efficiency of power conversion, but also in increased power handling capability.

In addition to providing a regenerative valving arrangement, it may be further desirable to stabilize statically the aforesaid valve. This can be accomplished,



in the case of the single-ended oscillator, by the balancing of the closing force arising from the efflux of momentum through the orifice with an opening force of equal magnitude by designing the opposite end faces of the valve of different diameters. The desired balanced condition may be shown to attain when the difference in diameter of the opposite ends of the valve is substantially equal to the desired orifice spacing when the valve is in the equilibrium or center position. In the push-pull oscillator, the closure forces on opposite sides of the valve are oppositely directed. Thus, the conditions for static balance are achieved without the necessity of resorting to unequal valve end faces.

FIG. 1 is a central cross-sectional view of a hydroacoustic oscillator in accordance with the invention;

FIG. 2 is an enlarged view showing details of the valving means of FIG. 1; and

FIG. 3 is a view illustrating a further embodiment of the invention.

Referring now to FIGS. 1 and 2, a single-ended hydroacoustic oscillator **10** is illustrated which takes advantage of both the static and dynamic flow forces originating in the immediate vicinity of the valving orifice. The oscillator **10** includes a valve **12** axially movable with respect to a stator port assembly **14**. The oscillator further includes a pair of oscillator chambers **15** and **16** communicating with opposite faces **18** and **19** of valve **12**. As will be explained subsequently, the diameter of end face **19** is greater than that of end face **18**. An orifice **20** is provided by the land portion **22** of port assembly **14** and the end portion **24** of valve **12**. An axial spacing $x$ is maintained between the valve and the stator port assembly in the null or equilibrium position of the valve. A fluid under pressure from a hydraulic pump **25** enters the housing **26** through conduit **27** and passes through pressure release cavity **21** and inlet line **28** into chamber **15**. The volume of cavity **21** is considerably larger than that of chamber **15**. The fluid next passes through orifice **20** into the region **30** bounded in part by opposite lands **24** and **31** of valve **12**. The fluid then flows into the discharge region **35** and outlet line **37** back to fluid pump **25**. In order to equalize the static pressures in chambers **15** and **16**, a hydraulic short circuit is provided by means of loop **40** interconnecting the two chambers. Whereas loop **40** enables the static pressure in chambers **15** and **16** to be equal, the acoustic impedance of loop **40** should be sufficiently high at the operating frequency so that negligible acoustic flow exists within the loop.

The oscillator operating frequency is chosen so that it is below the resonant frequency of the acoustic circuit of the valve including the stiffness of chamber **16** and the mass of valve **12**, whereupon the valve is stiffness-controlled and moves in phase with the force applied to surface **18** of the valve. If the valve **12** should be subjected to an incremental oscillation about its equilibrium position, resulting, for example, in an instantaneous displacement of the valve away from acoustic chamber **15**, there will result a reduction of the fluid flow through orifice **20**, accompanied by an increase of pressure in chamber **15**. This increase in pressure causes a force to be exerted against the exposed face **18** of valve **12** in a direction such as to assist in closure of orifice **20**. If, on the other hand, the valve should tend to open, i.e., be displaced toward acoustic chamber **15**, there will be an increase in fluid flow through orifice **20** and a decrease in pressure in chamber **15**. The decrease in pressure causes a force to be exerted upon the face **18** of valve **12** such as to assist in opening orifice **20**.

The regenerative forces above described can result in a self-excited oscillation of the system at a frequency for which the inertance of the inlet line **28** is in parallel reso-

nance with the net acoustic stiffness provided by the parallel combination of the stiffness of the fluid in chamber **15** and the stiffness presented by the face **18** of the valve backed by the fluid in chamber **16**.

The acoustic energy generated within chamber **15** is shown to be coupled to a radiating piston **45** which may be resiliently mounted to the oscillator housing **26**. Other forms of coupling devices may, of course, be employed.

Consider now the forces exerted upon valve **12** owing to the momentum transport effect. As the valve **12** moves toward chamber **15**, the orifice opening increases and the flow of fluid therethrough accelerates. A dynamic pressure differential is thereby created within region **30** wherein the pressure is higher in the vicinity of orifice **20** than in the vicinity of the exit region **35**. The pressure of the fluid within region **35** at a point remote from orifice **20** remains substantially at the return pressure of the fluid system. In other words, there is a resulting force exerted on the surfaces **32** and **33** of valve **12** which is in the same direction as the motion of the valve. As the valve **12** moves toward chamber **16**, the orifice **20** begins to close, the flow of fluid decelerates and a pressure differential is created in region **35** such that the pressure is higher in the vicinity of exit **35** than in the vicinity of orifice **20**. A net dynamic force then is exerted on valve surfaces **32** and **33** which again aids the movement of the valve. The dynamic force exerted on the valve can be shown to be in phase with the valve velocity. As a result, a negative resistance appears in the valve circuit which helps to accentuate the regenerative behavior of the valve, thereby aiding the power conversion process.

In addition to providing negative damping, essential for a regenerative valving arrangement, it is also desirable to stabilize the valve statically. This may be achieved by making the diameter of face **19** of the valve **12** larger than the diameter of face **18** to create a static opening force of such magnitude as to balance the closing force arising from the efflux of momentum through the orifice **20**. The static axial flow on valve **12** equals the axial component of the net rate of efflux of momentum through the boundary of region **35**. In practice, the area of orifice **20** is considerably smaller than the exit area at the boundaries of regions **35** and **37**. Since the velocities are inversely proportional to the areas, the efflux of momentum from region **35** into region **37** is negligible compared to the influx of momentum at orifice **20**. The closing force $F_c$ is given by $F_c=\rho Qv$, where $\rho$ is the density of the fluid, Q is the rate of flow of fluid through the orifice **20**, and $v$ is the axial component of velocity of the flow of fluid passing through the orifice. The velocity $v$ may be given by

$$v=C_u\sqrt{\frac{2\Delta P}{\rho}}\cos\theta \tag{1}$$

where $C_u$ is the velocity coefficient, $\theta$ is the angle which the axis of the stream makes with the valve axis and $\Delta P$ is the difference between the upstream and downstream pressure. The rate of flow Q is given by

$$Q=C_gWx\sqrt{\frac{2\Delta P}{\rho}} \tag{2}$$

where $C_g$ is the discharge coefficient, W is the peripheral length of the orifice, which, in the case of orifice **20**, is equal to $2\pi r_1$, where $r_1$ is the radius of the end face **18** of valve **12**, and $x$ is the axial displacement or opening of the valve with respect to the stator port metering edge. Rewriting the equation for $F_c$,

$$F_c=\rho\left(C_gWx\sqrt{\frac{2\Delta P}{\rho}}\right)\left(C_u\sqrt{\frac{2\Delta P}{\rho}}\cos\theta\right)=2C_gC_ux\Delta P\cos\theta \tag{3}$$

It is evident that the closing force is proportional to the product of the displacement $x$ and the pressure differential **ΔP.**



The closing force $F_c$ creates a stiffness force in phase with the position in the valve and always tends to close the valve orifice, regardless of the direction of fluid flow therethrough.

The axial force exerted on the piston which tends to cause the valve to open will now be considered. The fluid loop **40** constituting a static hydraulic short circuit places both chambers **15** and **16** at the same internal pressure. Since the area of valve face **19** is greater than that of valve face **18**, there will be a net opening force to the right. This opening force may be given by

$$F_0=A_2\Delta P-A_1\Delta P \tag{4}$$

where $A_2$ and $A_1$ represent the area of faces **19** and **18**, respectively, of valve **12**.

For equilibrium, the closing force $F_c$ and the opening force $F_0$ are equal; that is,

$$2C_gWx\cos\theta=A_2-A_1 \tag{5}$$

It will be noted that this equation is not dependent upon the quantity $\Delta P$. For practical values of operation and using metering orifice of rectangular configuration, $C_gC_u\simeq 0.5$ and $\cos\theta\simeq 0.5$.

If $r_2$ and $r_1$ are the radii of respective end faces **19** and **18** of valve **12**, Equation 5 can be written

$$\pi r_1x=\pi(r_2^2-r_1^2) \tag{6}$$

or

$$x=\frac{r_2^2-r_1^2}{r_1} \tag{7}$$

The difference between the two radii $r_2$ and $r_1$ may be represented by $\Delta r$ and is small compared to either $r_2$ or $r_1$. In other words,

$$r_2=r_1+\Delta r \tag{8}$$

Rewriting Equation 7 and solving for $x$,

$$x\simeq\frac{2\Delta rr_1}{r_1}\simeq 2\Delta r \tag{9}$$

Thus, the difference in diameter of the two opposite faces **18** and **19** of the valve **12** is substantially equal to the desired orifice spacing. By using unequal areas on the valve faces, it is possible to obtain a condition of force balance and an equilibrium orifice spacing independent of pressure.

In the double-ended design wherein fluid flows through orifices at both ends of the valve, the closing forces on opposite faces of the valve are oppositely directed and tend to cancel one another, thereby tending to stabilize the null position automatically. In such a case, a difference in area of opposing valve faces would, of course, be undesirable.

Referring to FIG. 3, a hydroacoustic oscillator **10'** is shown which embodies a push-pull valving configuration. In this oscillator, fluid flows into each of the oscillator chambers **115** and **116** and out through orifices **36** and **39** to a discharge chamber **92** and outlet **51** to the return side of a fluid pump **121**. The valve **112** includes an annular projecting section **50** extending radially from the body of valve **112** which is intended to intercept a portion of the energy of the orifice discharge in such a phase relation as to enhance the valve motion, thereby to aid the power conversion process. This projecting section provides channels **61** and **62** between the faces **71** and **72** of the projecting section **50** of the moving valve and the juxtaposed surfaces of the portion **81** and **82** of stator assembly **14**, all respectively.

The basic operation of the oscillator is such that, if the massive valve **112** of FIG. 3 should be subjected to an incremental oscillation about its equilibrium position, resulting at some instant, for example, in an incremental displacement of the valve towards chamber **116**, a decrease of fluid discharge from chamber **116** will occur, accompanied by an increase in pressure within this chamber; on the other hand, an increase of fluid discharge will

occur from chamber **115**, accompanied by reduction of pressure therein. The relatively higher instantaneous pressure in chamber **116**, coupled with the relatively lower instantaneous pressure chamber **115**, provides a net force increment on massive valve **112** which is directed opposite to the above assumed incremental displacement of the valve, or in phase with its acceleration.

An incremental oscillating acceleration of massive valve **112** thus will be accompanied by push-pull pressure changes within chambers **115** and **116** which react upon valve **112** to accentuate the given acceleration. This illustrates the regenerative nature of the valving action. If the losses in the acoustic circuit of the generator are not too high, this regenerative feature will permit oscillations to build up and to be sustained at a frequency for which the acoustic reactance, seen looking into chambers **115** and **116** from the orifices **36** and **39**, is equal but of opposite sign to the acoustic reactance presented by the valve. The acoustic energy generated within chambers **115** and **116** may be coupled by means of respective piston-type radiators **125** and **126** to external load means.

The extraction of energy from the discharge jet to aid the valve oscillator will now be analyzed. As the valve **112** moves toward chamber **116**, the area of annular orifice **39** decreases and the fluid flow therethrough is decelerated. Simultaneously, the massive fluid column flowing radially from the downstream side of orifice **39** through channel **61** to the discharge chamber **92** is decelerated. This deceleration of flow in channel **61** is accompanied by a reduction of pressure in channel **61** with respect to the pressure in the discharge chamber **92**.

At the same time that the area of annular orifice **39** is decreasing, owing to motion of valve **112** toward chamber **116**, annular orifice **36** is increasing, and the fluid flow therethrough is accelerated, resulting in an acceleration of the massive fluid column bowing radially from the downstream side of orifice **36** through channel **62** to the discharge chamber **92**. This acceleration of flow in channel **62** is accompanied by an increase in pressure in channel **62** with respect to the pressure in discharge chamber **92**.

Thus, accompanying a motion of the valve toward chamber **116**, there will be an increase in pressure in channel **62** and a decrease in pressure in channel **61**, with respect to discharge chamber **92**, resulting in a net force on the projecting faces **71** and **72** of annular projecting section **50** of the valve **112** directed toward chamber **116**. It is evident that a motion of valve **112** toward chamber **115**, on the other hand, will result in a net force on the projecting faces **71** and **72** of annular projecting section **50** of the valve directed toward chamber **115**.

It is to be noted that the fluid volume velocity through orifices **36** and **39** will be approximately in phase with valve displacement, if positive valve displacement is taken in the direction of orifice opening. Since, however, the pressure variations in channels **61** and **62** are in phase with the acceleration of the channel flow, the pressure variations must be in phase with the valve velocity. But this is to say that the pressure variations arising from the acceleration and deceleration of the fluid contained in the discharge jet within the channels **61** and **62** do push-pull work upon the valve to aid its motion. Looked at from another point of view, the valve sees a negative resistance arising from energy extracted from the discharge stream.

In addition to a negative resistance, the valve can see an additional mass loading due to the fluid that is squeezed out of the channels **61** and **62** as the faces **71** and **72** of the projecting section **50** move relative to the juxtaposed surfaces of the portions **81** and **82** of the stator assembly **14**.

In summary, then, the presence of projecting section **50** on the valve **112** can provide a negative resistance to valve motion arising from the acceleration and deceleration of the discharge jet as controlled by the instantaneous orifice spacings. In addition, the squeezing of fluid in and out of channels **61** and **62** due to valve motion relative to the stator assembly provides additional mass loading upon the valve.

The negative resistance observed can aid the power conversion process since, in effect, energy contained within the discharge jet is now being recovered as useful work, and is not being wholly dissipated in turbulence in the discharge channel. The effect of the additional mass loading upon the valve will act to lower slightly the oscillation frequency from that to be observed in the absence of projecting section **50**.

What is claimed is:

1. In an acoustic vibration generator comprising a port structure partially bounding a pair of chambers containing a fluid under pressure, said port structure further containing a discharge chamber connected externally to the low pressure side of a fluid source, a fluid control valve movable in response to pressure variations within said chambers to provide variable orifice means for modulating the flow of fluid through said chambers and to produce pressure variations therein, said valve being driven relative to said port structure in consequence of said pressure variations to sustain the flow modulation, said valve having means projecting therefrom for at least partinually defining a discharge region intermediate said discharge chamber and said orifice means for conveying fluid passing through said orifice means into said discharge chamber, the movement of fluid within said discharge region providing a pressure gradient within said discharge region producing a net force upon said projecting means aiding the movement of said valve.

2. In an acoustic vibration generator comprising a port structure partially bounding a pair of chambers containing a fluid under pressure, said port structure further containing a discharge chamber connected externally to the low pressure side of a fluid source, a fluid control valve movable in response to pressure variations within said chambers to provide variable orifice means for modulating the flow of fluid through said chambers and to produce pressure variations therein, said valve being driven relative to said port structure in consequence of said pressure variations to sustain the flow modulation, said valve having means projecting therefrom into said discharge chamber for at least partially defining a discharge region intermediate said discharge chamber and said orifice means for conveying fluid passing through said orifice means into said discharge chamber, the movement of fluid within said discharge region providing a pressure gradient within said discharge region producing a net force upon said projecting means aiding the movement of said valve.

3. In an acoustic vibration generator comprising a port structure partially bounding a pair of chambers containing a fluid under pressure, said port structure further containing a discharge chamber connected to the low pressure side of a fluid source, a fluid control valve movable in response to pressure variations within said chambers to provide variable orifice means for modulating the flow of fluid through said chambers and to produce pressure variations therein, said valve being driven relative to said port structure in consequence of said pressure variations to sustain the flow modulation, said valve including two oppositely disposed end portions at least partially defining a discharge region intermediate said discharge chamber and said orifice means for conveying fluid passing through said orifice means into said discharge chamber, the movement of fluid within said discharge region providing a pressure gradient within said discharge region producing a net force upon said end portions aiding the movement of said valve.

4. In an acoustic vibration generator comprising a port structure partially bounding a pair of chambers containing a fluid under pressure, said port structure further containing a discharge chamber connected to the low pressure side of a fluid source, a fluid control valve movable

in response to pressure variations within said chambers to provide variable orifice means for modulating the flow of fluid through said chambers and to produce pressure variations therein, said orifice means having a predetermined longitudinal opening when said valve is in the equilibrium position, said valve being driven relative to said port structure in consequence of said pressure variations to sustain the flow modulation, said valve including two oppositely disposed end portions having diameters which differ by the amount of opening of said orifice means, said valve end portions at least partially defining a discharge region intermediate said discharge chamber and said orifice means for conveying fluid passing through said orifice means into said discharge chamber, the movement of fluid within said discharge region providing a pressure gradient within said discharge region producing a net force upon said end portions aiding the movement of said valve.

5. In an acoustic vibration generator comprising a port structure partially bounding a pair of chambers containing a fluid under pressure, said port structure further containing a discharge chamber connected externally to the low



pressure side of a fluid source, a fluid control valve movable in response to pressure vibrations within said chambers to provide variable orifice means for modulating the flow of fluid through said chambers and to produce pressure variations therein, said valve being driven relative to said port structure in consequence of said pressure variations to sustain the flow modulation, said valve including a radially projecting portion forming with said port structure a pair of narrow fluid channels for discharging said fluid passing through said orifice means in said discharge chamber.

**References Cited** in the file of this patent

UNITED STATES PATENTS

| | | |
|---|---|---|
| 1,618,982 | Hahnemann et al. | Mar. 1, 1927 |
| 2,164,858 | West | July 4, 1939 |
| 2,693,944 | Fowle | Nov. 9, 1954 |
| 2,792,804 | Bouyoucos et al. | May 21, 1957 |
| 2,859,726 | Bouyoucos et al. | Nov. 11, 1958 |
| 3,004,512 | Bouyoucos et al. | Oct. 17, 1961 |