Nov. 1, 1966

J. F. STANLEY ETAL

3,281,873

MANUALLY OPERABLE HOSPITAL BED WITH SELECTIVELY POSITIONABLE CONTROL

Filed Aug. 31, 1965

3 Sheets-Sheet 1

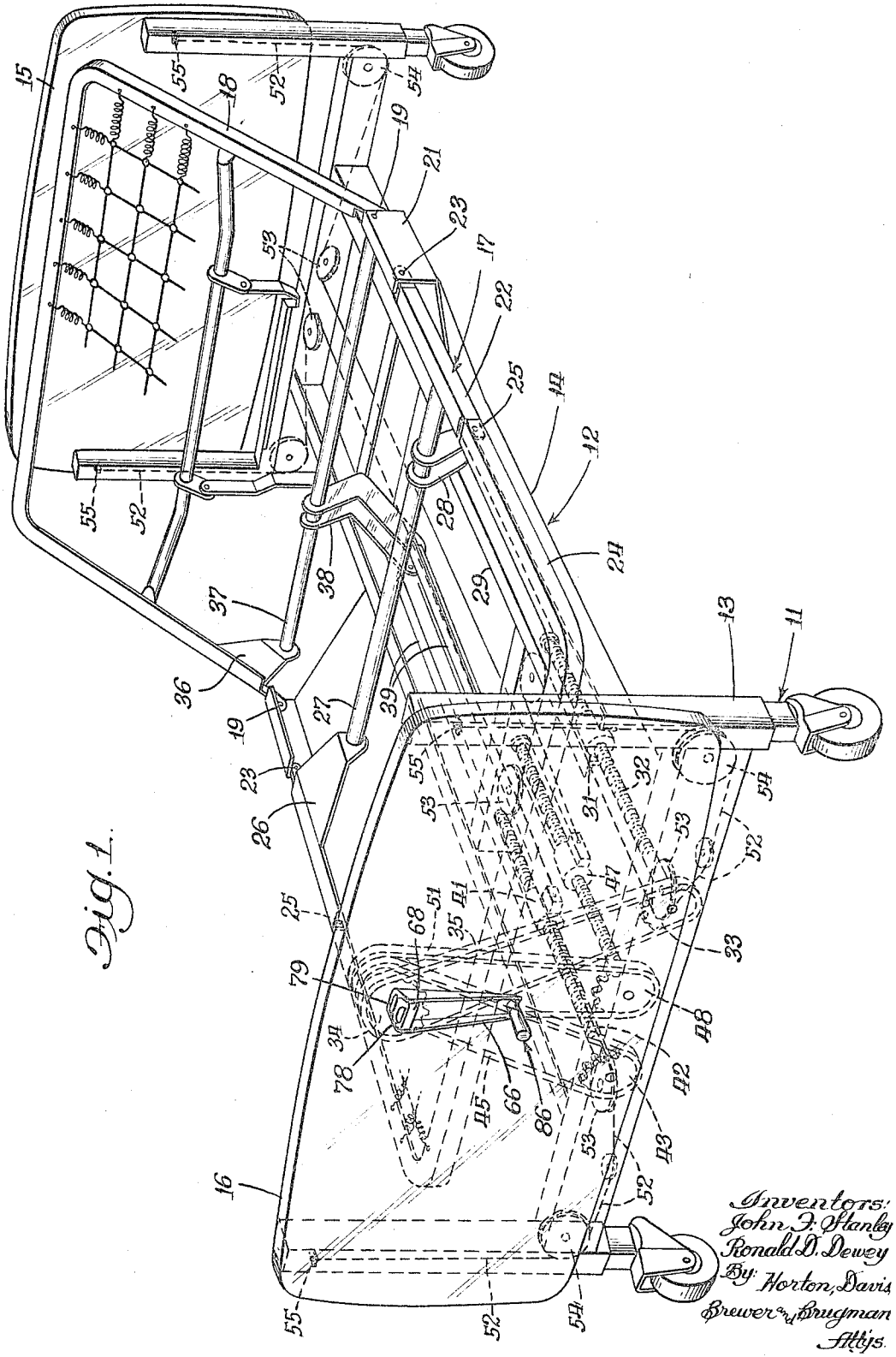

Fig. 1.

Inventors:
John F. Stanley
Ronald D. Dewey
By: Norton, Davis
Brewer & Brugman
Attys.

Nov. 1, 1966

J. F. STANLEY ETAL

3,281,873

MANUALLY OPERABLE HOSPITAL BED WITH SELECTIVELY POSITIONABLE CONTROL

Filed Aug. 31, 1965

3 Sheets-Sheet 2

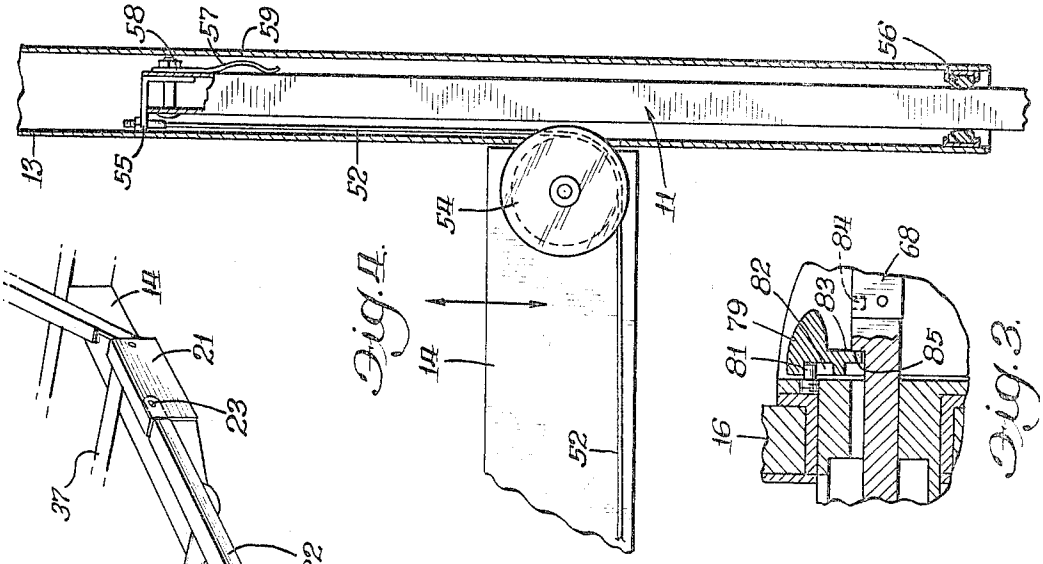

Fig. 4.

Fig. 3.

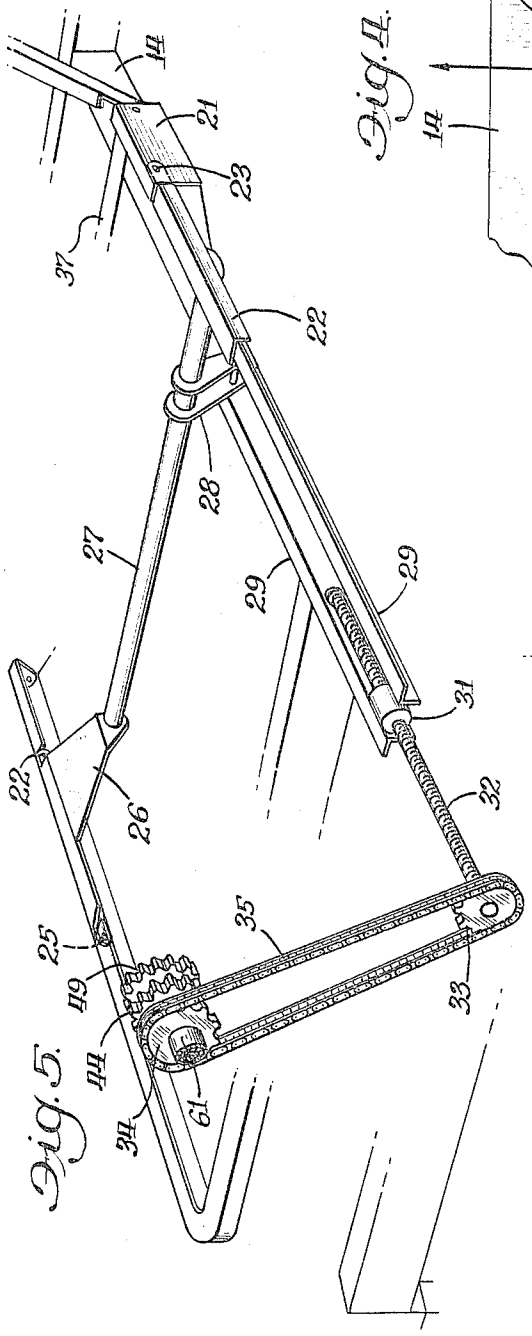

Fig. 5.

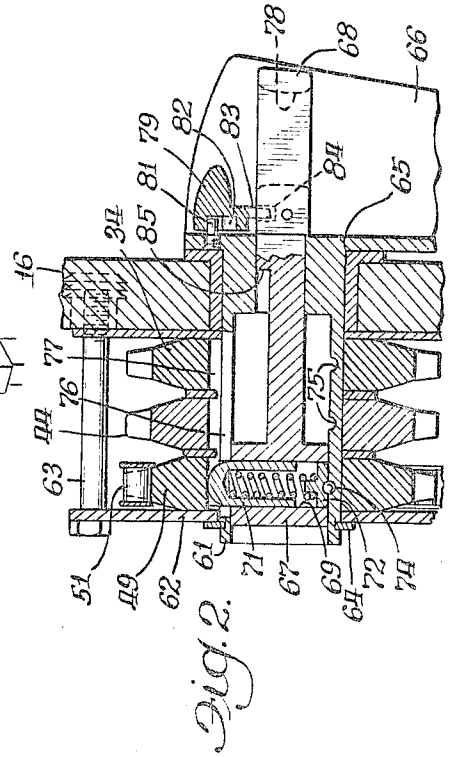

Fig. 2.

Inventors:
John F. Stanley
Ronald D. Dewey
By: Norton, Davis, Brewer and Brugman
Attys

Nov. 1, 1966

J. F. STANLEY ETAL

3,281,873

MANUALLY OPERABLE HOSPITAL BED WITH SELECTIVELY POSITIONABLE CONTROL

Filed Aug. 31, 1965

3 Sheets-Sheet 3

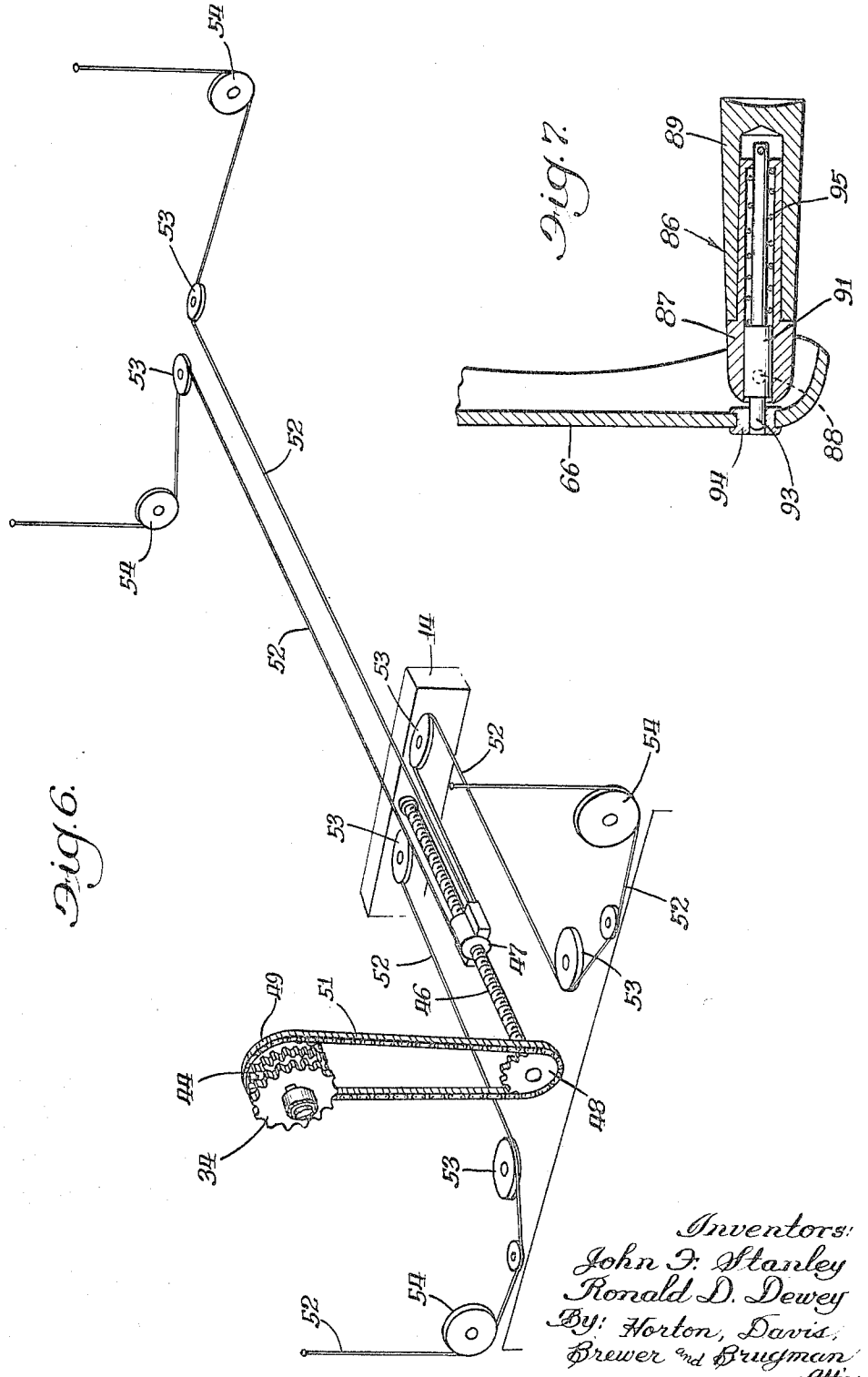

Fig. 6.

Fig. 7.

Inventors:
John F. Stanley
Ronald D. Dewey
By: Horton, Davis, Brewer and Brugman
Attys.

United States Patent Office

3,281,873

Patented Nov. 1, 1966

3,281,873

MANUALLY OPERABLE HOSPITAL BED WITH SELECTIVELY POSITIONABLE CONTROL

John F. Stanley, Whiting, and Ronald D. Dewey, Plover, Wis., assignors to Joerns Furniture Company, Stevens Point, Wis., a corporation of Wisconsin

Filed Aug. 31, 1965, Ser. No. 484,010

5 Claims. (Cl. 5—68)

This invention relates in general to hospital beds and, more specifically, to manually operable beds with a hi-low or vertically adjustable frame supporting an articulated spring having head and knee or foot sections independently adjustable or swingable between raised and lowered positions relative to the frame.

Such beds customarily employ three manually operable cranks located, respectively, at the center and adjacent the lower corner portions of the footboard, each of which may be rotated to effect one of the indicated adjustments. The nurse, orderly or other operator thus is required to assume and move between awkward and uncomfortable positions in effecting desired adjustments by means of the three cranks.

A principal object of this invention, therefore, is to avoid the usual difficulties encountered in operating such mechanism and enable an operator to selectively effect any one of a plurality of hospital bed adjustments by means of a single manually operable crank conveniently located for maximum ease of operation.

This object is accomplished in the illustrated embodiment of the invention by providing a crank at approximately waist height at the footboard of the bed for rotating a shaft extending horizontally through the footboard and having a plurality of selectively operable sprockets rotatably mounted thereon for respectively effecting the different adjustments, such as hi-low, and movements of the head and knee sections of the spring, with a control member selectively movable longitudinally of the shaft to drivingly interconnect any one of the sprockets with the crank.

Another important object of the invention is to enable a doctor's prescription or prohibition against certain otherwise available adjustments to be carried out effectively by locking out or rendering inoperative the mechanism for making the proscribed adjustments.

In the illustrated embodiment, this object of the invention is attained by means of a normally inoperative lock-out knob which may be moved into engagement with the selectively movable control member to prevent movement of the latter from one adjusted position or to prevent movement of the control member into one of its selectively adjustable positions. Thus, for example, the control member may be locked in its hi-low position to prevent swinging adjustments of the spring sections, or it may be locked against movement into the hi-low position to prevent vertical movement of the bed frame from a selected position.

Numerous other objects and advantages of the invention will be apparent as it is better understood from the following description, which, when taken in connection with the accompanying drawings, discloses a preferred embodiment thereof.

In the drawings:

FIGURE 1 is a skeletonized perspective view of a hospital bed embodying the features of the instant invention;

FIG. 2 is a vertical detail section taken through the crank and selective control mechanism;

FIG. 3 is a sectional view similar to FIG. 2 showing the selectively operable control member disposed in a different position;

FIG. 4 is a detail vertical section through one of the telescoping leg mechanisms;

FIG. 5 is a skeleton view similar to FIG. 1 with parts broken away to show the actuating mechanism for adjusting the knee action of the spring;

FIG. 6 is a view similar to FIGS. 1 and 5 illustrating the hi-low actuating mechanism; and

FIG. 7 is a vertical detail section through the foldable handle of the operating crank.

Referring more particularly to FIG. 1, a hospital or invalid's bed is disclosed therein which comprises four supporting legs, indicated generally by reference numeral **11**, and a vertically movable frame, generally designated by reference numeral **12**, which is made up of four outer legs **13** telescopically mounted on the legs **11** and interconnected by means of the usual rail-type frame structure **14**. Also secured in any suitable manner to this frame structure **14** are a headboard **15** and a footboard **16**.

Mounted upon and supported by the frame structure **14** in well known manner is an articulated bed spring, designated generally by reference numeral **17**, which comprises a head section **18** pivotally connected as at **19** to an intermediate section **21** secured to the frame structure; a knee section **22** pivotally connected to the intermediate section **21** at **23**; and a foot section **24** pivotally connected at its inner end at **25** to the knee section **22** and slidably supported at its outer end in the usual manner on the frame structure **14**.

Means are provided for actuating the knee and foot sections by raising and lowering their interconnecting pivots **25** which comprises a pair of brackets **26** (FIGS. 1 and 5) secured to the side rail members of the knee section **22** at their upper ends and to the ends of a transverse shaft **27** at their lower ends. Also secured to this shaft **27** and depending therefrom are a pair of lever arms **28**, the lower ends of which are pivotally connected to the rear ends of a pair of parallel rails **29** extending forwardly therefrom and secured at their forward ends to a nut **31**. The latter engages a horizontal screw **32** which is rotatably supported at its rear end in any suitable manner by the frame structure **14** and at its forward end is provided with a sprocket wheel **33**. This sprocket wheel **33** is adapted to be rotated by an upper sprocket wheel **34** through the agency of an interconnecting chain **35** to move the nut **31** translationally on the screw **32**. The resulting translational movements of the rails **29**, through the agency of the levers **28**, shaft **27** and brackets **26**, will raise and lower the knee section **22** of the spring about its pivots **23**. This also will cause the foot section **24** of the spring to be correspondingly moved through the agency of the pivots **25**, with the outer end of that section **24** sliding on the frame structure **14**. It will be appreciated, of course, that similar mechanism may be employed to move the foot section **24** up and down on its pivots **25** independently relative to the knee section **22**.

Referring again to FIG. 1, similar means are provided for swinging the head section **18** of the bed spring up and down on its pivots **19** which comprises a pair of brackets **36** depending from and secured to the side rails of the head section **18** and attached at their lower ends to a transverse shaft **37**. A pair of levers or crank arms **38** are secured at their upper ends to the shaft **37** and pivotally connected at their lower ends to a pair of parallel rails **39** which are secured at their forward ends to a nut **41** mounted on a screw **42**. A sprocket wheel **43** is mounted on the forward end of the screw **42** for rotating the latter which, like the screw **32**, is rotatably mounted at its rear end in any suitable manner in the frame structure **14**. The sprocket **43** is adapted to be driven by an upper sprocket wheel **44** by means of a chain **45**. As will be readily appreciated, rotation of the screw **42** will effect translational movements of the nut **41** that will be transmitted into swinging adjustments of the head section **18** of the bed spring through the agency

of the rails **39**, crank arms **38**, shaft **37** and brackets **36**.

Hi-low adjustments of the frame **12** and the bed spring **17** are effected by an actuating means, generally similar to the spring section actuating means previously described, which comprises a screw **46** rotatably supported at its inner end by the frame structure **14** in any suitable manner and engaging with a nut **47** which is constrained against rotation and is slidably guided by the frame structure **14** by any well known arrangement. A sprocket wheel **48** is secured to the forward end of the screw **46** and is rotatable by an upper sprocket wheel **49** through the agency of a chain **51**. Secured at their forward ends in any suitable manner to the nut **47** are two pairs of front and rear cables **52** for effecting vertical adjustments or movements of the frame **12** relative to its supporting legs **11**. Each of the cables **52** passes around suitable horizontally disposed guide sheaves **53** and a vertically disposed sheave **54**, as best seen in FIG. 6, the sheaves being rotatably mounted in any suitable manner on the frame structure **14**.

FIG. 4 illustrates the manner in which the outer or upper end of each of these cables **52**, after passing around its associated guide sheave **54**, is secured at **55** to the upper end of one of the inner or supporting legs **11**. FIG. 4 also illustrates the telescopic arrangement of each pair of legs **11, 13**, with suitable bearing or guide means **56** interposed therebetween, and a leaf spring **57** secured at its upper end at **58** to the supporting leg **11** and having a wear button **59** of nylon, or the like, mounted thereon for frictional engagement with an inner surface of the associated leg **13**. With this arrangement, rotations of the screw **46** will simultaneously draw the lower ends of cables **52** forwardly to raise the frame **12** relative to the inner supporting legs **11**, or will permit rearward movement of the lower ends of the cables **52** to effect lowering of the frame **12** by gravity.

Referring now to FIG. 2, the three upper sprocket wheels **34, 44** and **49** are rotatably mounted in side-by-side relationship on a hollow stub shaft **61** which is rotatably supported in any suitable manner at its forward end by, and extends through, the footboard **16** adjacent the top of the latter. The inner end of this shaft **61** may be rotatably supported by a plate **62** secured by bolts **63** to the inner side of the footboard **16**, and the shaft is held against forward movement relative to the plate **62** by any suitable means, such as a split lock ring **64** mounted in a suitable groove in the outer surface of the shaft adjacent its inner end. Secured in the outer end of this hollow shaft **61** in any suitable manner is a hub portion **65** of a crank **66**.

A control member **67** is slidably disposed within the hollow shaft **61**, with the forward end thereof extending through a suitable horizontally disposed aperture in the hub portion **65** of crank **66** and having a manually engageable handle **68** forming a part thereof and secured thereto in any desired manner. The inner portion of the control member **67** is provided with a transverse aperture **69** for slidably receiving a key **71** and a guide member **72** having a coil spring **73** interposed therebetween. The guide member **72** is provided with a spring-pressed ball **74** adapted to be engaged in any one of three depressions or dimples **75** provided in the inner surface of the hollow shaft **61** spaced from each other longitudinally of the shaft and aligned, respectively, with the sprockets **34, 44** and **49**.

The hollow shaft **61** also is provided with a longitudinally extending slot **76** for slidably accommodating the key **71**. Each of the upper sprocket wheels **34, 44** and **49** is provided with keyways or slots **77** to receive the outer end of the key **71**. These upper sprocket wheels, **34, 44** and **49**, thus are selectively rotatable by the crank **66** by virtue of the latter being drivingly interconnected therewith by means of the key **71** and keyways **76, 77**.

The desired selection as to which of the several actuating means is to be operated by the crank **66** is effected by movement of the control member **67** longitudinally of the shaft **61**. To facilitate such selectively operable movements of the control member **67**, its handle **68** may be provided with a finger-receiving aperture **78**, as best seen in FIG. 1.

Under certain circumstances of use, a doctor may proscribe one or more of the available bed adjustments. Consequently, means are provided for selectively rendering inoperative various ones of the bed adjusting actuating means. In the embodiment herein illustrated, this means comprises a normally inoperative lock-out knob **79** vertically slidable in a suitable recess in the upper portion of the crank **66**, the permitted vertical movement of which is limited by a pin **81** mounted in the crank handle and slidably engaging in a vertical groove **82** in this knob. In its upper position, the upper surface of the lock-out knob **79** is substantially flush with the upper end of the crank handle, and the lower end of the knob is provided with a depending flange **83** adapted to engage in a slot **84** in the upper surface of the handle **68** of control member **67** as shown in FIG. 2, or behind a shoulder **85** provided on the control member **67** as illustrated in FIG. 3.

It will thus be appreciated that with the lock-out knob **79** in its operative position of FIG. 2, the control member **67** may not be moved and rotation of the crank **66** can rotate only the innermost sprocket wheel **49** to effect hi-low adjustments of the bed. And if the lock-out knob **79** is raised to its normal inoperative position, the handle **68** of the control member **67** pulled outwardly to align the key **71** with the middle sprocket wheel **44**, and the lock-out knob **79** then depressed behind the shoulder **85**, as shown in FIG. 3, hi-low adjustments of the bed may not be made, although selective adjustments of the spring sections may be effected. The shoulder **85** and slot **84** thus comprise shoulders spaced from each other in the direction of selective movements of the control member **67** for cooperation with the lock-out knob **79** to selectively render inoperative various ones of the sprocket wheels **34, 44, 49**.

In making any selected bed adjustments, the crank **66** normally is stopped in its lowermost position. The keyways **77** and the several sprockets **34, 44** and **49** thus normally will be aligned with each other longitudinally of the shaft **61**. However, such keyway alignment is not essential to selective repositioning of the key **71** by longitudinally moving the control member **67**, since the outer end of the key **71** is somewhat rounded so the key may be cammed inwardly against the action of the spring **73** even if a keyway **77** in the sprocket wheel with which the key is desired to be aligned is not disposed in alignment with the key. The spring-urged ball **74** cooperates with the apertures **75** to indicate to the operator when the key **71** is properly aligned with the selected sprocket wheel. Subsequent rotation of the crank **66** then will permit the spring **73** to engage the key with a keyway **77** of that sprocket wheel as it is thereby brought into alignment with that keyway.

As best seen in FIG. 1, the single operating crank **66** is conveniently disposed at approximately waist height to provide for maximum ease of operation. In addition to its main or depending portion, the crank **66** is provided with a retractable handle **86** which is best illustrated in FIG. 7. This handle **86** comprises an inner tubular portion **87** pivotally connected by means of laterally extending pins **88** to the outer end portion of the crank and having its outer end reduced in diameter to slidably receive a sleeve **89**, the outer surface of which forms a continuation of the outer surface of the inner portion **87**. Slidably mounted in the bore of the tubular portion **87** is a plunger **91** which is connected at its outer end at **92** in any suitable manner to the sleeve **89** and is provided at its inner end with a pin **93** normally engageable in an apertured grommet **94** mounted in the main portion of the crank **66**. A coil spring **95** disposed within the tubular portion **87** urges

the pin 93 rearwardly into such engagement with the grommet 94. When it is desired to fold the handle 86 into the hollowed or formed portion of the main part of the crank 66, it is necessary only to pull the sleeve 89 forwardly against the action of the spring 95 to unseat the pin 93 from the grommet 94 and swing the outer end of the handle 86 upwardly.

It is thought that the invention and many of its attendant advantages will be understood from the foregoing description, and it will be apparent that various changes may be made in the form, construction, and arrangement of the parts without departing from the spirit and scope of the invention or sacrificing all of its material advantages, the form hereinbefore described and shown in the drawings being merely a preferred embodiment thereof.

We claim:

1. A manually operable hospital bed, comprising supporting legs, a frame movable vertically relative to said legs and supported thereby, a first actuating means for vertically adjusting said frame relative to said legs, an articulated spring supported by said frame and having separate sections adjustably movable relative thereto, a plurality of additional actuating means each operable to adjustably move one of said sections, a single crank conveniently mounted on said frame for manual rotation, a control member selectively movable to operatively interconnect said crank with any one of said actuating means, whereby rotation of said crank may effect selective adjustments of said frame and said spring sections, said crank including a hub portion, and said control member extending through said hub portion and terminating adjacent thereto in a manually engageable handle.

2. A hospital bed, comprising supporting legs, a frame movable vertically relative to said legs and supported thereby, a first actuating means for vertically adjusting said frame relative to said legs, an articulated spring supported by said frame and having separate sections adjustably movable relative thereto, a plurality of additional actuating means each operable to adjustably move one of said sections, a single crank conveniently mounted on said frame for manual rotation, a control member selectively movable to different adjustable positions to operatively interconnect said crank with the different ones of said actuating means, whereby rotation of said crank may effect selective adjustments of said frame and said spring sections, normally inoperative lock-out means selectively movable into engagement with said control member to prevent movement thereof from or into one of its selectively adjustable positions, said crank including a hub portion, said control member extending through said hub portion and terminating adjacent thereto in a manually engageable handle having a slot therein, and said lock-out means comprising a knob slidably mounted on said hub portion and provided with a flange engageable with said slot.

3. A hospital bed according to claim 2, wherein said handle has a plurality of vertically extending shoulders spaced from each other in the direction of selective movement thereof, and said lock-out means comprises a knob slidably mounted on said hub portion for selective engagement with any one of said shoulders.

4. In a manually operable hospital bed having supporting legs, a frame mounted on said legs for vertical movement relative thereto and including a vertically disposed footboard, hi-low actuating means for adjusting said frame vertically relative to said legs and including a first sprocket wheel, an articulated spring supported by said frame and having separate head and knee sections adjustably movable relative thereto, separate actuating means for adjusting each of said sections and including, respectively, second and third sprocket wheels, a shaft extending horizontally through and rotatably supported by said footboard and rotatably supporting said sprocket wheels inwardly thereof, a manually rotatable crank secured to the outer end of said shaft, and a control member associated with said shaft and having a manually engageable handle portion at its forward end and key means disposed adjacent its inner end selectively movable to operatively interconnect said shaft with any one of said sprocket wheels.

5. In a hospital bed according to claim 4, normally inoperative lock-out means selectively movable into engagement with said control member to prevent movement of said key means from or into operative connection with one of said sprocket wheels.

References Cited by the Examiner

UNITED STATES PATENTS

2,713,405	7/1955	Mathews	192—48
2,807,808	10/1957	Wetzler	5—63
2,843,240	7/1958	Kruse	5—68 X
2,913,300	11/1959	Darnell et al.	5—68
3,012,253	12/1961	Reichert	5—68

FRANK B. SHERRY, *Primary Examiner.*

CASMIR A. NUNBERG, *Examiner.*