June 10, 1924. 1,497,326

G. H. C. VAN KEULEN

PUMP

Filed Oct. 25, 1921

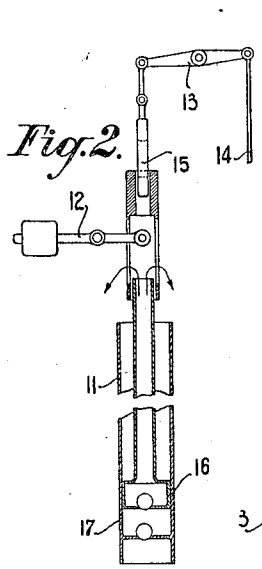

Fig. 2.

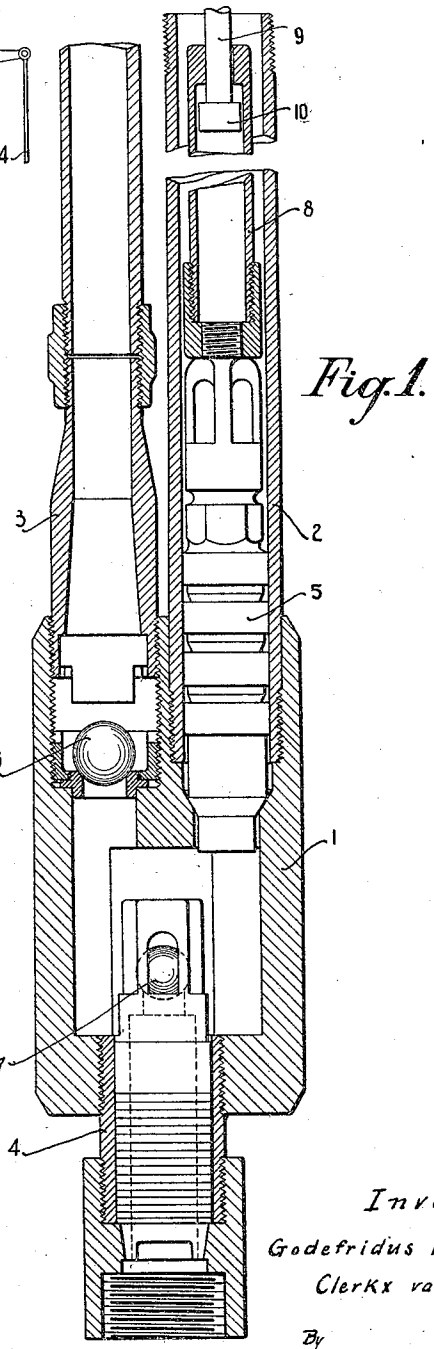

Fig. 1.

Inventor:
Godefridus Hendrikus
Clerkx van Keulen

By Laurence Langner
Attorney

Patented June 10, 1924. 1,497,326

UNITED STATES PATENT OFFICE.

GODEFRIDUS HENDRIKUS CLERKX VAN KEULEN, OF THE HAGUE, NETHERLANDS.

PUMP.

Application filed October 25, 1921. Serial No. 510,341.

To all whom it may concern:

Be it known that I, GODEFRIDUS HENDRIKUS CLERKX VAN KEULEN, a subject of the Queen of the Netherlands, residing at The Hague, Netherlands, have invented certain new and useful Improvements in Pumps, of which the following is a specification.

When raising impure or corrosive liquids, for instance, gritty mineral oils, by means of a pump the inconvenience is experienced that the packing material of the pump piston or plunger is liable to rapid deterioration, which impairs the action of the pump and finally renders it inoperative. When pumping mineral oils from considerable depths it even occurs that the grit attacks the packing so eagerly that only after a few hours operation the pump must be withdrawn from the bore for repair and then again lowered, which, as will be understood, seriously reduces the oil production.

Many suggestions have been offered to preclude these inconveniences, but as far as I am aware no sovereign remedy has as yet been found.

My present invention has for its object to effectively protect the packing material of such pumps from corrosion and with this object in view I proceed as described hereinafter for raising mineral oil, although I do not limit myself to this application of my novel means.

It is well known in the art that raising oil through bore holes sunk for this purpose is often effected by means of plunger pumps lowered into the bore, a series of sections or lengths of tubes and rods being successively added to the pump cylinder and to the plunger, respectively. The casing and the plunger of such pumps are provided with a suction valve and with a delivery valve, respectively, and the vertical reciprocation of the plunger rod causes the oil to rise in the tube by which said rod is enclosed.

Now, in accordance with my present invention, the plunger is loaded by a column of liquid (hereinafter called "innocuous" liquid) which has no deteriorating effect on the packing material of the plunger, and which exerts on the plunger a pressure exceeding that brought about on the plunger by the liquid to be raised (hereinafter called "injurious" liquid) during the delivery stroke of the pump. To this end the pump is provided with two pipes or series of lengths of tubes, the one containing the innocuous liquid, the other serving for raising the injurious liquids. Said tubes, or series of sections of tubes, may be disposed side by side, or the one inside the other. In the latter case, the inner tube while serving for raising the injurious liquid acts as plunger rod, whereas the innocuous liquid fills up the intermediate space between both tubes.

The required overpressure of the innocuous liquid on the plunger may be brought about by various means. Said innocuous liquids may, for instance, have a greater specific weight or a greater head than the injurious liquid, or it may be loaded by gas or accumulator pressure. The innocuous liquid may, for instance, be water, but in case the injurious liquid may not be mixed with water I may use purified "injurious" liquid instead. As will be understood, the means to be employed should ensure the required overpressure under all conditions irrespective of actions of the mass, frictional resistances, etc. This may be realized by incorporating in the plunger rod suitable means, for instance, jars, allowing said rod to raise the plunger but preventing it from forcing the plunger downwards during the delivery stroke, so that the driving force on the plunger during this stroke must be supplied by the overpressure of the innocuous liquid. Should said overpressure not suffice to force the plunger down, the pump would stop and the pumping engine would run under no-load condition. If, for instance from inadvertency, the oil delivery pipe should be shut off while the pump engine is running, no pipe fracture can occur, for in this case the plunger will stop as soon as the pressure of the liquid to be raised—abstracting frictional resistances—equalizes that of the innocuous liquid.

When the delivery pipe is disposed inside the pipe containing the innocuous liquid, it would offer serious difficulties to arrange the jars immediately above the plunger. In order that also in this case the innocuous liquid may always have a certain overpressure the inner pipe may be counterbalanced outside the bore and jars may, if necessary, be provided above the point where said pipe is engaged by the counterbalancing means.

The annexed drawing shows, by way of example, longitudinal sectional views of two deep well pumps embodying my invention. I

wish it to be well understood, however, that my invention is not limited to such pumps and that it may be applied whenever it is required to pump injurious liquid against overpressure.

Fig. 1 shows a deep well pump having the auxiliary pipe and the delivery pipe arranged side by side, whereas Fig. 2 is a somewhat diagrammatic showing of such a pump in which the delivery pipe is provided inside the auxiliary pipe.

In Fig. 1, two pipes 2 and 3 are screwed from above into the pump casing 1, a nipple 4 being screwed into the bottom thereof. The lower part of the pipe 2, which forms the pump cylinder, encloses the plunger 5. The ball delivery valve vertically below pipe 3 is designated by 6, the ball suction valve in nipple 4 by 7. Associated with the plunger 5 are the jars composed of a rod 9 having a collar 10 projecting into and slidably mounted in a tubular member 8, but it will be understood that the jars may be of any other suitable construction. From the previous statements it follows that the amount of axial freedom of movement of rod 9 within the tube 8 must exceed the length of stroke of the plunger 5. The pipes 2, 3 and the rod 9 extend to the mouth of the bore.

During the operation of the pump the pipe 2 is filled with innocuous liquid, for instance water, the injurious liquid, (crude oil) being pumped through pipe 3. Owing to its higher specific weight the water exerts on the plunger a pressure which exceeds the oil pressure on the bottom face of the plunger during the delivery stroke thus causing the thin film of innocuous liquid to flow downward past the piston and so preventing contact of injurious liquid with the piston. If necessary, this overpressure may still be increased by applying additional gas or accumulator pressure.

In Fig. 2, the delivery pipe 11 acts at the same time as plunger rod. The plunger 16 is mounted in the cylinder 17 which forms part of the exterior pipe containing the innocuous liquid. The delivery pipe or plunger rod is counterbalanced above the bore by a lever 12 provided with a counterweight and actuated through a beam 13 and a coupling rod 14, jars 15 being interposed between the pivot of said rod and the pipe 11.

The pipe 2 may be employed for washing the pump after the plunger 5 has been withdrawn.

What I claim as my invention is:—

1. A pump comprising a pumping tube, a plunger therein, a plunger rod and a delivery tube, an auxiliary casing surrounding the plunger rod and containing fluid, operating means for the plunger rod, and a jar for connecting the plunger and the operating means; said jar insuring of positive operation of the plunger, by means of said operating means, in one direction only, operation of the plunger in a reverse direction being effected by pressure of the fluid in the auxiliary casing.

2. A pump comprising a pumping tube, a plunger therein, a combined plunger rod and delivery tube, an auxiliary casing surrounding the delivery tube and containing fluid, operating means for the plunger rod, and a jar for connecting the plunger rod and the operating means; said jar insuring of positive operation of the plunger, by means of said operating means, in one direction only, operation of the plunger in a reverse direction being effected by pressure of the fluid in the auxiliary casing.

3. A pump comprising a pumping tube, a plunger therein, a combined plunger rod and delivery tube, an auxiliary casing surrounding the delivery tube and containing fluid, operating means for the plunger rod, and a jar for connecting the plunger rod and the operating means; the plunger and the plunger rod being balanced by a counterweight.

4. A pump according to claim 1, said fluid in the auxiliary casing remaining substantially constant in amount, and unchanged, during operation of the pump.

5. A pump according to claim 2, said auxiliary casing being out of communication with said delivery tube.

6. A pump according to claim 3, said auxiliary casing being out of communication with said delivery tube.

In testimony whereof I affix my signature.

GODEFRIDUS HENDRIKUS CLERKX van KEULEN.