US 20170030072A1

(19) **United States**

(12) **Patent Application Publication** (10) **Pub. No.: US 2017/0030072 A1**

**CORSON** (43) **Pub. Date: Feb. 2, 2017**

(54) **SYSTEM AND METHOD FOR PANELIZED, SUPERINSULATED BUILDING ENVELOPES**

(71) Applicant: **Christian Peter CORSON**, Northport, ME (US)

(72) Inventor: **Christian Peter CORSON**, Northport, ME (US)

(21) Appl. No.: **15/208,033**

(22) Filed: **Jul. 12, 2016**

**Related U.S. Application Data**

(60) Provisional application No. 62/197,931, filed on Jul. 28, 2015.

**Publication Classification**

(51) **Int. Cl.**

| | |
|---|---|
| ***E04B 1/66*** | (2006.01) |
| ***E04B 1/70*** | (2006.01) |
| ***E04D 13/17*** | (2006.01) |
| ***E04C 2/52*** | (2006.01) |
| ***E04D 13/04*** | (2006.01) |

(52) **U.S. Cl.**

CPC ..... ***E04B 1/665*** (2013.01); ***E04C 2/523*** (2013.01); ***E04D 13/04*** (2013.01); ***E04D 13/172*** (2013.01); ***E04B 1/7069*** (2013.01); ***E04B 1/7038*** (2013.01)

(57) **ABSTRACT**

Panelized wall and roof structures for constructing energy efficient buildings. The panelized structures have a structural layer with insulation, an airtight layer providing a primary air barrier and a vapor retarder exterior to the structural layer, a vapor open blanket layer including insulation and attached to the structural layer via structural screws, a weather resistant barrier provided exterior to the blanket layer and including an airtight, water-repelling, vapor-open fabric, and a rain screen provided exterior to the weather resistant barrier and including a drainage plane for channeling moisture away from the weather resistant barrier.

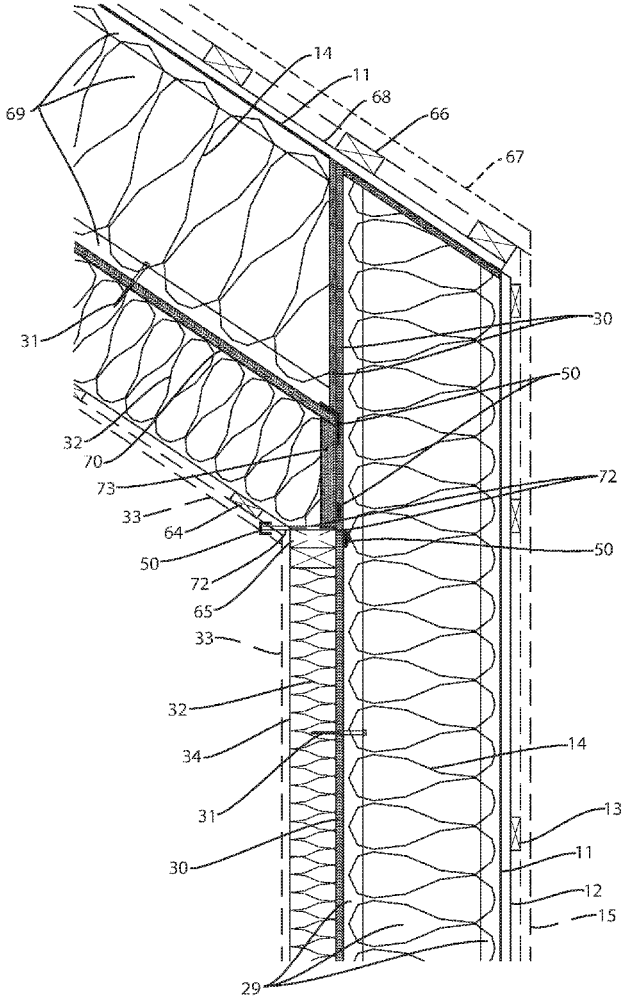

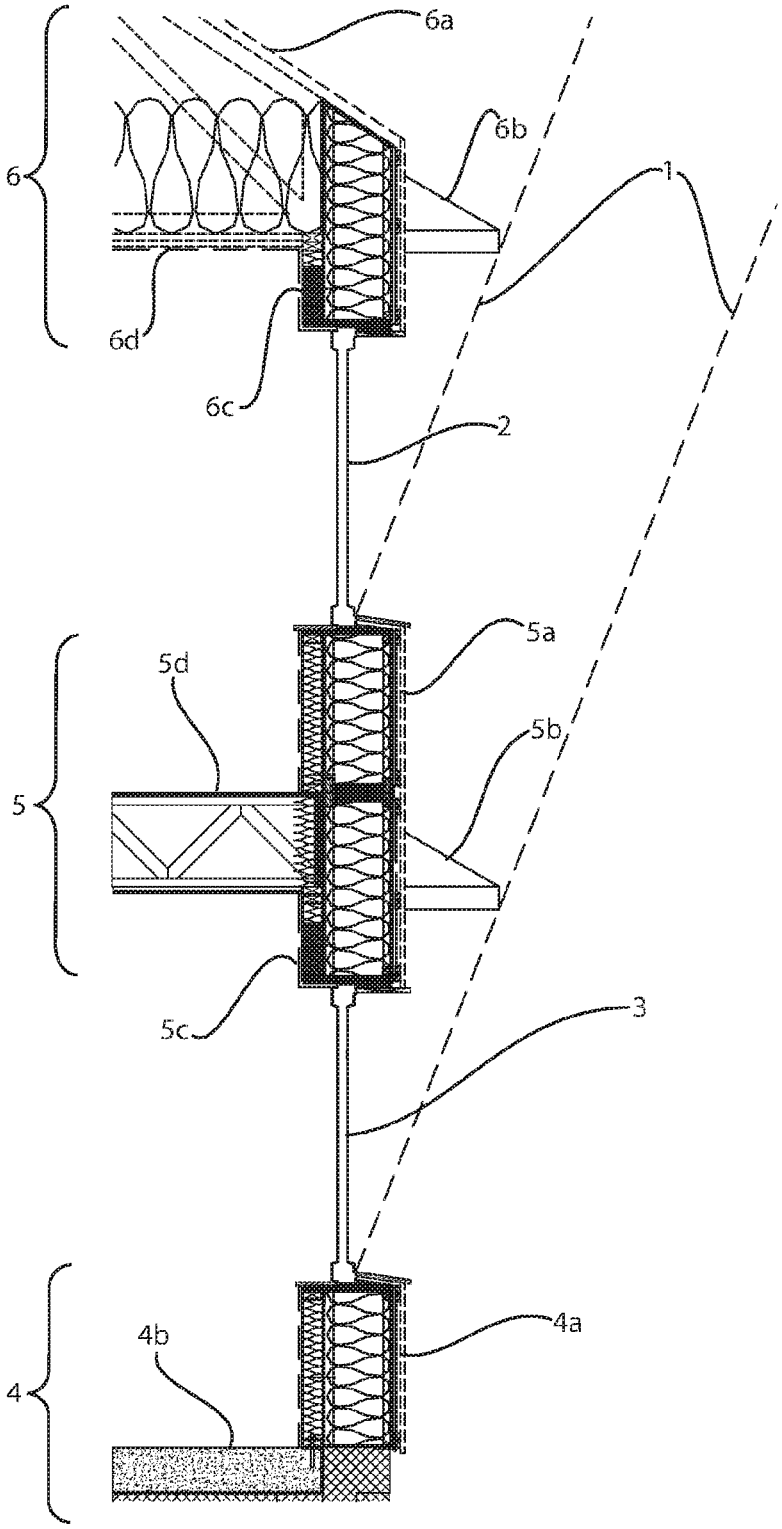


FIG. 1

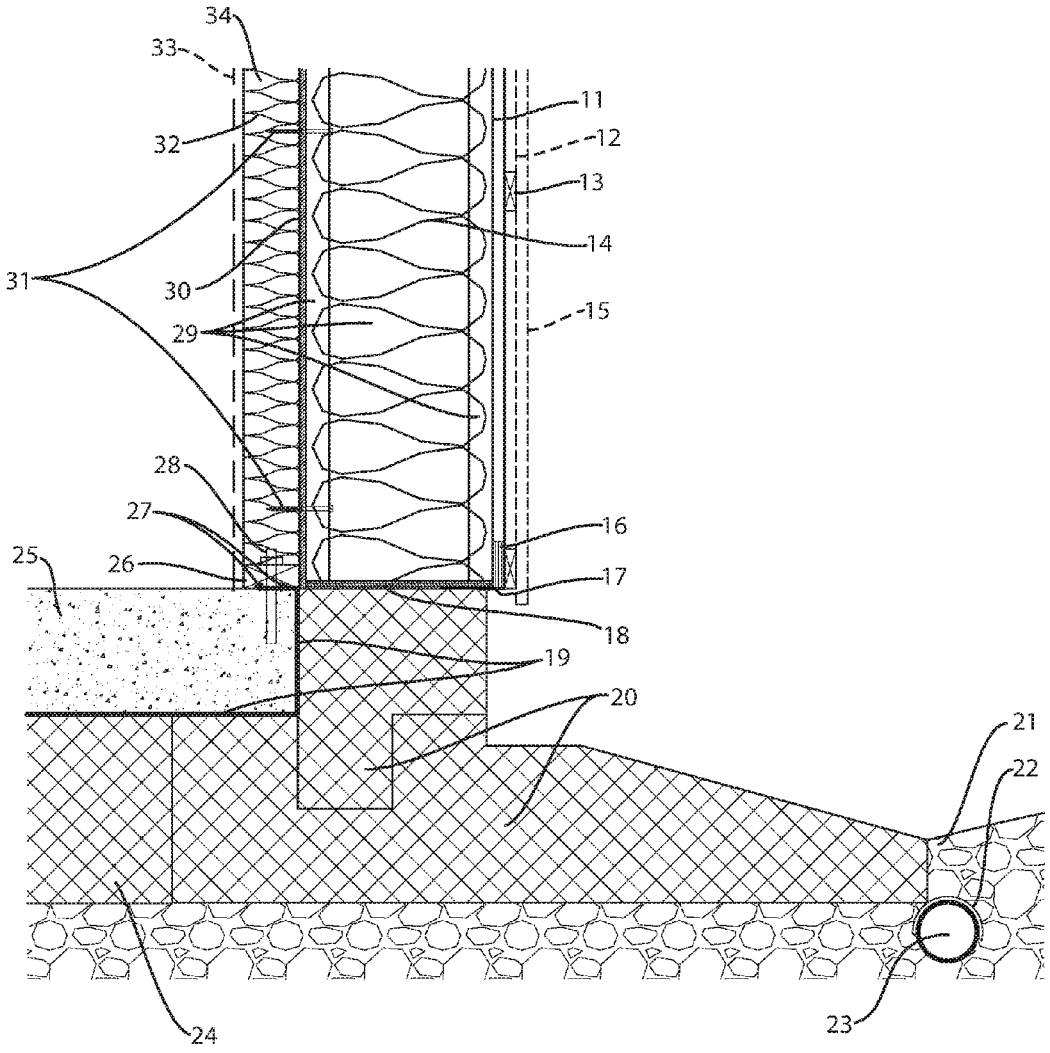


FIG. 2

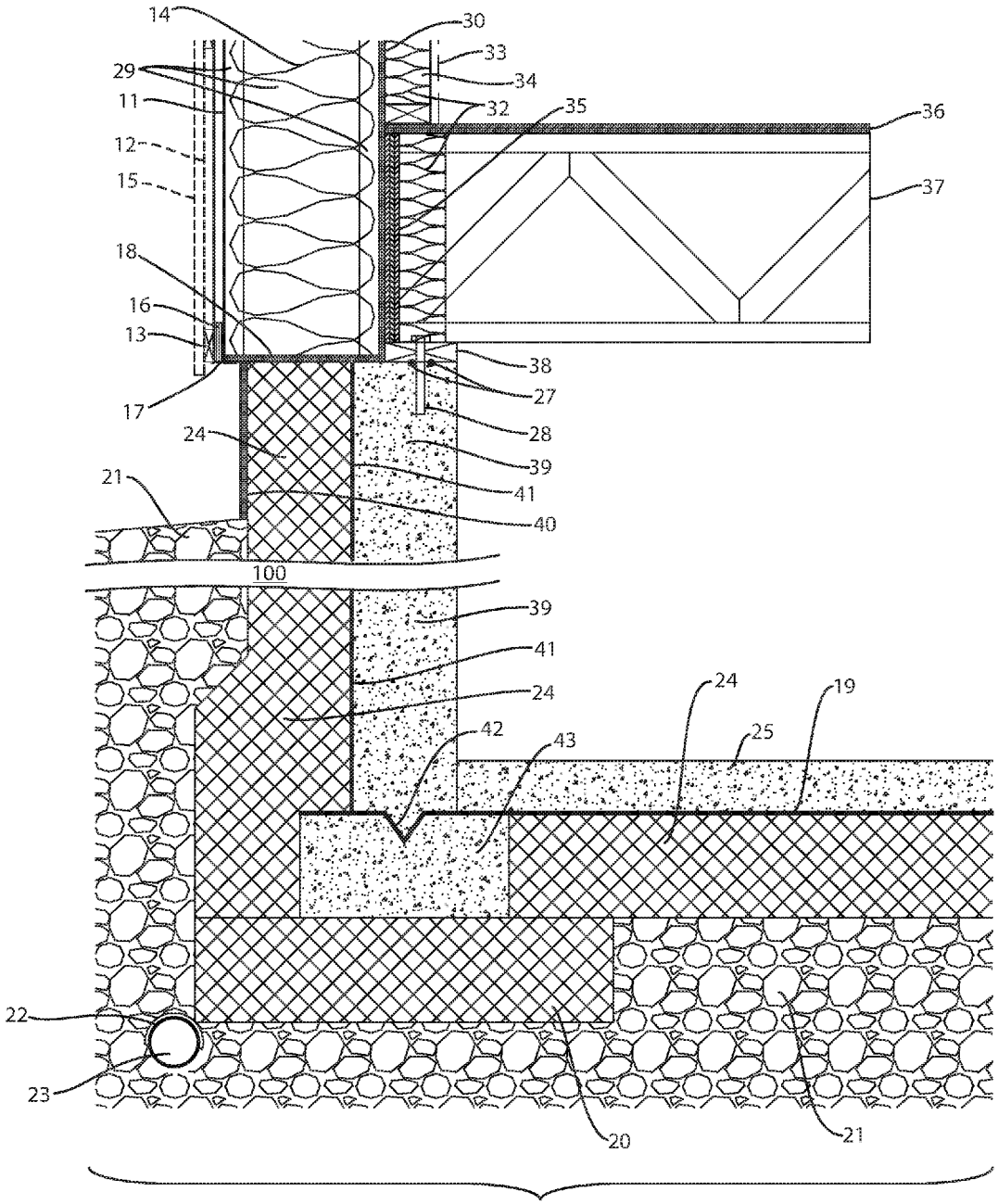
14
30
33
29
34
11
32
35
36
12
15
37
18
16
13
38
27
17
28
24
39
41
21
40
100
39
41
24
24
19
42
43
25
22
23
20
21

FIG. 3

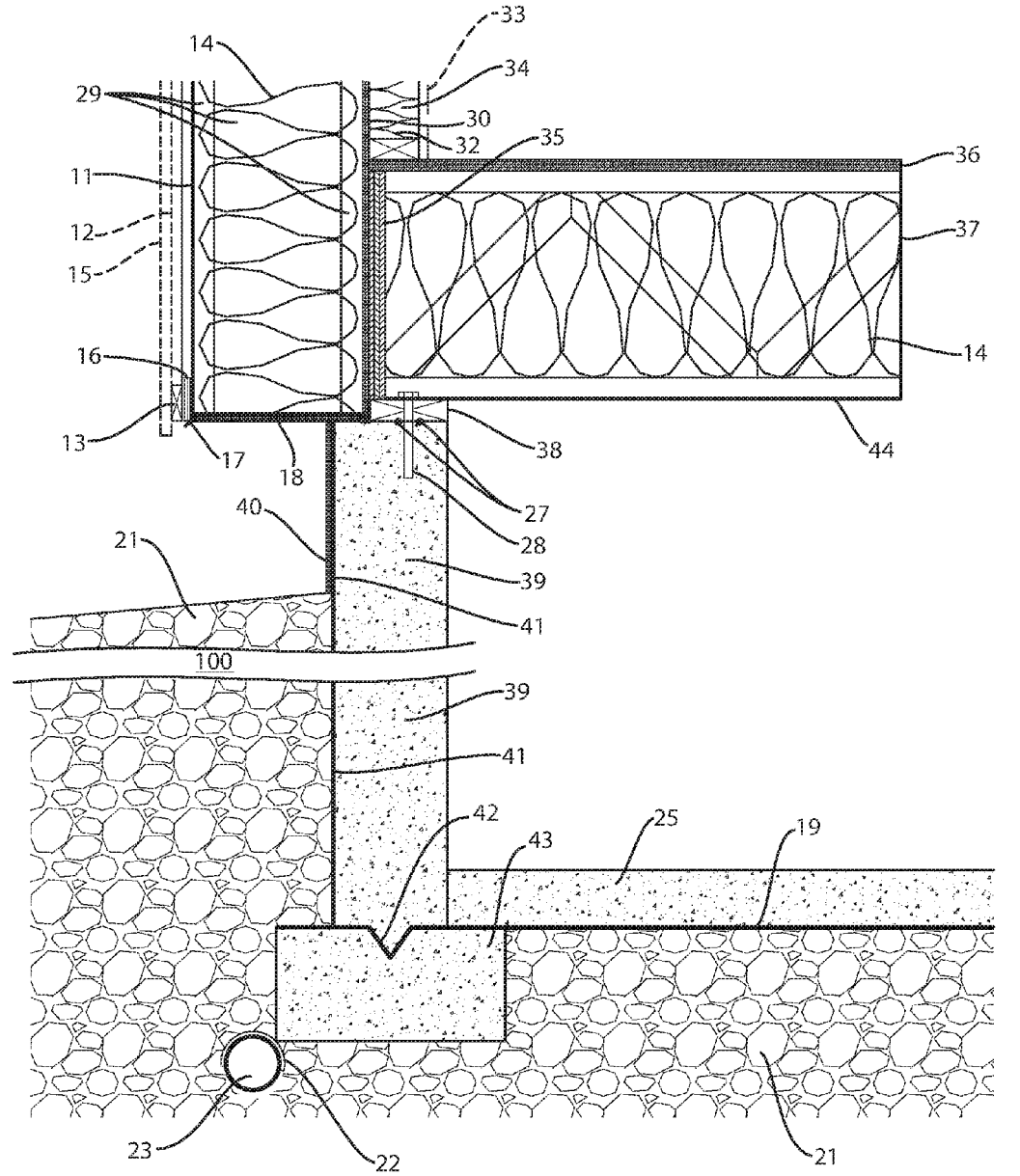
33
14
34
29
30
32
35
36
11
37
12
15
14
16
13
17
18
38
44
27
28
40
21
39
41
100
39
41
42
43
25
19
23
22
21

FIG. 4

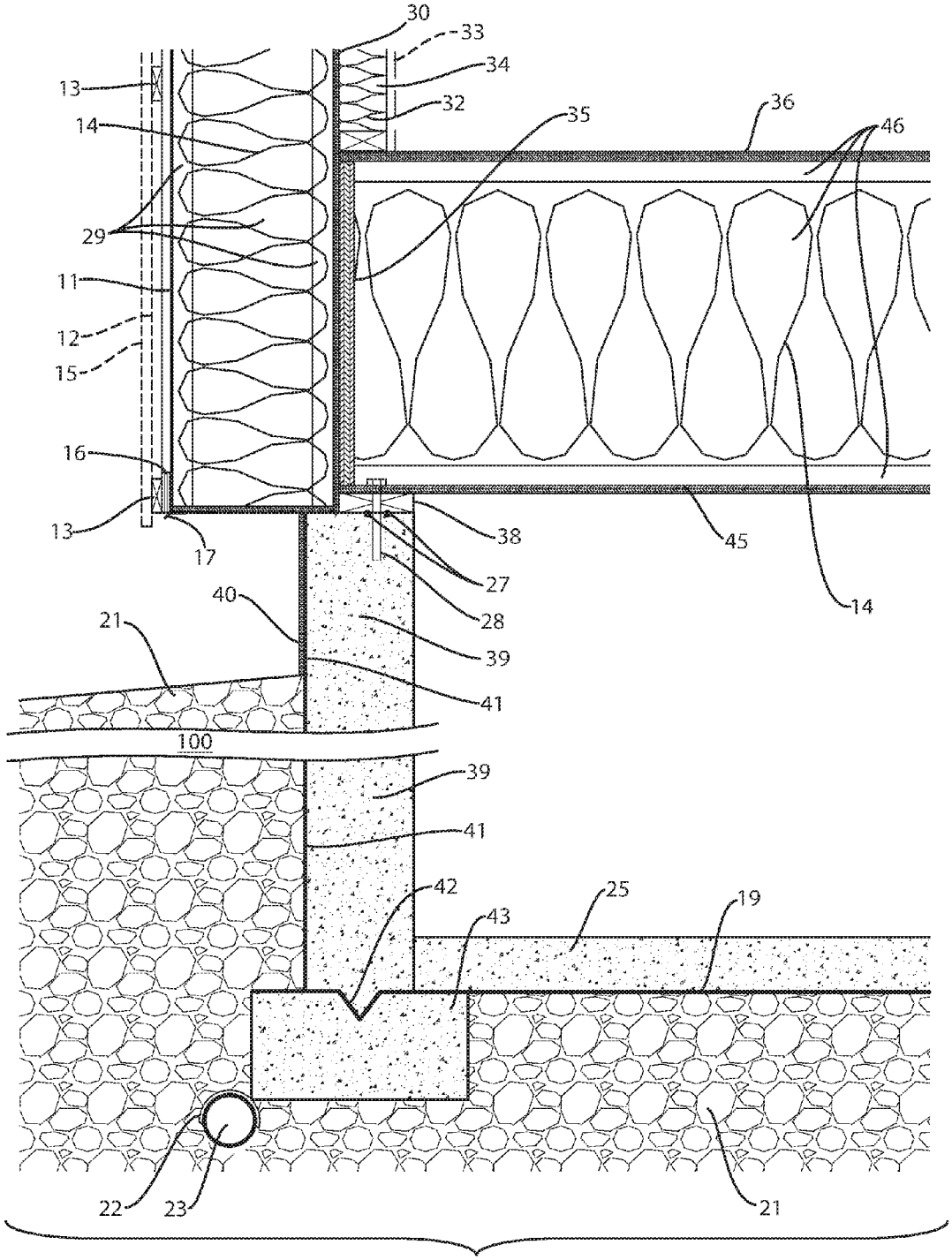
30
33
34
32
35
36
46
13
14
29
11
12
15
16
13
17
38
27
28
40
39
41
45
14
21
100
39
41
42
43
25
19
22
23
21

FIG. 5

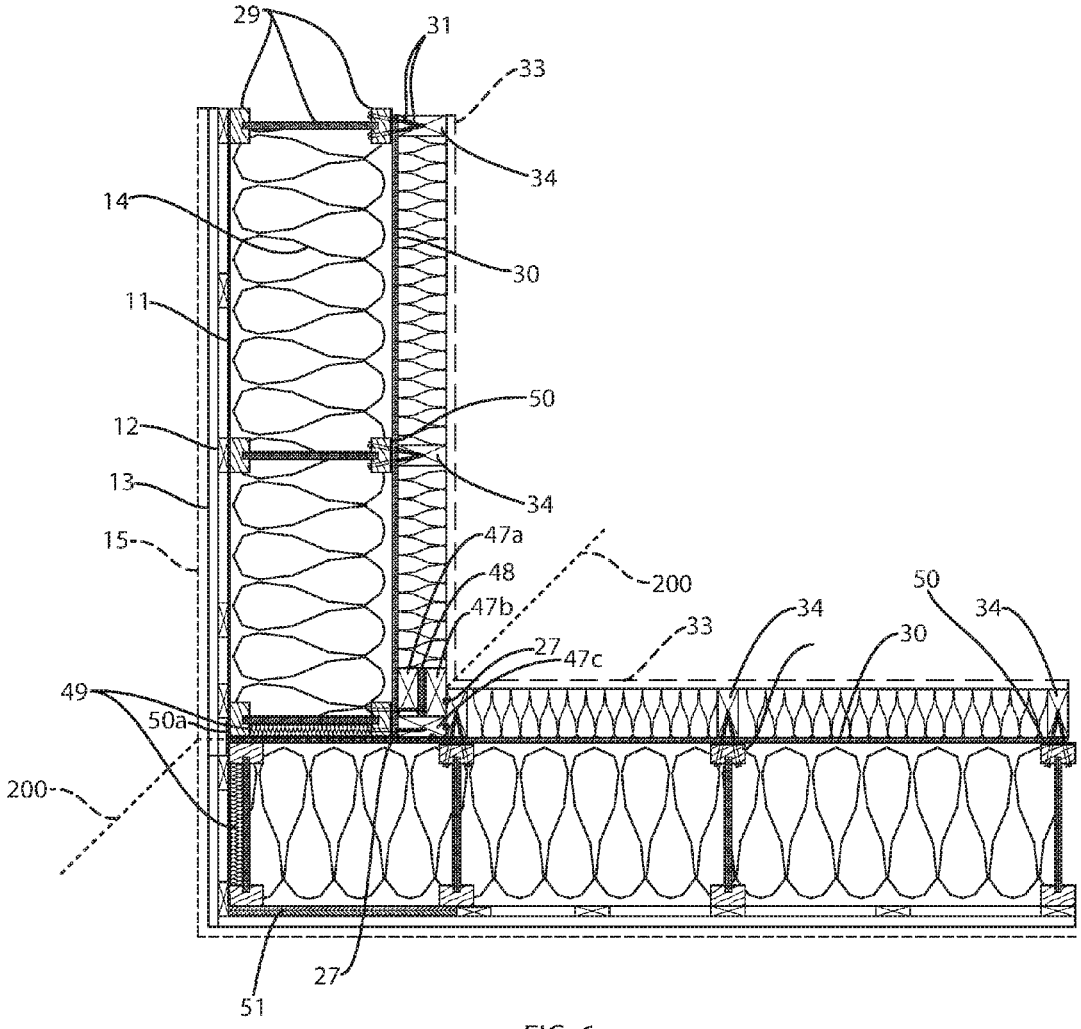
29
31
33
34
14
30
11
50
12
34
13
15
47a
48
200
47b
50
34
34
33
30
27
47c
49
50a
200
27
51

FIG. 6

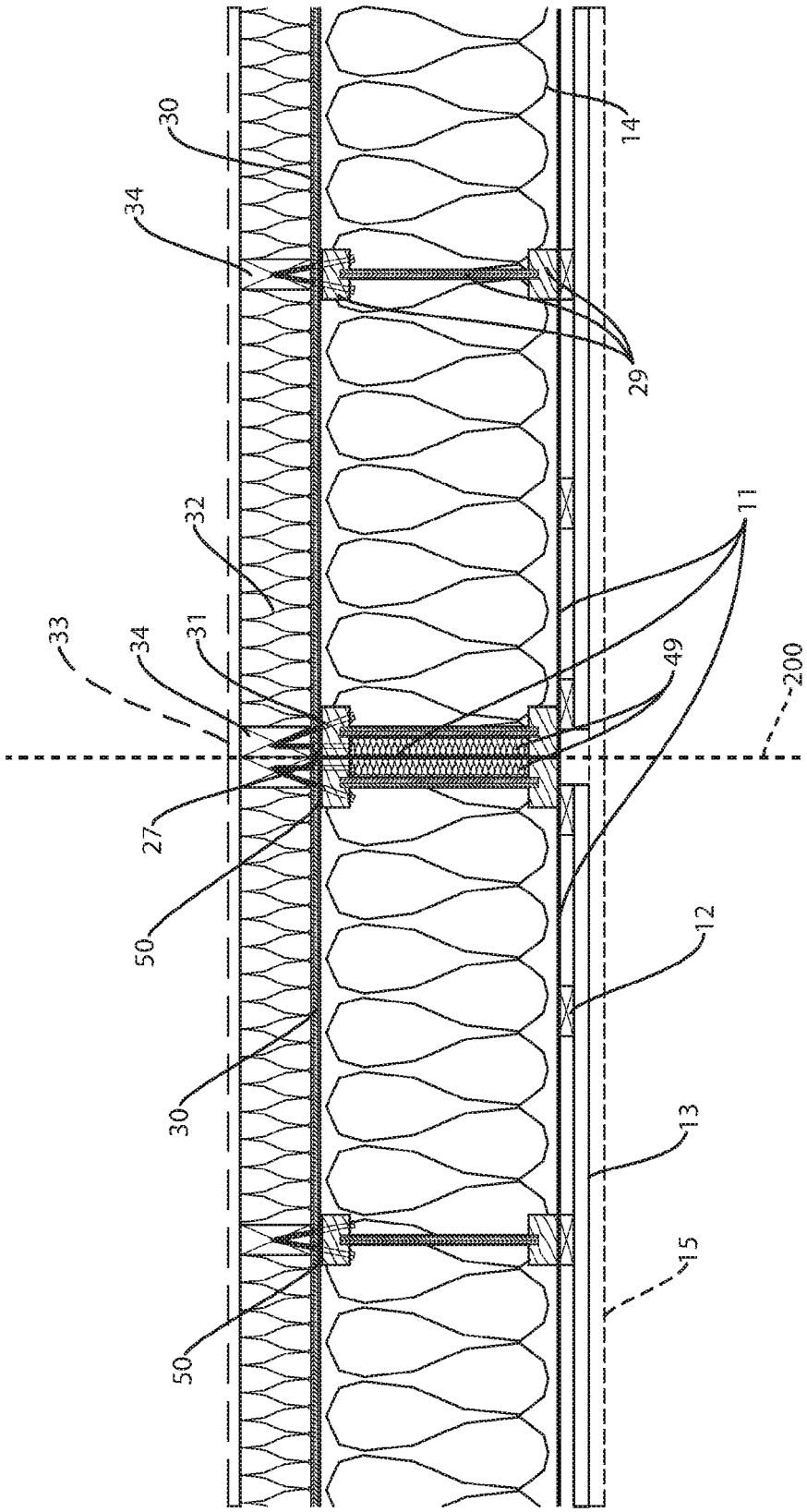


FIG. 7

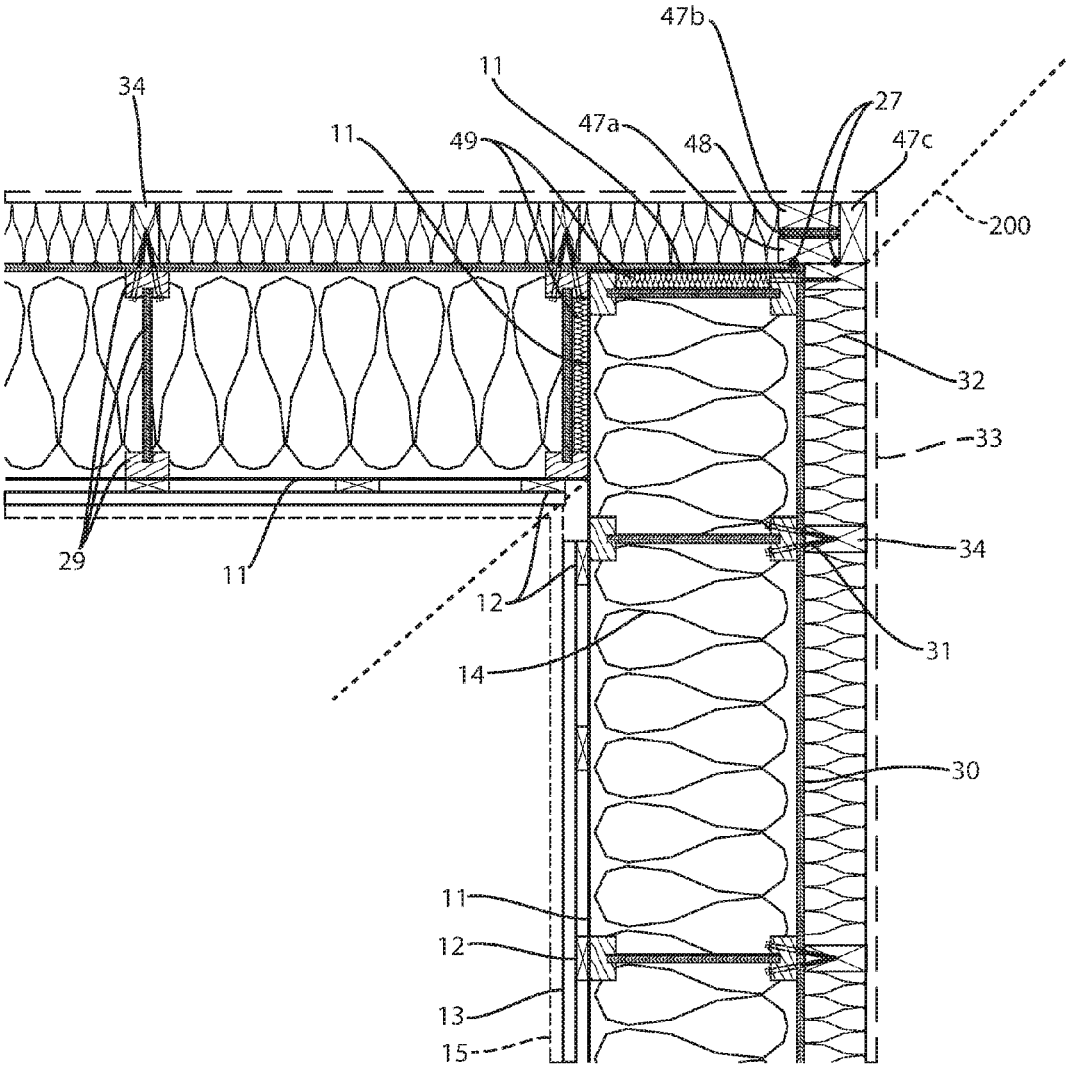
47b
11
34
27
47a
11
49
48
47c
200
32
33
34
29
11
12
31
14
30
11
12
13
15

FIG. 8

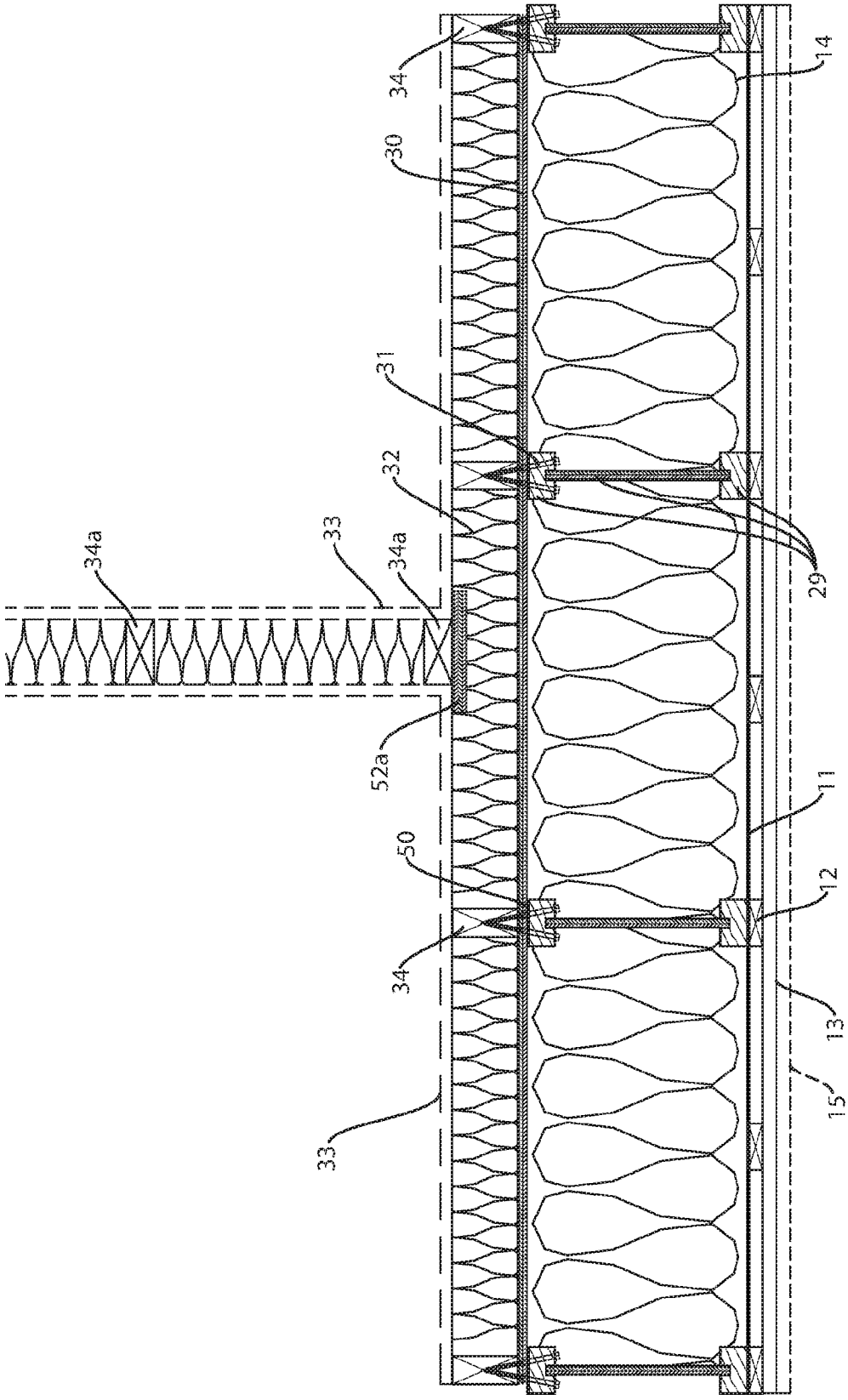


FIG. 9

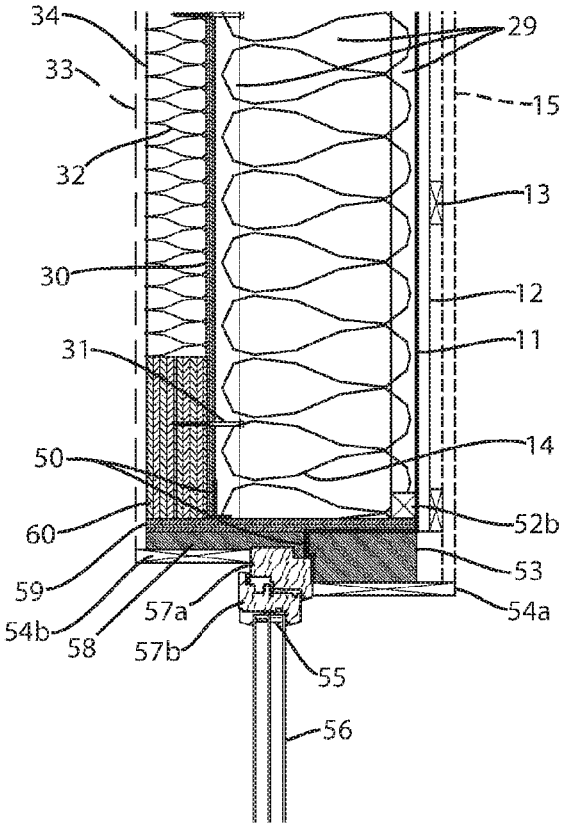


FIG. 10A

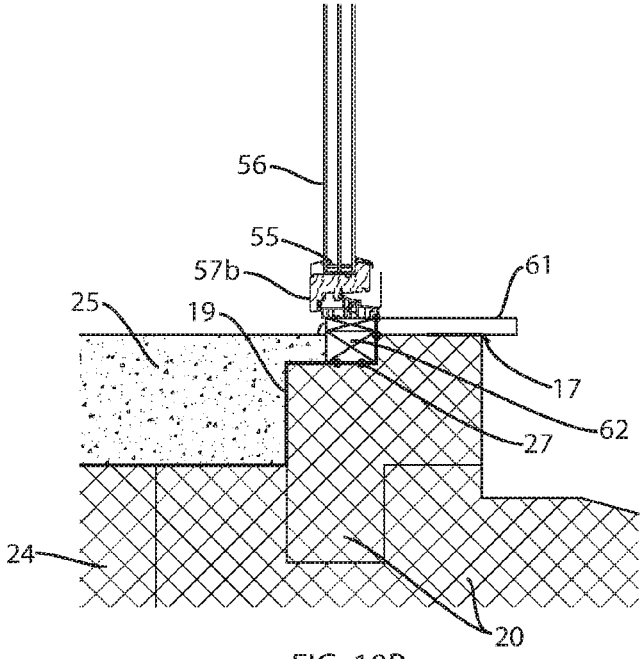


FIG. 10B

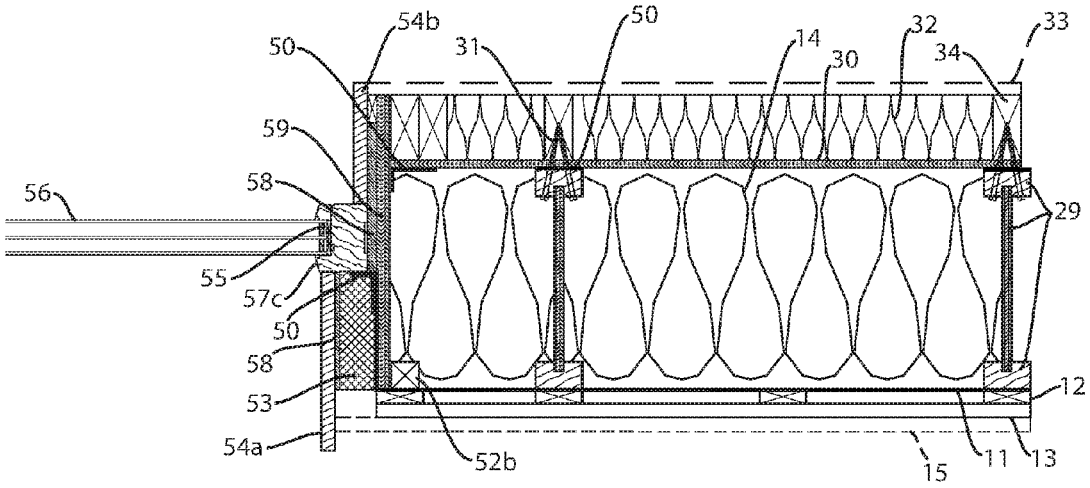


FIG. 11A

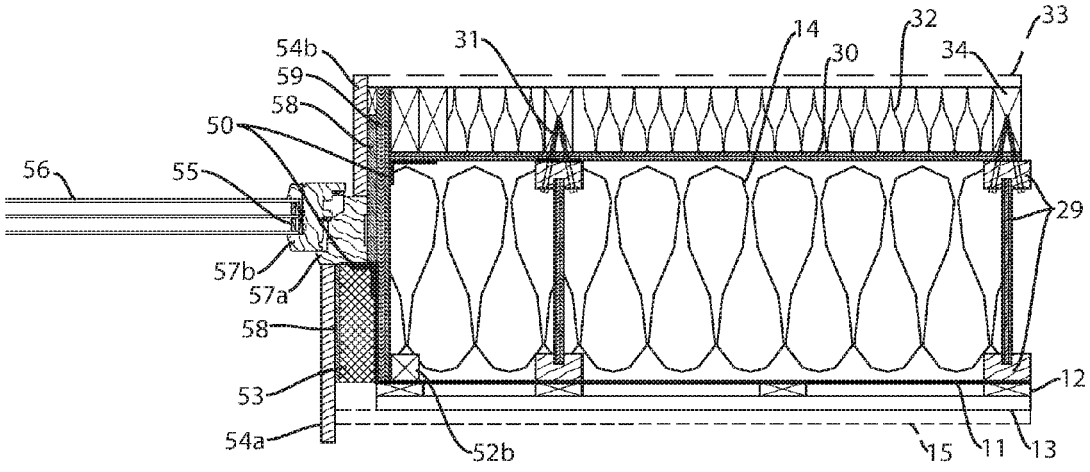


FIG. 11B

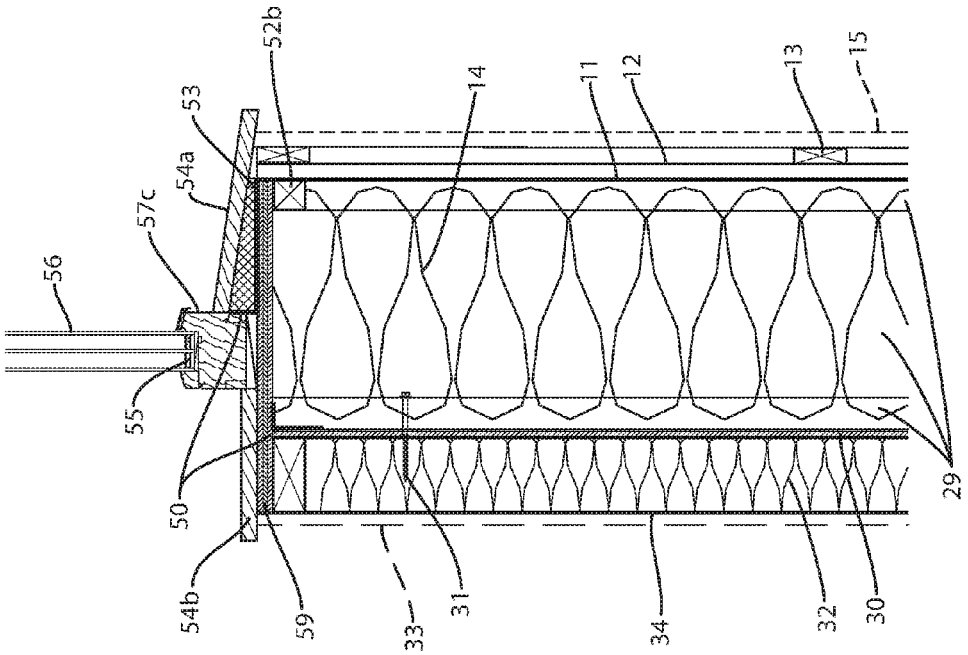


FIG. 12B

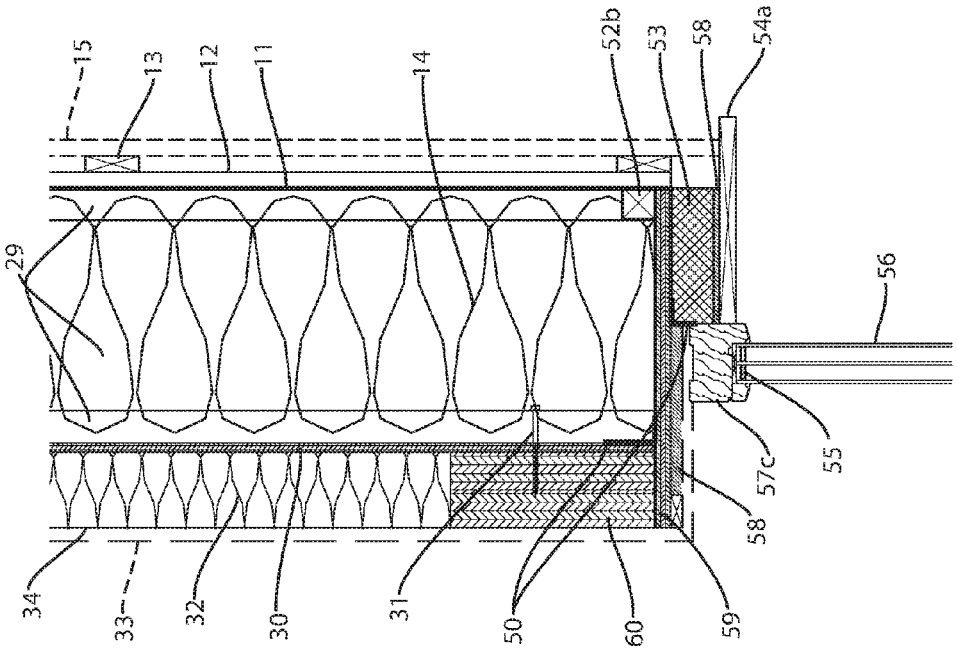


FIG. 12A

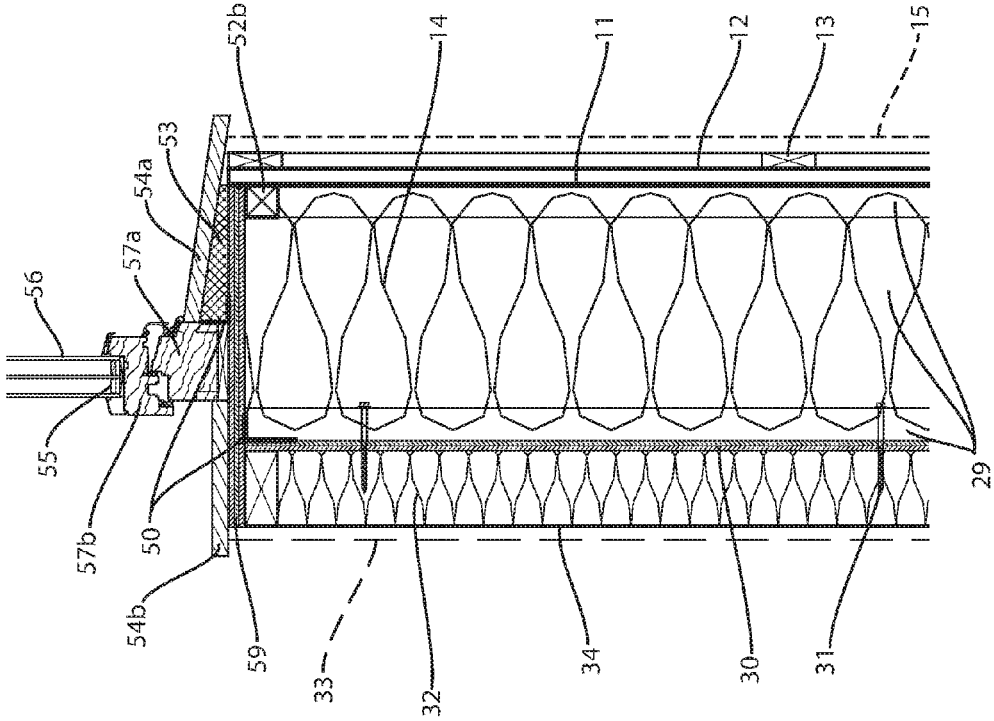


FIG. 12D

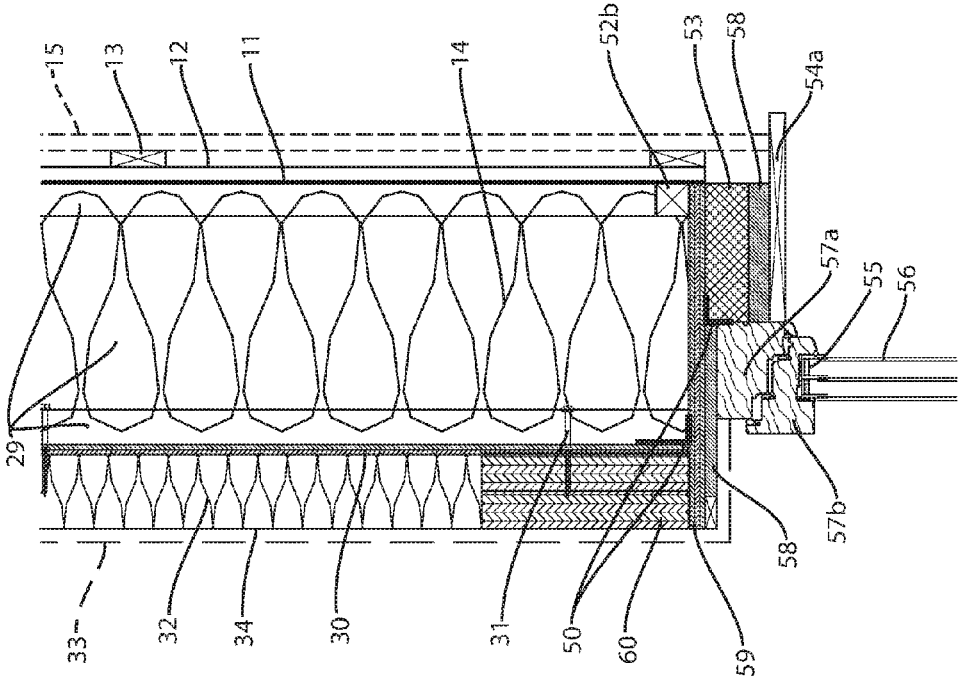


FIG. 12C

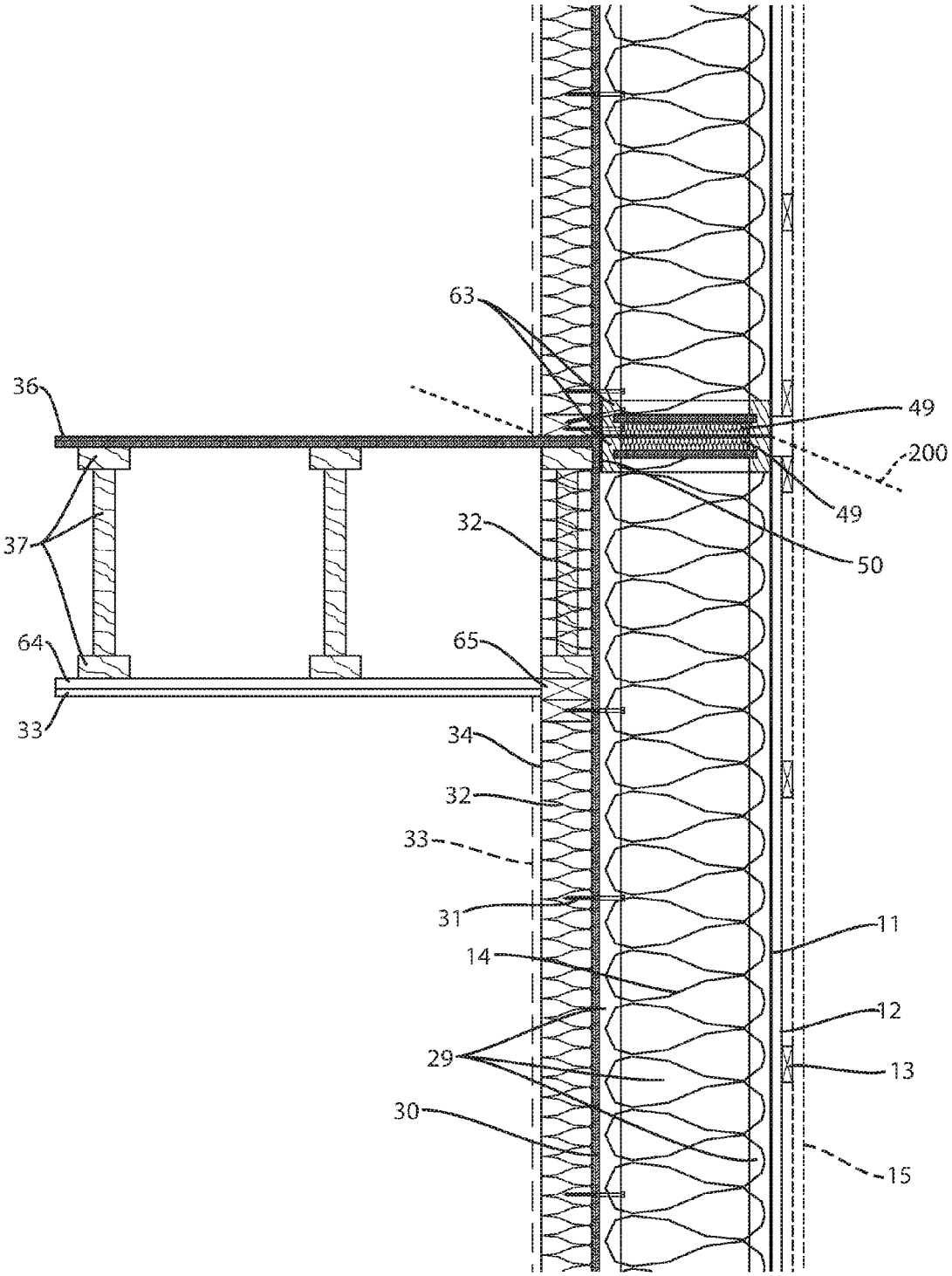


FIG. 13

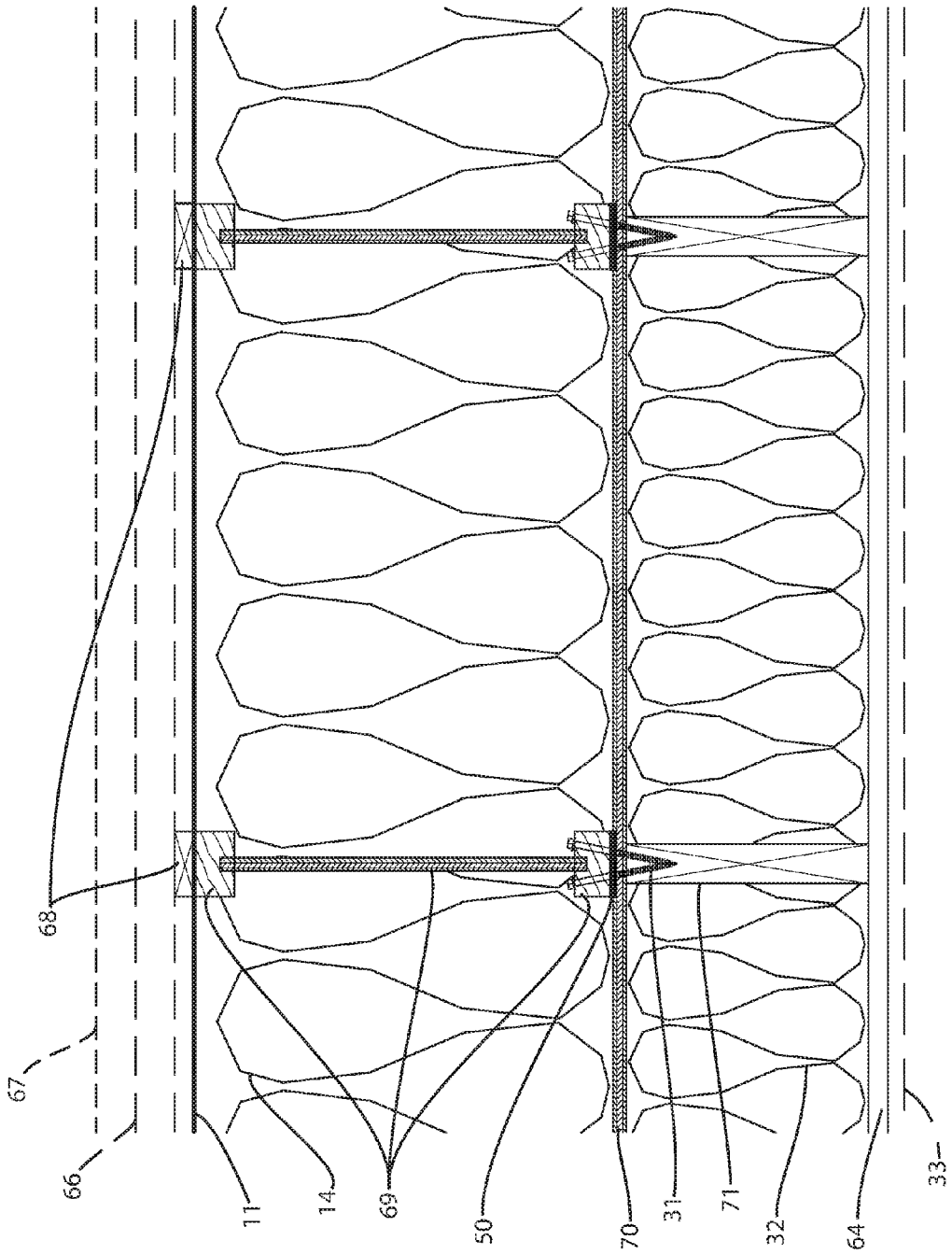


FIG. 14

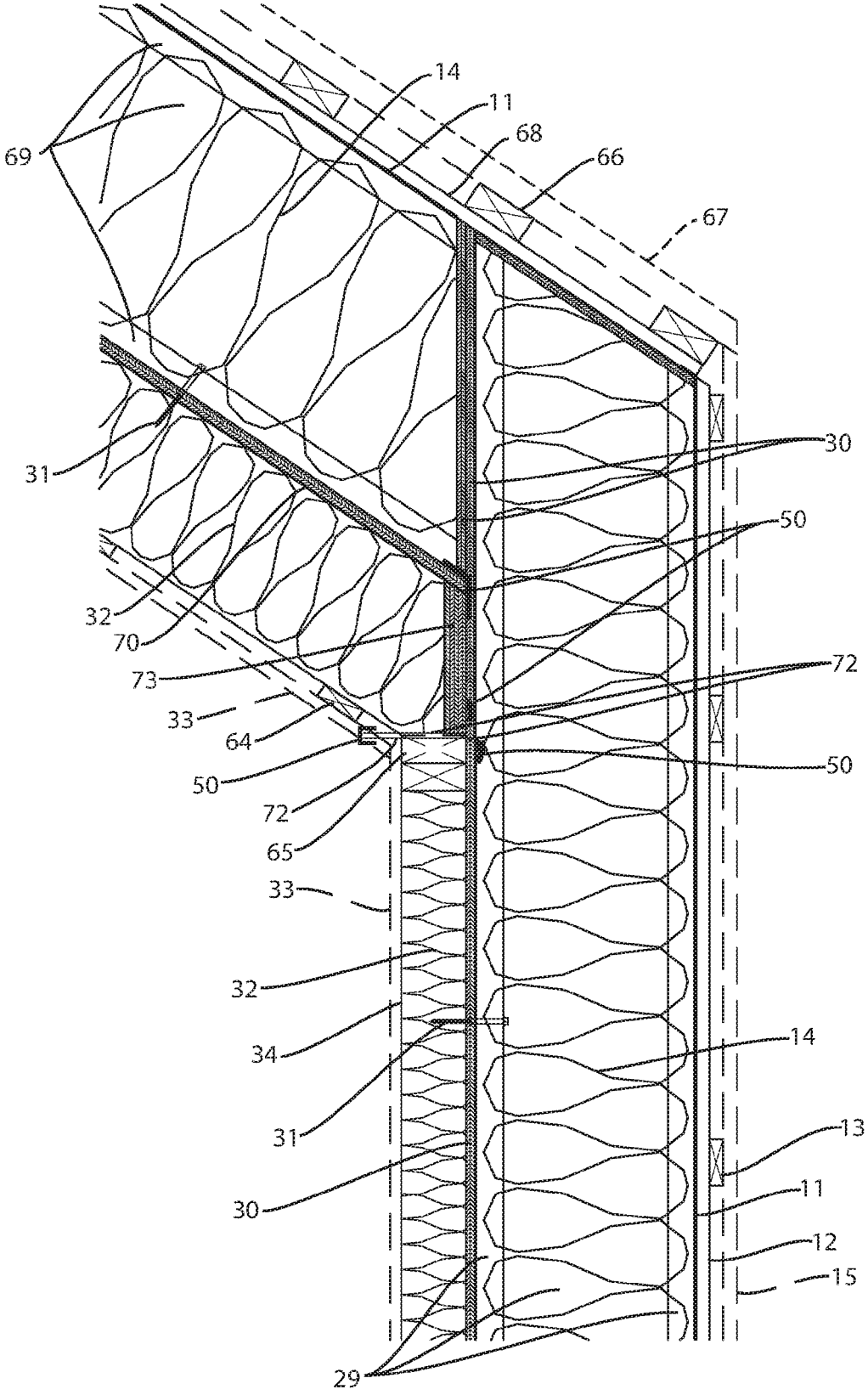
14
11
68
66
69
67
30
31
50
32
70
72
73
33
64
50
50
72
65
33
32
34
14
31
13
30
11
12
15
29

FIG. 15

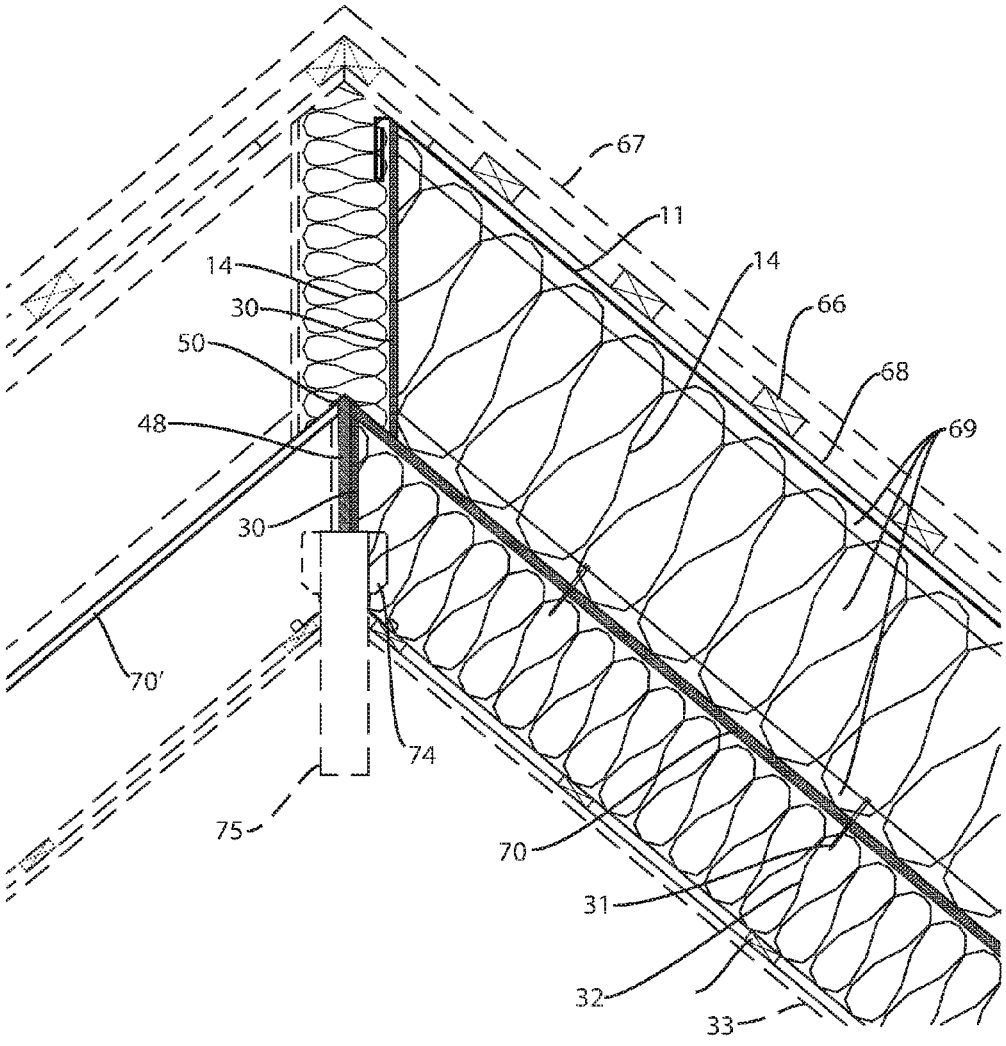


FIG. 16

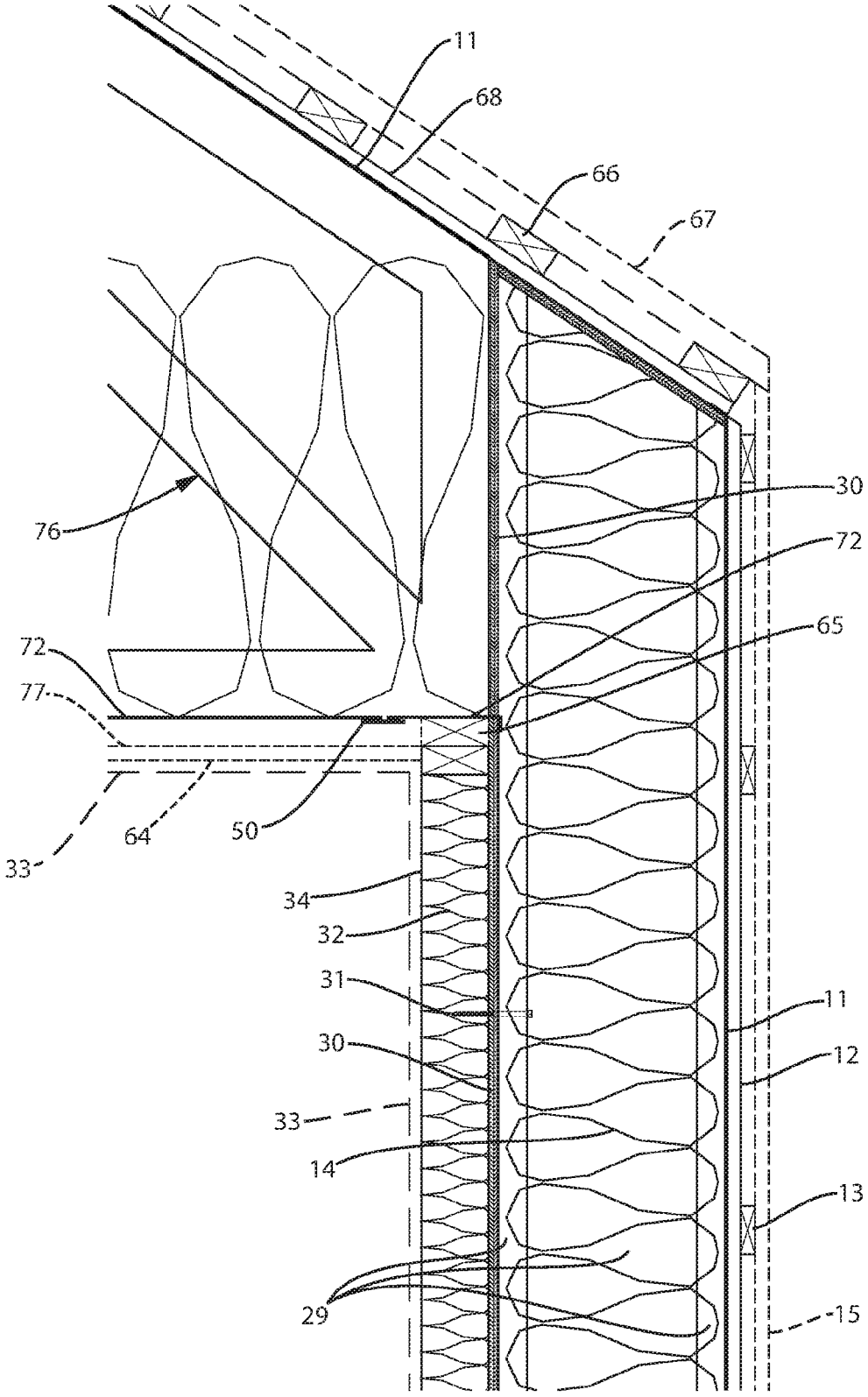


FIG. 17

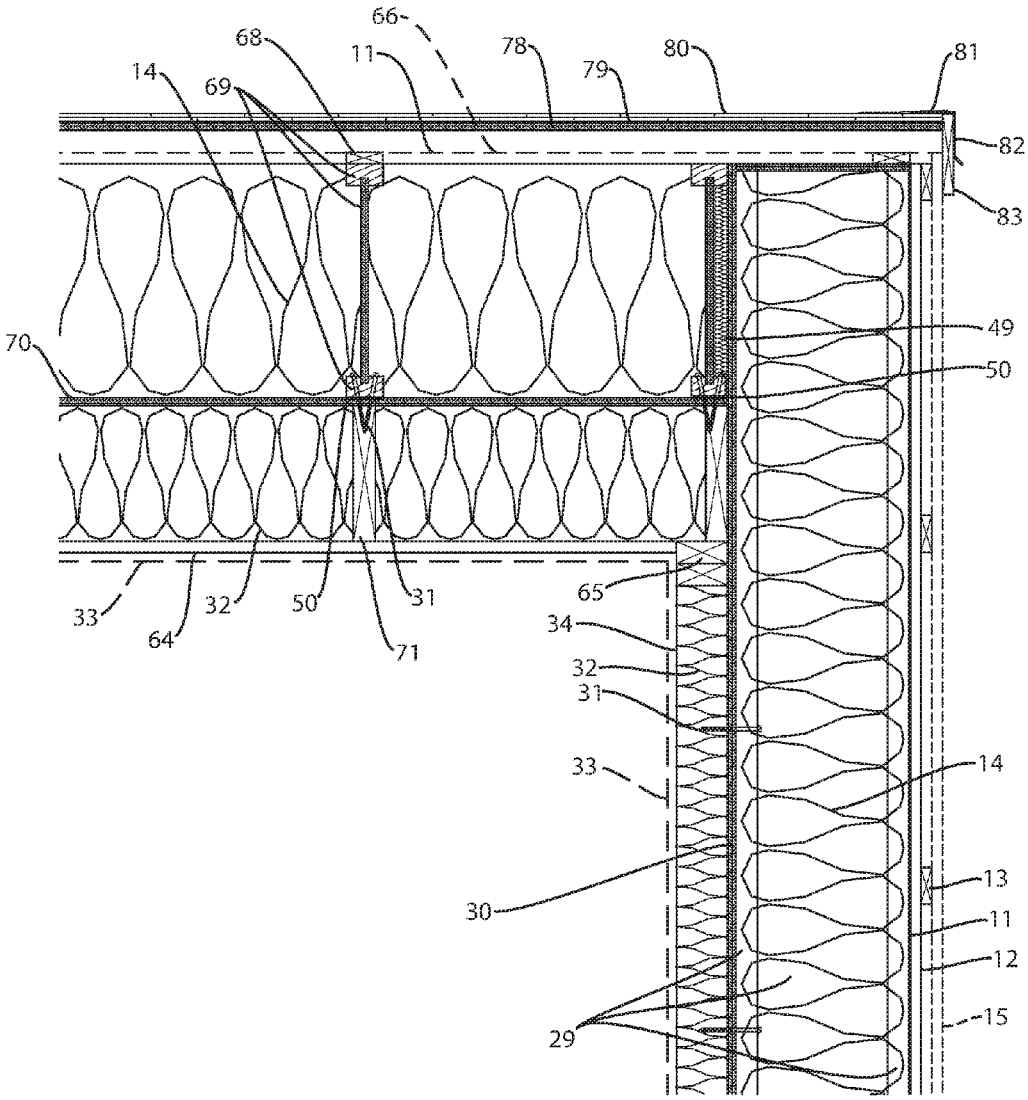
66
68
11
78
80
81
14
69
79
82
83
49
70
50
33
64
32
50
31
71
65
34
32
31
33
14
30
13
11
12
29
15

FIG. 18

# SYSTEM AND METHOD FOR PANELIZED, SUPERINSULATED BUILDING ENVELOPES

## CROSS REFERENCE TO RELATED APPLICATIONS

**[0001]** The present invention claims priority to U.S. Provisional Application Ser. No. 62/197,931 filed on 28 Jul. 2015 and herein incorporated by reference in its entirety.

## FIELD OF THE INVENTION

**[0002]** The present invention relates to the field of construction of energy efficient buildings. Moreover, the present invention relates to panelized, superinsulated building systems and methods.

## BACKGROUND OF THE INVENTION

**[0003]** In the design and construction of buildings, it is well known that energy efficiency and building insulation go hand in hand. Accordingly, numerous types of insulation systems and methods exist. Within typical "stick built" construction using framed lumber, voids are created within walls. In such exterior walls, these voids are often filled with fiberglass, cellulose-based, or foam material which have varied insulative value. Vapor barriers are typically added to such exterior walls in order to enhance the insulative effect. However, due to the nature of such framed lumber, thermal bridging often detrimentally occurs to facilitate heat transfer within walls. As well, a variety of leakage points exist due to difficulties inherent to current vapor barrier technology.

**[0004]** Improvements have been attempted in the form of structural insulated panels (SIPs) which are a high performance building system for residential and light commercial construction. The panels consist of an insulating foam core (e.g., extruded polystyrene XPS or expanded polystyrene EPS foam) sandwiched between two structural facings, typically oriented strand board (OSB). SIPs are manufactured under factory controlled conditions and can be fabricated to fit nearly any building design. The result is a building system that is extremely strong, energy efficient and cost effective. Disadvantageously however, standard SIP technology typically requires spline joints which connect the panels together while allowing thermal bridging to occur.

**[0005]** In order for more new construction to be energy efficient and durable against the moisture-related problems that are sometimes associated with thick, airtight assemblies, new construction methods are required. The assemblies that will perform best from energy and resiliency viewpoints are inherently complex, time-consuming to assemble, and require specialized training to execute effectively.

**[0006]** It would be advantageous to obviate or mitigate these disadvantages such that heat transfer between building interiors and exteriors, thermal bridging, and leakage are substantially reduced or eliminated.

## SUMMARY OF THE INVENTION

**[0007]** The present invention provides a system and method for panelized, superinsulated building envelopes that reduces or substantially eliminates many problems in building construction including heat transfer between building interiors and exteriors, thermal bridging, and leakage. The present invention reduces contributions to climate change due to wasted energy in the built environment. Difficulties in quality control for and time required on site to build complicated building envelope assemblies are minimized by way of the present invention.

**[0008]** The present invention reduces moisture-related issues, including reducing problems from mold inside building envelopes that are not vapor-open to the exterior and improving cladding longevity in building assemblies without a rain screen detail. The present invention also reduces moisture-related problems, including mold, in building assemblies insulated to higher levels than required by building codes.

**[0009]** The present invention provides effective air-sealing of building assembly panels, maintains integrity of the air barrier during and after the construction process, and provides enhanced insulating of "marriage joints" between building assembly panels.

**[0010]** The present invention overcomes difficulties in providing continuity of a weather resistant barrier between building assembly panels and resolves both problems related to vapor open construction of exterior and interior corners and also difficulties in building exterior and interior corners without thermal bridges.

**[0011]** The present invention also provides connections from wall to roof and at window and door supports that are free of thermal bridging.

**[0012]** The present invention enables a window assembly allowing for drainage into the rain screen, behind the cladding.

**[0013]** The present invention provides a service cavity on the inside of a building envelope assembly.

**[0014]** The present invention also provides effective insulation and air sealing of bother concrete slab foundations as well as foam-free pier foundations.

**[0015]** The present invention provides these benefits and solves these problems by using specific assemblies constructed in a controlled shop environment by skilled workers, then assembled on site using prescribed details. Anyone building a new home, new commercial or institutional building, or building significant additions to existing structures may benefit from the present system and method. Because most of the cost is in building and installing the panels, with travel costs as a comparatively minor expense, the system and method of the present invention effectively enables building houses in any location so as to bring low-energy, high-performance buildings to anyone constructing a building.

**[0016]** According to a first aspect of the invention there is provided a system for constructing an energy efficient building, the system includes: at least one panelized structure having a structural layer including a first set of voids and located at an inner area of the at least one panelized structure, the inner area being adjacent to intended living space of the energy efficient building, an airtight layer formed by a first sheathing layer providing a primary air barrier and a vapor retarder exterior to the structural layer, a blanket layer located exterior to the first sheathing layer and formed by a plurality of vertical members with a second set of voids located between each of the vertical members, a weather resistant barrier located exterior to the blanket layer and including a second sheathing layer formed by an airtight, water-repelling, vapor-open fabric, a rain screen located exterior to the weather resistant barrier, the rain screen being adjacent to outdoor space external to the energy efficient building and including a drainage plane internal thereto, the drainage plane for channeling moisture away

from the weather resistant barrier; insulation for placement within the structural layer and the blanket layer; and wherein the at least one panelized structure is air-sealed and insulated within the first and second sets of voids after installation.

**[0017]** According to a second aspect of the present invention there is provided a panelized wall structure for constructing an energy efficient building, the panelized wall structure includes: a structural layer having a first set of voids and located at an inner area of the panelized wall structure, the inner area being adjacent to intended living space of the energy efficient building; an airtight layer formed by a first sheathing layer providing a primary air barrier and a vapor retarder exterior to the structural layer; a blanket layer located exterior to the first sheathing layer and formed by a plurality of vertical members with a second set of voids located between each of the vertical members; a weather resistant barrier located exterior to the blanket layer and including a second sheathing layer formed by an airtight, water-repelling, vapor-open fabric; and a rain screen located exterior to the weather resistant barrier, the rain screen being adjacent to outdoor space external to the energy efficient building and including a drainage plane internal thereto, the drainage plane for channeling moisture away from the weather resistant barrier.

**[0018]** According to a third aspect of the present invention there is provided a panelized roof structure for constructing an energy efficient building, the panelized roof structure for constructing an energy efficient building, the panelized roof structure includes: a structural layer having a first set of voids and located at an inner area of the panelized roof structure, the inner area being adjacent to intended living space of the energy efficient building; an airtight layer formed by a first sheathing layer providing a primary air barrier and a vapor retarder exterior to the structural layer; a blanket layer located exterior to the first sheathing layer and formed by a plurality of vertical members with a second set of voids located between each of the vertical members; a weather resistant barrier located exterior to the blanket layer and including a second sheathing layer formed by an airtight, water-repelling, vapor-open fabric; and a rain screen located exterior to the weather resistant barrier, the rain screen being adjacent to outdoor space external to the energy efficient building and including a drainage plane internal thereto, the drainage plane for channeling moisture away from the weather resistant barrier.

**[0019]** Other aspects and features of the present invention will become apparent to those ordinarily skilled in the art upon review of the following description of specific embodiments of the invention in conjunction with the accompanying figures.

## BRIEF DESCRIPTION OF THE DRAWINGS

**[0020]** Embodiments of the present invention will now be described, by way of example only, with reference to the attached Figures, wherein:

**[0021]** FIG. **1** is a cross sectional side view of a south facing building sidewall from ground to roof which illustrates various building parts where the present invention may be embodied.

**[0022]** FIG. **2** is a schematic cross-sectional side view showing wall o raft slab details incorporating the present invention.

**[0023]** FIG. **3** is a schematic cross-sectional side view showing a heated basement detail having trussed flooring and incorporating the present invention.

**[0024]** FIG. **4** is a schematic cross-sectional side view showing an unheated basement detail having trussed flooring and incorporating the present invention.

**[0025]** FIG. **5** is a schematic cross-sectional side view showing an unheated basement detail with I-beam supported flooring and incorporating the present invention.

**[0026]** FIG. **6** is a schematic cross-sectional top view showing an exterior corner detail incorporating the present invention.

**[0027]** FIG. **7** is a schematic cross-sectional top view showing marriage joint detail incorporating the present invention.

**[0028]** FIG. **8** is a schematic cross-sectional top view showing an interior corner detail incorporating the present invention.

**[0029]** FIG. **9** is a schematic cross-sectional top view showing an exterior wall to partition wall detail incorporating the present invention.

**[0030]** FIG. **10**A is a schematic cross-sectional side view showing a door head detail incorporating the present invention.

**[0031]** FIG. **10**B is a schematic cross-sectional side view showing a door sill to slab detail incorporating the present invention.

**[0032]** FIG. **11**B is a schematic cross-sectional plan view showing a fixed window detail incorporating the present invention.

**[0033]** FIG. **11**B is a schematic cross-sectional plan view showing an operable window detail incorporating the present invention.

**[0034]** FIG. **12**A is a schematic cross-sectional side view showing a fixed window head detail incorporating the present invention.

**[0035]** FIG. **12**B is a schematic cross-sectional plan view showing a fixed window sill detail incorporating the present invention.

**[0036]** FIG. **12**C is a schematic cross-sectional side view showing an operable window head detail incorporating the present invention.

**[0037]** FIG. **12**D is a schematic cross-sectional plan view showing an operable window sill detail incorporating the present invention.

**[0038]** FIG. **13** is a schematic cross-sectional side view showing floor to floor gable wall marriage detail incorporating the present invention.

**[0039]** FIG. **14** is a schematic cross-sectional view through a panelized roof incorporating the present invention.

**[0040]** FIG. **15** is a schematic cross-sectional view through a panelized roof showing eave detail and incorporating the present invention.

**[0041]** FIG. **16** is a schematic cross-sectional view through a panelized roof showing ridge detail and incorporating the present invention.

**[0042]** FIG. **17** is a schematic cross-sectional view through a trussed roof incorporating the present invention.

**[0043]** FIG. **18** is a schematic cross-sectional view through a low slope pitch roof incorporating the present invention.

## DETAILED DESCRIPTION

**[0044]** The present invention is a system and method which provides panelized, superinsulated building envelopes. In general, panel sections in accordance with the invention are shop-fabricated as completed assemblies or as partial assemblies and are installed as components on a building site. Assemblies in accordance with the present invention may include wall, roof, and floor assemblies. Such assemblies provide a new and useful alternative to standard SIPs such that the inventive assemblies are both thermal bridge free and foam free.

**[0045]** All assemblies in accordance with the present invention are designed and constructed to be highly energy efficient, resilient and durable, and to meet the voluntary International Passive House building energy standard and/or the Passive House Institute of the United States building energy standard. It should be understood that all parts of each building component or assembly are equally important to the overall inventive system and method in order to meet ideal building envelope performance goals and the aforementioned energy standard.

**[0046]** With specific reference to the figures below, it should be understood that like parts exists in more than one figure. As such, each like part is numbered identically when like structures are used throughout the various embodiments. For clarity, only the first occurrence of such structures may be described in detail where subsequent figures may not include a repeated description of like structures.

**[0047]** With reference to the drawings, FIG. **1** is a compilation which illustrates a variety of assemblies (shown in cross section) which, once joined together on a building site with typical other building components, form a panelized, superinsulated building envelope embodying the invention. The inventive aspects of the present invention therefore include the inventive assemblies, the building system incorporating the assemblies, and the method by which the assemblies thereby form the panelized, superinsulated building envelope. In particular, FIG. **1** is a cross sectional side view of a south facing building sidewall from ground to roof which illustrates various building parts where the present invention may be embodied. Here, a ground level section **4**, mid-floor section **5**, and roof section **6** can be seen with first floor window **3** and second floor window **2** located between sections. The inventive components in FIG. **1** include panel assemblies **4***a*, **5***a*, **5***c*, and **6***c* which will be further described in more detail related to FIGS. **2** through **18**. Commonly understood components such as foundation **4***b*, suspended flooring **5***d*, roofing structure **6***d*, exterior roofing **6***a* are also shown and which are pertinent to the present discussion as they provide context in terms of implementation of the present invention, though are not of particular importance in their specific design as configurations may change given the particular building architecture and/or site requirements. As well, exterior overhangs **5***b*, **6***b* to shield direct sunlight rays (shown as dotted line **1**) are provided as shading devices which may be sized and located so as to provide solar shading of the exposed window frame.

**[0048]** With regard to FIG. **2**, there is shown a schematic cross-sectional side view showing wall to raft slab details incorporating the present invention. Here, a panelized wall section in accordance with the invention is secured atop a concrete slab **25**. Beneath the slab **25** is foundation insulation **24** preferably formed from 12-inch type II borate treated expanded polystyrene (EPS) foam insulation. Mating pieces of additional foundation insulation **20** surround the periphery of the slab **25** and are placed under the overhanging end sheathing **18**. The additional foundation insulation is preferably formed from 12-inch type IX borate treated EPS foam insulation. As shown, typical groundwork is provided including large composition structural fill **21** and perimeter drain **23** run to daylight with a fabric **22** overlaid atop the drain **23** such that the filter fabric separates granular fill from larger composite structural fill over 4-inch.

**[0049]** As mentioned above, the present invention may be incorporated within a building having a raft slab. As seen in FIG. **2**, a concrete slab-on-grade foundation is a raft slab whereby blocks made from borate-treated EPS (expanded polystyrene) are provided below the concrete. Borate-treated EPS has been found to be the most durable and benign plastic foam for this location. The EPS blocks may be configured using dado and tenon joinery so as to easily lock together block pieces. The interlocked blocks therefore protect the concrete slab from thermal loss, isolating the interior from radon and water vapor, and acting as a concrete form—all in one system. Once the raft slab insulation is placed, an 8-inch steel-reinforced concrete slab is poured which is thick enough that separate footings are not required under point loads. The floor is polished and sealed as a finished floor, or covered with another material. The present invention incorporating such foundation system is certified by the International Passive House Institute to be free of thermal bridging, with a U value of 0.12 $W/m^2K$ (0.021 Btu/hr $ft^2$ ° F.), ≈R 47.6.

**[0050]** During installation, it is advantageous to install the walls on top of the foundation vapor barrier to complete the air barrier. As well, the use of adhesive sealant will complete the air barrier connection from wall to foundation.

**[0051]** The panelized wall section portion of FIG. **2** includes elements which can be grouped into five (5) basic categories. Indeed, all panelized sections discussed herein below in accordance with the present invention includes elements that may also be grouped similarly into such five (5) basic categories. These categories of elements include the structural layer, the airtight layer, the blanket layer, the weather resistant barrier, and the rain screen.

**[0052]** The structural layer forms an inner, structural wall. In FIG. **2**, this can be seen by internal wall **34** which is preferably 2×4 studs arranged 24-inch on center of #2 SPF (spruce-pine-fir) or better per NELMA (Northeastern Lumber Manufacturers Association). The base of internal wall **34** includes a continuous 2×4 bottom plate **26**. The bottom plate **26** secures the panelized wall section to the slab **25** via an anchor bolt **28**. The structural layer may also include internal surfacing of gypsum sheetrock **33** or any suitable interior surfacing product for the given implementation. Within the voids between studs of the internal wall **34**, there is also provided mineral wool insulation **32**.

**[0053]** The interior, structural wall **34** carries all structural loads, with most insulation on the exterior, though it is left uninsulated, as a "service cavity," until after the building envelope is complete so as to facilitate panel attachments, mechanical, and electrical work.

**[0054]** The airtight layer provides a structural diaphragm that is also the primary air barrier and vapor retarder on the outside of the structural layer. In terms of FIG. **2**, this provided by the continuous 2×4 bottom plate **26** being wrapped with a weathertight tape such as Tescon Extoseal® sill tape available from Pro Clima® of Schwetzingen, Ger-

many or any suitable weathertight tape. As well, the anchor bolt **28** is set in epoxy adhesive **27** to ensure weathertight seal of bottom plate **26** to the slab **25**. A first sheathing layer **30** is provided adjacent to the internal wall **34**. This first sheathing layer **30** is preferably constructed of a suitable weathertight coated OSB (oriented strand board) such as 7/16-inch ZIP® sheathing available from Huber Engineered Woods LLC of Charlotte, N.C.

**[0055]** The first sheathing layer **30** is rendered airtight with all joints and nail holes taped with a suitable weatherproof taping such as Tescon Vana® adhesive tape with fleece backing available from Pro Clima® or any suitable weathertight tape. Lastly, a vapor barrier **19** is provided to separate the slab **25** from the exterior insulation **20**, **24**. The vapor barrier **19** may be a continuous ten (10) mil polyethylene sheet or any suitable material that functions as air barrier and capillary break. Thus, a contiguous airtight layer is formed by the first sheathing layer **30** and vapor barrier **19** which are connected in a weathertight manner at the continuous bottom plate **26**. Moreover, it is beneficial that the airtight layer is placed in a protected location, internal to the panelized wall structure.

**[0056]** The blanket layer is an exterior insulating layer that includes vertical members filled between with insulation. It should be noted that the blanker layer is vapor open. As shown in FIG. **2**, each vertical member is an I-joist **29**. Each I-joist **29** is preferably an 11 7/8 inch I-joist arranged 24 inches on center with SPF flanges and OSB webs. Between each I-joist **29** is a void which is filled with a dense pack cellulose insulation **14** or similar suitable insulating material. The blanket layer is held to the structural layer by suitable screws **31** as shown and which are preferably 5/16"×4" RSS™ lag screws fastened at two feet on center and staggered. RSS™ lag screws are a rugged structural screw made of specially hardened steel and available from GRK Fasteners of Schaumburg, Ill.

**[0057]** It should be understood that the "I-joists" referred to herein are an engineered wood product consisting of solid wood or laminated wood flanges and structural sheet material such as plywood or OSB as the web and which are advantageously placed outside the structural wall and air barrier, as support for cladding and insulation. Attaching the I-joists to the structural wall with structural screws thereby also is an advantage as the panelized wall structure relies upon screws as the only structural support for the blanket layer. For purposes allowing air evacuation when installing blown insulation, holes may be drilled in the I-joists of the blanket layer and covered with air-permeable mesh. Cellulose insulation may be installed more densely than normal, at 4.0 to 4.25 pounds per cubic foot, to ensure that such insulation remains in place during transport and for the life of the building.

**[0058]** The blanket layer is insulated with cellulose to a minimum density of 4.0 $lbs/ft^3$, denser than typical to prevent settling in the present invention's larger-than-typical insulation cavities. The hygroscopic nature of cellulose insulation serves as a moisture buffer and a mineral borate additive makes the cellulose fireproof as well as resistant to pests. Testing has shown that over time, the moisture content within the walls fluctuates slightly, tracking environmental conditions, but that it stays far below the levels required for mold growth.

**[0059]** With continued reference to FIG. **2**, the weather resistant barrier is formed partly by a second sheathing layer **11**. This second sheathing layer **11** is made of an airtight, water-repelling, vapor-open fabric that is resistant to outdoor weather. The second sheathing layer **11** should be a vapor-variable product which protects against water vapor movement with a low permeance (e.g., of 0.17 Perms, on the cusp of a class 1 and class 2 vapor retarder, but opens to 13.20 Perms (a class 3 vapor retarder)) which allows for drying in the presence of high moisture content. The membrane is reinforced to allow it to support dense-packed cellulose. Preferably, the second sheathing layer **11** is fabricated from a continuous Solitex Mento Plus® weather resistant barrier from Pro Clima® with all joints taped with Tescon Vana® adhesive tape with fleece backing available from Pro Clima® or any suitable weathertight tape. Additionally, the overhanging end sheathing **18** is also resistant to outdoor weather. Preferably, the overhanging end sheathing **18** is constructed similar to the first sheathing layer **30** and is preferably constructed of a suitable weathertight coated OSB (oriented strand board) such as 7/16-inch ZIP® sheathing and rendered airtight with all joints and nail holes taped with a suitable weatherproof taping such as Tescon Vana® adhesive tape or any suitable weathertight tape. Thus, the second sheathing layer **11** and end sheathing **18** as a bottom plate to encapsulate the blanket layer. Moreover, it should be understood that sheet goods (plywood or OSB) at the top and bottom of the I-joists **29** are provided as top and bottom plates to create a cavity for blown insulation.

**[0060]** The fifth category of grouped elements of the panelized wall section in accordance with the present invention is the rain screen which includes the outermost parts shown in FIG. **2** adjacent the exterior of the second sheathing layer **11**. Vertical strapping **12** is provided over the second sheathing layer **11** and preferably formed by 1×3 SPF arranged 12" on center. Upon the vertical strapping **12** is secured horizontal strapping **13** preferably formed by 1×3 SPF arranged 24' on center. The vertical strapping **12** and horizontal strapping **13** therefore form two layers of furring material in a "flying batten" configuration to create a freely draining "rain screen" drainage plane. The flying battens are off-layout strips formed of the 1×3 strapping as mentioned and are used to keep the second sheathing layer **11** from pushing too far into the rain screen during and after cellulose installation. The final outer layer of siding **15** is provided in any typical manner such as standard ¾ inch wood siding or as desired for the given building's exterior decor requirements.

**[0061]** The vertical strapping **12** provides a gap at the bottom end thereof where wall vent **16** is inserted. Preferably, the wall vent 17 is SV-5 Siding Vent available from Cor-A-Vent, Inc. of Mishawaka, Ind. or any suitable heat-resistant webbing made from profile extruded polypropylene plastic that functions as a drainage mat for moisture collected in the area behind the siding **15**. It should also be noted that a termite shield **17** may be provided as is typical to ward off wood eating insects. It should also be noted that it is advantageous that the I-joists **29** are not bearing the on the concrete slab **25**.

**[0062]** Having discussed above what is fundamentally the basic component of the present invention, namely a panelized wall section, it should be understood that the following discussion of subsequent FIGS. **3** through **18** are combinations of a variety of configurations of panelized wall sections in accordance with the present invention. As such, they are meant as illustrative of some of the possible variations of the

present invention, though other combinations and sub-combinations may be well within the intended scope of the present invention without straying from the invention.

**[0063]** FIG. **3** includes several identical parts as previously shown and described with regard to the panelized wall section portion of FIG. **2**. As such, those identical parts will not be again described, but rather the differentiated parts will be discussed with regard to FIG. **3**. More specifically, FIG. **3** shows a schematic cross-sectional side view showing a heated basement detail having trussed flooring and incorporating the present invention. Here, a section of suspended flooring structure is provided above a heated basement. The suspended flooring structure includes a rimboard **35** abutting the first sheathing layer **30**. Web joists **37** are situated against the rimboard **35** and the bottom ends of each web joist **37** rest upon a sole plate **38**. Subfloor **36** is provided in a known manner across each web joist **37**. In this configuration, it should be noted that the internal wall **34** of the panelized wall section resides atop the subfloor.

**[0064]** As the sole plate **38** is within the heated building envelope, it need not be wrapped as was the bottom plate **26** shown in FIG. **2**. The sole plate **38** is secured in a typical fashion via anchor bolt **28** to the foundation wall **39**. Likewise, in typical fashion, a footing **43** supports the foundation wall **39**. A break **100**, common to this and several following figures, in the foundation wall **39**, foundation insulation **24**, and fill **21** is shown to indicate that the height of the foundation structure may be longer than is shown. As the foundation insulation **24** is foam which would otherwise degrade when exposed to sunlight and weather, a layer of cement board **40** will normally be provided and typically will include a parge coat.

**[0065]** With continued reference to FIG. **3** and forming part of the weather resistant barrier, there is provided waterproofing **41** on the exterior of the foundation wall **39**. Such waterproofing **41** is typically a fluid provided membrane known in the art. Likewise, a capillary break **42** will be provided between the foundation wall **39** and the footing **43**. The weather resistant barrier is thus formed in the embodiment of FIG. **3** by the first sheathing layer **30** contiguously with the waterproofing **41**, capillary break **42**, and vapor barrier **19**.

**[0066]** FIG. **4** is similar to FIG. **3** except that the basement area is unheated. Specifically, FIG. **4** is a schematic cross-sectional side view showing an unheated basement detail having trussed flooring and incorporating the present invention. In such configuration, the weather resistant barrier providing the building's internal envelope excludes the basement area. Here, it should be noted that cellulose insulation **14** is provided within the suspended floor structure among each web joist **37**. Moreover, a membrane **44** is provided under suspended floor structure against the bottom side of each web joist **37**, running atop the sole plate **38**, and sealed to the first sheathing layer **30**. Such membrane **44** is preferably a high performance airtight vapor control layer such as Pro Clima® DA membrane. Thus while the waterproofing **41**, capillary break **42**, and vapor barrier **19** contiguously provide a barrier layer to the unheated basement area, the weather resistant barrier in the configuration shown in FIG. **4** is primarily provided by the membrane **44** and the first sheathing layer **30**.

**[0067]** FIG. **5** is similar to FIG. **4** except that the suspended floor structure is more akin to the panelized wall section. Specifically, FIG. **5** is a schematic cross-sectional side view showing an unheated basement detail with I-beam supported flooring and incorporating the present invention. The I-beams **46** are preferably 24 inches wide and placed 16 inches on center. The I-beams **46** are engineered wood joists such as TJI® Joists available from Weyerhaeuser of Federal Way, Wash. A lower sheathing layer **45** is provided on the underside of the I-beams **46** and is structural in its function as well as forming part of the weather resistant barrier in this embodiment. Like the first sheathing layer **30**, the lower sheathing layer **45** is rendered airtight with all joints and nail holes taped with a suitable weatherproof taping such as Tescon Vana® adhesive tape with fleece backing available from Pro Clima® or any suitable weathertight tape. In this embodiment, the primary airtight layer is formed by the first sheathing layer **30** contiguously with the lower sheathing layer **45**.

**[0068]** A corner connection between two panelized wall sections in accordance with the present invention is shown in FIG. **6** as a schematic cross-sectional top view showing an exterior corner detail. Dotted line **200** denotes the panel break between the two panelized wall sections. Here, the screws **31** can be seen attaching each I-joist **29** to studs in of the internal walls **34** so as to attach the blanket layer to the structural layer. Because such screws **31** can effectively break the airtight layer, portions of taping **50** are provided suitable to prevent leakage at those locations. Taping **50***a* is also provided at the exterior connection between panelized wall sections.

**[0069]** With further regard to FIG. **6**, the ends of each panelized wall sections can be seen to include insulation board **49** which is light weight stone wool insulation board such as ProRox® SL **960** made by ROXUL INC. of Milton, Ontario. Structural integrity of the panelized wall sections at the corners is enhanced by the addition of corner sheathing **51** which may be formed from a section of OSB. At the corner interior, structural integrity is provided by a C-stud formed by SPF studs **47***a*, **47***b*, **47***c* arranged in a C-configuration with a foam insulation **48** located within any void created at the center of the C-stud. In this configuration, the airtight layer is formed by each first sheathing layer **30** and assured by taping **50**, **50***a*.

**[0070]** At outside corners of walls, holding I-joists back from the ends of the airtight layer facilitates air sealing the vertical seam at the outside corner where the airtight layer of two panels meet. It may be useful to build one panel with extra second sheathing layer **11** to be unfurled and sealed to the adjacent panel after air sealing is complete. It is also possible to use a solid sheet of sheathing material on one face only of the rain screen layer, to facilitate panel connections while allowing the wall to remain vapor-open at the adjacent face.

**[0071]** FIG. **7** is a schematic cross-sectional top view showing marriage joint detail between panelized wall sections according to the present invention. Again, dotted line **200** denotes the panel break. Here, the insulation boards **49** are seen to abut. As well, it should be understood that the second sheathing layer **11** is provided between abutting insulations boards **49**. Taping **50** assures the airtight layer is contiguous between each first sheathing layer **30**. It may be also useful in configurations such as this, where two wall panels meet in line, to break the panels off-layout (e.g., at 12" for 24" on center stud layout) to facilitate air sealing at those locations. As well, it may be useful to build one panel

with extra second sheathing layer **11** so as to be unfurled and sealed to the adjacent panel after air sealing is complete.

**[0072]** FIG. **8** is a schematic cross-sectional top view showing an interior corner detail incorporating the present invention. Here, an internal wall **34** is seen wrapping around an end of one panelized wall section where a C-stud is formed by studs **47***a*, **47***b*, and **47***c* so as to provide structural integrity to the corner section. It should also be noted that the second sheathing layer **11** extends across both insulation boards **49**.

**[0073]** At inside corners of walls, holding I-joists back from the inside corner may allow workers to reach into the deep framing cavity to air-seal the vertical connection at the inside corner. It may be useful to build one panelized wall section of the inside corner with extra second sheathing layer **11** to be unfurled and sealed to the adjacent panel after air sealing is complete. As well, it may be useful at inside corners of walls to connect the rain screens at adjacent panels with an L-shaped assembly of OSB or other sheet stock, to provide a nailing base for siding.

**[0074]** FIG. **9** is a schematic cross-sectional top view showing an exterior wall to partition wall abutting against one panelized wall section in accordance with the present invention. In this configuration, the weather resistant barrier formed by first sheathing layer **30** remains intact and uninhibited by a partition wall **34***a*. Here, an end stud of the partition wall **34***a* is joined to the panelized wall section by way of a backer sheet **52***a* which may be a section of plywood provided as a backing to drywall **33** and into which the end stud of partition wall **34***a* may be suitably fastened by way of screws.

**[0075]** FIGS. **10**A and **10**B illustrate a sliding glass doorway within a panelized wall section embodying the present invention. In particular, FIG. **10**A shows a schematic cross-sectional side view showing a door head detail while FIG. **10**B is a schematic cross-sectional side view showing a door sill to slab detail.

**[0076]** With reference to FIG. **10**A, a nailer **52***b* is shown which may be formed by a 1½"×1½" section of SPF and to which a plywood buck **59** may be suitably fastened. The plywood buck **59** is a section of plywood suitably wrapped with a weathertight tape and creating a window buck and which is taped via taping **50** to a header **60** to create a contiguous air barrier as part of the overall weather resistant barrier. The header **60** provides structural integrity to the door opening and is integrated into the edge of internal wall **34** adjacent the plywood buck **59**. Outer door frame **57***a* operatively integrates with inner door frame **57***b* in a known manner.

**[0077]** Window and door bucks (i.e., framing elements that surround and support the fenestration) may be of two main parts, inner bucks and outer bucks. The inner bucks are the structural support for the fenestration, and are from 1⅛" to 1½" thick, located inside the structural wall rough opening, extending to the inside of the structural wall. The outer bucks are thinner, from 7/16" to ¾" thick, placed outside and overlapping the inner bucks, extending to the outside of the blanket layer. The buck assembly is wrapped with one or more layers of solid wood to stiffen the assembly and to provide a nailing surface. The two-step buck assembly serves to minimize thermal bridging, provides positive placement for the fenestration, and allows for insulation and drainage around the window frame.

**[0078]** Glass **56** is preferably at least double paned with a warm edge "Swiss spacer" **55** provided so as to proved enhanced insulative value. As well, triple-pane glass panels perform even better than the well-insulated frames it is preferably that all exterior doors to be glass when used in the context of the present invention. Gaps between the plywood buck **59** and the outer **54***a* and inner **54***b* trim boards is filled respectively with foam type insulation **53** and **58** respectively. In particular, insulation **53** is preferably in the form of a high quality insulating foam panel which may be easily fashioned into the particular shape as shown, while insulation **58** may be in the form of water cured butyl fired urethane foam which may be injected into the corresponding space. In this manner, insulation **53** may be wrapped as shown with taping **50** to further enhance the airtight layer. It should be noted that windows are placed near the center of the wall thickness which may provide aesthetic benefits as well as space for post-installation window treatments.

**[0079]** The high performance panelized wall sections of the present invention relatedly require high performance windows and exterior doors. The present invention therefore works best in conjunction with exterior doors that seal securely against air and water infiltration. As well, triple-pane glass panels are preferred. It is also preferable that all exterior doors to be glass when used in the context of the present invention.

**[0080]** FIG. **10**B shows the opposite end from FIG. **10**A where an exterior sill **61** abuts a lower frame **62** fabricated preferably from a polyurethane product based on rigid foam with a high thermal insulating value such as Purenit® available from Puren gmbh of Überlingen, Germany. A vapor barrier **19** is contiguously provided under the lower frame **62** and along the slab **25** adjacent to foundation insulations **20**, **24**. In this manner, the airtight layer is formed by the double pane glass **56**, spacer **55**, inner door frame **57***b*, and vapor barrier **19**. In general, doors are preferably placed so they bear partly or in whole on the concrete slab.

**[0081]** FIGS. **11**A through **12**D show variations substantially similar to the structure already shown and described in FIGS. **10**A and **10**B, but related to fixed and operable windows.

**[0082]** FIGS. **11**A and **11**B are schematic cross-sectional plan views showing, respectively, a fixed window detail and an operable window detail incorporating the present invention with similar structure and function of elements shown and described with regard to FIGS. **10**A and **10**B. It should be noted in both the placement of second sheathing layer **11** extends around nailer **52***b* and the insulation **53** thereby ensuring a contiguous airtight, water-repelling, vapor-open barrier to the blanket layer in either configuration.

**[0083]** FIGS. **12**A through **12**D are substantially similar to the header and sill configurations of FIGS. **10**A and **10**B except that these additional figures schematic cross-sectional side views showing a fixed and operable window head and sill details incorporating the present invention, thus parts are similarly labeled. In each, it should be understood that the airtight layer maintains the building envelope contiguously via the first sheathing layer **30**, the plywood buck **59** suitably wrapped with a weathertight tape, the window frames (**57***a* through **57***c*, depending upon the fixed or operable configuration shown), and window glass **56**, along with suitably placed taping **50** as shown.

**[0084]** In FIG. **13** there is shown a schematic cross-sectional side view showing an example of a floor to floor

gable wall marriage detail incorporating panelized wall sections in accordance with the present invention. Here, "marriage joints" allowing each panel to be air-sealed and insulated after panel installation. Again, the panel break **200** is shown to better view the separation between panelized wall sections. Here, the interface between panelized wall sections includes a set of horizontally oriented I-joists **63**, preferably formed by an 11⅞ inch I-joist arranged 24 inches on center with SPF flanges and OSB webs. Each horizontally oriented I-joist **63** perpendicularly abuts the end of each I-joist **29**.

**[0085]** With further regard to FIG. **13**, a pair of insulation boards **49** are provided within the opposing voids in each horizontally oriented I-joist **63**. It should also be noted that that second sheathing layer **11** is provided across insulation boards **49** thereby ensuring a contiguous airtight, water-repelling, vapor-open barrier to the blanket layer in either configuration. The flooring section includes web joists **37** of which the outermost one abuts the first sheathing layer **30** and rests between internal walls **34**, specifically upon top plate **65** as shown. Taping **50** is provided at the joining of each horizontally oriented I-joist **63** against the adjacent first sheathing layer **30** to provide contiguity in the airtight layer. Extending the first sheathing layer **30** above the blanket layer ends also facilitates air sealing the horizontal marriage joint at floor-to-floor wall connections.

**[0086]** At wall top plates, it is also advantageous to let in strips of air-sealing membrane to the airtight layer of each wall during wall construction, to be connected to the roof airtight layer during assembly, to complete the airtight layer. As well, holding blanket layer top plates slightly lower than the roof slope is beneficial to allow for discrepancies in construction.

**[0087]** During a typical installation like that shown in FIG. **13** where a panelized wall section is installed above another such section, typically (but not limited to) second story cave walls, the structural wall bears on top of the floor framing, but the blanket layer extends down below the top of the second floor. The second sheathing layer **11** may extend down to meet the (typically) first floor airtight layer allowing a small construction gap, and the joint is sealed with tape. The blanket layer does not extend down as far, typically leaving a 6-8" horizontal gap to be filled with cellulose on site after air sealing is complete.

**[0088]** At gable walls, the panelized wall structures in accordance with the present invention may advantageously also provide for "balloon framing" of the structural wall either to span from the bottom of the first floor to the ceiling of the second floor or alternatively extending the framing to the top of the roof slope. "Balloon framing" the entire wall assembly is also possible by running structural components and blanket layer structure the full height of the building. It is also possible to install and seal blocking in the stud bays, in line with the ceiling air barrier, to allow continuity of the air barrier between ceiling and walls.

**[0089]** While panelized wall sections have thus been described in detail with regard to several configurations within a building, it should further be noted that the present inventive concepts may also be provided to a panelized roof section. Accordingly, FIGS. **14** through **18** relate to the present invention in regard to specifics of roofing configurations. Again, like elements as previously described are shown and labeled, though not discussed again as their structure and function are as previously explained herein above.

**[0090]** With specific reference to FIG. **14**, there is shown a schematic cross-sectional view through a panelized roof section incorporating the present invention. Just as in the panelized wall section of FIG. **2** et seq., the panelized roof section also includes elements which can be grouped into five (5) basic categories which include the structural layer, the airtight layer, the blanket layer, the weather resistant barrier, and the rain screen.

**[0091]** The structural layer of the panelized roof section shown in FIG. **14** includes rafters **71** which are preferably suitable 2×10 SPF studs arranged 24-inch on center, in a commonly understood manner, ceiling strapping **64** from 1×3 SPF is arranged 16-inch on center upon which internal surfacing of gypsum sheetrock **33** or any suitable interior surfacing product for the given implementation is affixed. Within the voids between rafters **71**, there is also provided mineral wool insulation **32**. The interior framing system of rafters **71** carries all structural loads. Connection of the roof airtight layer to the wall airtight layer may be accomplished with flaps of second sheathing layer **11** that project below the rafters **71**.

**[0092]** The airtight layer provides a structural diaphragm that is also the primary air barrier and vapor retarder on the outside of the structural layer. In terms of FIG. **14**, this is provided by root sheathing **70**. The root sheathing **70** is preferably constructed of a suitable weathertight coated OSB (oriented strand board) such as ⅝-inch ZIP® sheathing and rendered airtight with all joints and nail holes taped with a suitable weatherproof taping **50** such as Tescon Vana® adhesive tape with fleece backing available from Pro Clima® or any suitable weathertight tape.

**[0093]** In terms of FIG. **14**, the blanket layer is the insulating layer located exterior to the roof sheathing **70** and which includes roofing I-joists **69** filled there between with cellulose insulation **14** or similar suitable insulating material. Each roofing I-joist **69** is preferably a 16-inch I-joist arranged 24 inches on center with SPF flanges and OSB webs. The blanket layer is structurally screwed (using structural screws) to the structural layer as shown with taping **50** provided to render any corresponding holes airtight as previously mentioned. It should be understood that sheet goods (plywood or OSB) are provided at the top and bottom of the I-joists as top and bottom plates so as to create a cavity for blown insulation. For purposes allowing air evacuation when installing blown insulation, holes may be drilled in the roofing I-joists **69** of the blanket layer and covered with air-permeable mesh. Cellulose insulation may be installed more densely than normal, at 4.0 to 4.25 pounds per cubic foot, to ensure that such insulation remains in place during transport and for the life of the building.

**[0094]** With continued reference to FIG. **14**, the weather resistant barrier is formed by the second sheathing layer **11** which, similar to its use in the panelized wall sections, is made of an airtight, water-repelling, vapor-open fabric that is resistant to outdoor weather. It is advantageous that the placement of the second sheathing layer **11** is in a protected location, above the rafters, internal to the roof assembly.

**[0095]** The panelized roof section shown in FIG. **14** also includes a rain screen which includes the outermost parts shown adjacent the exterior of the second sheathing layer **11**. Vertical roof strapping **68** is first suitably secured (e.g., via

screws not shown) over the second sheathing layer **11** and preferably formed by 1×3 SPF arranged 24" on center to abut each roofing I-Joist **69** as shown. Upon the vertical roof strapping **68** is secured horizontal roof strapping **66** preferably formed by 2×4 SPF purlins arranged 12" on center so as to create a freely draining ventilation channel. The final outer layer of roofing **67** is provided in any typical manner such as standard sheet metal rooting or as desired for the given building's exterior decor requirements. Installation of roof strapping below the air barrier may be provided in a manner thick enough to allow electrical conductors to be installed while meeting code distance for fasteners.

**[0096]** Panelized roof sections may be pre-insulated at the factory or post Insulated at the installation site. Leaving the ratter bays uninsulated, as a "service cavity," until after the building envelope is complete is beneficial so as to facilitate panel attachments, mechanical and electrical work. Panelized roof sections that are post-insulated may be provided in the form of prefabricated trusses that are installed, air sealed, and insulated on site, and may include structural support in the form of shop-fabricated roof trusses, air sealing in the form of a membrane below the trusses connected to the walls' airtight layer, and insulation blown into the resulting attic cavity.

**[0097]** FIG. **15** is a schematic cross-sectional cave view through a panelized roof section in conjunction with a panelized wall section, each incorporating the present invention. Here, the interface of the panelized roof section with the panelized wall section is configured so as to ensure that the airtight layer is contiguous and completely uninterrupted. More specifically, the end of the panelized roof section is angled to provide desired pitch of roofing **67**. It should be noted that the wall rain screen cavity is connected with the roof ventilation plane for fully ventilated cladding.

**[0098]** A roofing rimboard **73** preferably formed of 1⅛" OSB suitably wrapped with a weathertight tape. The roofing rimboard **73** abuts the first sheathing layer **30** with all joints including taping **50**. As well, the airtight layer of the panelized wall section and the airtight layer of the panelized roof section include a barrier **72** there between. The barrier **72** is preferably a high performance airtight vapor control layer such as Pro Clima® DA, Intello, or Intello Plus vapor retarder layers with all joints sealed by taping **50** preferably with Tescon Vana® or Rapid Cell® tape at all seams and staples so as to provide a continuous air barrier. In this configuration, the airtight layer is formed contiguously by the roof sheathing **70**, rimboard **73**, barrier **72**, and first sheathing layer **30**, and assured by taping **50**.

**[0099]** When there are cave overhangs, it is advantageous to hold the cave wall blanket layer top plates slightly lower than the bottom of the truss top chord so as to allow the top chord to extend over the top of the blanket layer. At cave walls and rake walls, running the blanket layer vertically beyond the structural wall top plate to meet (with a small construction gap) the roof plane may be accomplished for the beneficial purpose of over-insulating the roof framing.

**[0100]** FIG. **16** is a schematic cross-sectional view through panelized roof sections (one in dotted line not labeled) showing ridge detail and incorporating the present invention. Here, the panelized roof sections attach to a ridge beam **75** using rafter hangars **74**. The interface between panelized roof sections atop the ridge beam **75** is seen to include a gap which is filled with insulation **48** which may be in the form of water cured butyl fired urethane foam which may be injected into the corresponding space. Taping **50** over the ends of abutting roof sheathing **70** ensures a contiguous airtight layer. The interface of the blanket layers includes a vertical gap in line with the ridge beam **75** and insulation **48**, and which vertical gap is filled with cellulose insulation **14**.

**[0101]** It is advantageous where two roof panels meet to build one panel with extra second sheathing layer **11** so as to be unfurled and sealed to the adjacent panel after air sealing is complete. It is also advantageous where two roof panels meet at the ridge to leave a cavity in the blanket layer to facilitate air sealing from above and/or to build one panel with extra second sheathing layer **11** so as to be unfurled and sealed to the opposite panel after air sealing is complete.

**[0102]** FIG. **17** is similar to FIG. **15** except that FIG. **17** includes a trussed roof. It should be readily apparent that the trussed roof includes trusses **76** that may be of any suitable design configuration corresponding to the given building requirements. Here, the airtight layer is provided by way of membrane **72** secured across the bottom of the given trusses **76** with taping **50** provided at all seams and staples. Heavy ceiling strapping **77** is then attached (e.g., via screws) to trusses **76** with the membrane **72** secured there between. In this configuration, the airtight layer is formed contiguously by the membrane **72** and first sheathing layer **30**, and assured by taping **50**.

**[0103]** A 24" raised heel truss roof is typically a cost effective approach for a trussed roof design, insulated with loose-fill cellulose to a depth of 24" to 30" for U values ranging from 0.071 to 0.045 $W/m^2K$ (0.0125 to 0.008 Btu/hr $ft^2$ ° F.). ≈R 80 to 120. The truss may be shaped like a conventional gable, or it may be a mono-pitch (aka "shed roof"), low-slope (aka "flat roof"), or other shapes. The economical choice is for the truss to have a horizontal bottom chord, resulting in a conventional flat ceiling, but it may also be scissor or parallel chord trusses to create cathedral ceilings.

**[0104]** FIG. **18** is a schematic cross-sectional view through a low slope pitch roof incorporating the present invention. Such a low slope, or flat, roof may include layers having roof sheathing **78** such as ZIP System®, fiber board **79**, and EPDM (ethylene propylene diene monomer (M-class) rubber) **80** with suitable seam tape **81**, drip edge **82**, and fascia **83** which are known in the low slope roofing art to provide a suitably durable low slop roofing surface. In this configuration, a panelized roof section simply abuts to a panelized wall section and rests on top plate **65** of the internal wall **34**. In this configuration, the airtight layer is formed contiguously by the roof sheathing **70** and first sheathing layer **30**, and may also be assured by taping **50** over abutting ends so as to ensure a contiguous airtight layer.

**[0105]** The wall assembly and corresponding system is certified by the International Passive House Institute to be free of thermal bridging, with a U-wall of 0.101 $W/m^2K$ (0.017 Btu/hr $ft^2$ ° F.), ≈R 58.6. The related detailing the building's exterior corners result in negative Psi (ψ) values, meaning that not only are they free of thermal bridging, they are a net gain when performing heat loss calculations. The present invention has a ψ at building exterior corners is −0.068 W/mK (−0.039 Btu/h $ft^2$ ° F.) and at building interior corners the ψ value is 0.026 W/mK (0.015 Btu/h $ft^2$ ° F.). The International Passive House Institute has also determined the panelized roof sections to perform with a U value of 0.065 $W/m^2K$ (0.011 Btu/hr $ft^2$ ° F.), ≈R 90. At the cave

connection with the exterior wall, typically a thermal bridge, the inventive roof assembly has negative thermal bridging: ψ=−0.029 W/mK. At the ridge, another potential source of problems, the marriage joint achieves ψ=−0.029 W/mK

**[0106]** As mentioned, the inventive panel assemblies (i.e., panelized wall structures and panelized roof structures) are shop-fabricated. In other words, the inventive assemblies are assembled primarily in a climate controlled facility which ensures high quality in construction and enables tight tolerances of all assembly dimensions. Panel size for each assembly is of course dictated by the given project's geometry, equipment constraints, and trucking restrictions. Following installation on site, each of the airtight layer, the blanket layer insulation, and the weather resistant barrier is completed at the marriage joints. Use of a crane may facilitate panel setting, while shipping of the panels may be provided horizontally on a trailer. It may be preferable to utilize waler boards (i.e., framing lumber attached to stakes in the ground) outside the building to brace wall panels as they are erected, as opposed to typical interior wall bracing which also advantageously protects the concrete slab from damage.

**[0107]** With further reference to FIG. **2**, it should also be noted that the foundation insulation **20**, **24** and corresponding slab **25** may provide unique innovations in the combination as shown. More specifically, a raft slab foundation that is a well-insulated, self-forming foundation system may be provided that includes EPS foam, in customizable interlocking shapes, to form the perimeter and "frost wing" (i.e., the portion which extends beyond the concrete slab). The customizable interlocking shapes may interlock with the frost wing to create a perimeter form for the concrete slab. As well, the EPS foam may be provided in simple rectangular form to create sub-slab insulation.

**[0108]** The foam components are prefabricated in a shop. Following site preparation, the foam components are set on the site, sealed together with sprayed foam, the vapor barrier is installed, concrete reinforcing is installed, and the concrete slab is poured into the EPS foam "raft." At a nominal 8", the concrete slab is thick enough that additional structural support in the form of footings is not typically required. Moreover, the foam insulation protects the slab from thermal losses. Such innovative raft slab foundations may beneficially provide features including the use of borate-treated EPS foam for all components and the use of different densities of EPS for different locations.

**[0109]** The shape of a "frost wing" portion of such a raft slab system may involve including a wing projecting beyond the building with a groove which receives the slab form and sloped to shed water. The shape of the "slab form," L-shaped in section, which interlocks with the frost wing advantageously creates an 8" tall form for the concrete slab. The raft slab system may feature: infilling the frost wing perimeter with rectangular blocks of borate-treated EPS foam; specific dimensioning of all parts; using component dimensions adequate to meet the Passive House standard in cold climates; having all parts cut to shape and length, including mitered wings at inside and outside corners; leaving gaps between all components, pending application of spray foam adhesive sealant; using spray foam adhesive sealant to connect all components; using blocks of foam offcuts to support steel reinforcing before the concrete slab is poured; following the concrete pour, wrapping the vapor barrier membrane onto the top surface of the concrete and sealing it with tape so as to be later connected with the wall air barrier; and backfilling over the frost wing with soil for protection and aesthetic reasons.

**[0110]** Still further, assemblies in accordance with the present invention may form a pier foundation that minimizes or eliminates the use of plastic foam and concrete, as both products have certain negative environmental impacts. A pier foundation utilizing helical metal piles or other forms of support, depending on various conditions, sized per building code and industry best practices may therefore benefit from the present panelized wall and roof structures. Above the piers, panelizing construction of the floor system may be provided in accordance with the same principles and features shown and described herein above with regard to the inventive panelized wall and roof structures.

**[0111]** As mentioned, for projects where treading lightly on the land is a key concern, eliminating plastic foam is a goal, or access to the site is compromised, a pier foundation may be used. Using helical piers—galvanized metal posts with an auger screw at the bottom, literally drilled into the ground—minimizes disturbance of the site. The floor is framed with deep I-joists and filled with dense-packed cellulose, with an airtight, moisture-repelling skin applied to the bottom of the floor system. A small, insulated chase may be used to bring utilities into a central location. The same insulated floor system used for piers may be used on an uninsulated foundation or crawlspace. The present invention utilized with a foam-free framed floor system uses 24" I-joists filled with dense-packed cellulose, with assembly insulation values of 0.070 $W/m^2K$ (0.012 Btu/hr $ft^2$ ° F.), ≈R 83.3.

**[0112]** It should be readily understood that the present invention advantageously allows in-shop fabrication of building components and assemblies thus ensuring quality control and fast, accurate installation on site. As well, this allows for configuring building components and assemblies for ease of loading and trucking flat (horizontally) on a flatbed trailer. Such in-shop fabrication of building components and assemblies thereby enable building envelope performance much greater than that provided by standard construction techniques.

**[0113]** The above-described embodiments of the present invention are intended to be examples only. Alterations, modifications and variations may be effected to the particular embodiments by those of skill in the art without departing from the scope of the invention, which is defined solely by the claims appended hereto.

What is claimed is:

**1**. A system for constructing an energy efficient building, said system comprising:

at least one panelized structure having

a structural layer including a first set of voids and located at an inner area of said at least one panelized structure, said inner area being adjacent to intended living space of said energy efficient building,

an airtight layer formed by a first sheathing layer providing a primary air barrier and a vapor retarder exterior to said structural layer,

a blanket layer located exterior to said first sheathing layer and formed by a plurality of vertical members with a second set of voids located between each of said vertical members,

a weather resistant barrier located exterior to said blanket layer and including a second sheathing layer formed by an airtight, water-repelling, vapor-open fabric,

a rain screen located exterior to said weather resistant barrier, said rain screen being adjacent to outdoor space external to said energy efficient building and including a drainage plane internal thereto, said drainage plane for channeling moisture away from said weather resistant barrier;

insulation for placement within said structural layer and said blanket layer; and

wherein said at least one panelized structure is air-sealed and insulated within said first and second sets of voids after installation.

**2**. The system as claimed in claim **1** wherein at least a first panelized structure and a second panelized structure are provided and include a marriage joint therebetween, said marriage joint configured to provide continuity of said first sheathing layer between said first panelized structure and said second panelized structure and continuity of said second sheathing layer between said first panelized structure and said second panelized structure.

**3**. The system as claimed in claim **2** wherein said first panelized structure is a wall panel and said second panelized structure is a roof panel.

**4**. The system as claimed in claim **3** wherein said second panelized structure forms a pitched roof of said energy efficient building.

**5**. The system as claimed in claim **3** wherein said second panelized structure forms a flat roof of said energy efficient building.

**6**. The system as claimed in claim **2** wherein said first panelized structure and said second panelized structure are both wall panels.

**7**. The system as claimed in claim **6** wherein said wall panels form a contiguous straight section of wall.

**8**. The system as claimed in claim **6** wherein said wall panels are arranged at a right angle to one another and form an interior corner section of wall.

**9**. The system as claimed in claim **6** wherein said wall panels are arranged at a right angle to one another and form an exterior corner section of wall.

**10**. The system as claimed in claim **2** wherein said blanket layer is attached to said structural layer via structural screws.

**11**. The system as claimed in claim **10** wherein said airtight layer is retained in place between said blanket layer and said structural layer via said structural screws.

**12**. A panelized wall structure for constructing an energy efficient building, said panelized wall structure comprising:

a structural layer having a first set of voids and located at an inner area of said panelized wall structure, said inner area being adjacent to intended living space of said energy efficient building;

an airtight layer formed by a first sheathing layer providing a primary air barrier and a vapor retarder exterior to said structural layer;

a blanket layer located exterior to said first sheathing layer and formed by a plurality of vertical members with a second set of voids located between each of said vertical members;

a weather resistant barrier located exterior to said blanket layer and including a second sheathing layer formed by an airtight, water-repelling, vapor-open fabric; and

a rain screen located exterior to said weather resistant barrier, said rain screen being adjacent to outdoor space external to said energy efficient building and including a drainage plane internal thereto, said drainage plane for channeling moisture away from said weather resistant barrier.

**13**. The panelized wall structure as claimed in claim **12** further including insulation located within said first and second set of voids.

**14**. The panelized wall structure as claimed in claim **13** further including a marriage joint configured to provide continuity of said first sheathing layer between said panelized wall structure and another first sheathing layer of another panelized wall structure and continuity of said second sheathing layer between said panelized wall structure and another second sheathing layer of another panelized wall structure.

**15**. The panelized wall structure as claimed in claim **13** wherein said blanket layer is attached to said structural layer via structural screws.

**16**. The panelized wall structure as claimed in claim **13** wherein said airtight layer is retained in place between said blanket layer and said structural layer via said structural screws.

**17**. A panelized roof structure for constructing an energy efficient building, said panelized roof structure for constructing an energy efficient building, said panelized roof structure comprising:

a structural layer having a first set of voids and located at an inner area of said panelized roof structure, said inner area being adjacent to intended living space of said energy efficient building;

an airtight layer formed by a first sheathing layer providing a primary air barrier and a vapor retarder exterior to said structural layer;

a blanket layer located exterior to said first sheathing layer and formed by a plurality of vertical members with a second set of voids located between each of said vertical members;

a weather resistant barrier located exterior to said blanket layer and including a second sheathing layer formed by an airtight, water-repelling, vapor-open fabric; and

a rain screen located exterior to said weather resistant barrier, said rain screen being adjacent to outdoor space external to said energy efficient building and including a drainage plane internal thereto, said drainage plane for channeling moisture away from said weather resistant barrier.

**18**. The panelized roof structure as claimed in claim **17** further including insulation located within said first and second set of voids.

**19**. The panelized roof structure as claimed in claim **18** further including a marriage joint configured to provide continuity of said first sheathing layer between said panelized roof structure and a corresponding first sheathing layer of a panelized wall structure and continuity of said second sheathing layer between said panelized roof structure and a corresponding second sheathing layer of a panelized wall structure.

**20**. The panelized roof structure as claimed in claim **18** wherein said blanket layer is attached to said structural layer

via structural screws, and said airtight layer is retained in place between said blanket layer and said structural layer via said structural screws.

* * * * *