Feb. 11, 1930. T. E. MORIN 1,746,863

PUMP SUPPORTING MEANS

Filed May 4, 1929 3 Sheets-Sheet 1

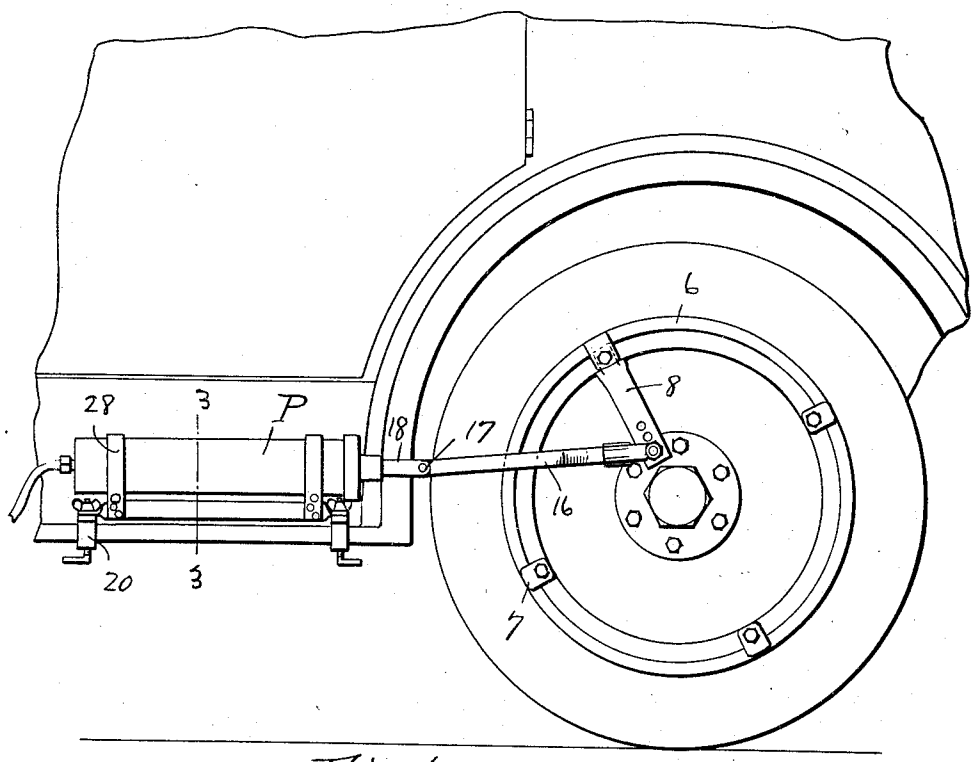

Fig. 1.

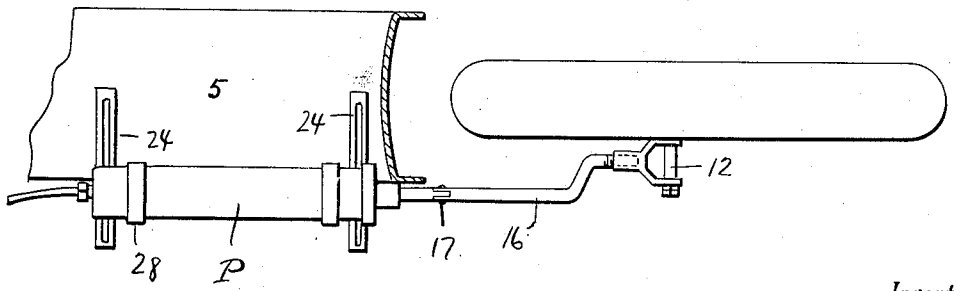

Fig. 2.

Inventor

Thomas E. Morin

By Clarence A. O'Brien

Attorney

Feb. 11, 1930. T. E. MORIN 1,746,863

PUMP SUPPORTING MEANS

Filed May 4, 1929 3 Sheets-Sheet 2

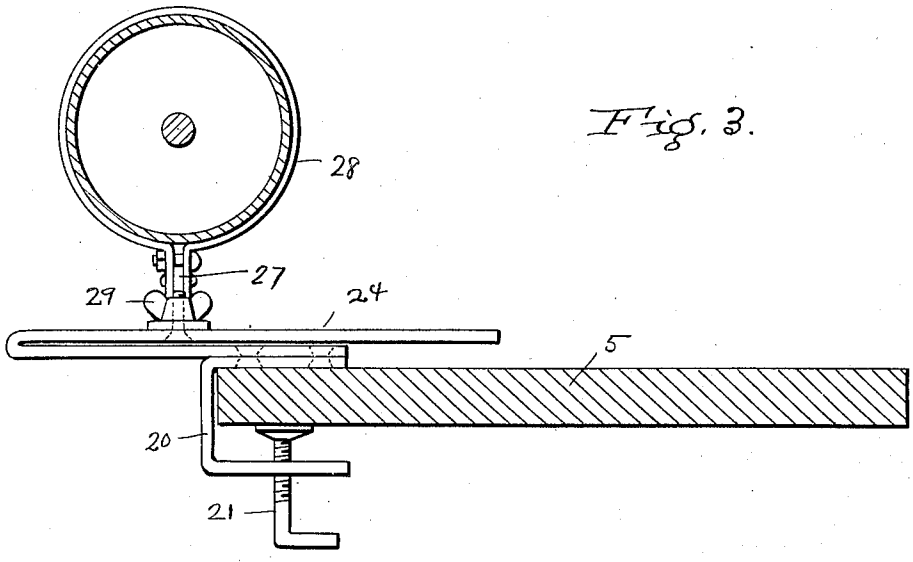

Fig. 3.

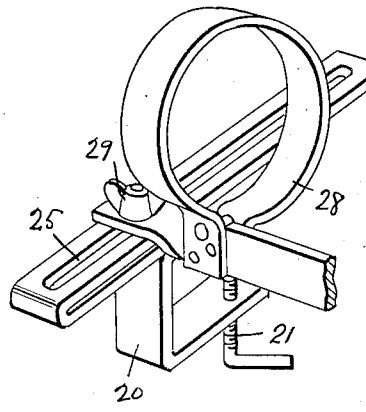

Fig. 4.

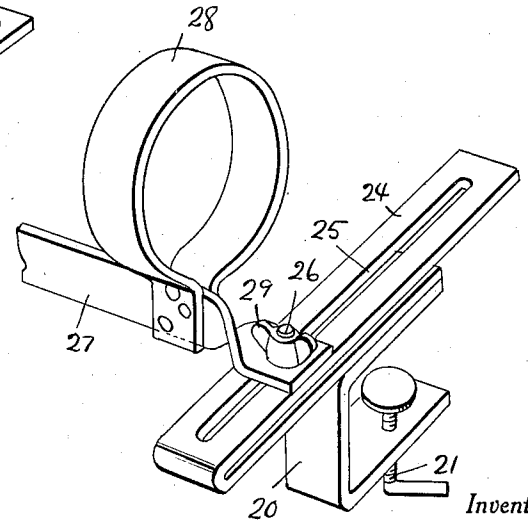

Inventor

Thomas E. Morin

By Clarence A. O'Brien

Attorney

Feb. 11, 1930. T. E. MORIN 1,746,863

PUMP SUPPORTING MEANS

Filed May 4, 1929 3 Sheets-Sheet 3

Fig. 5.

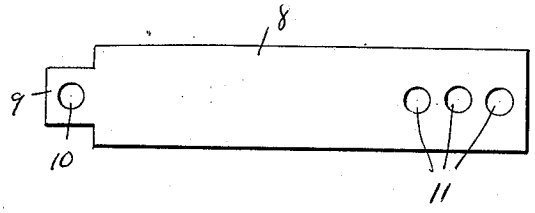

Fig. 6.

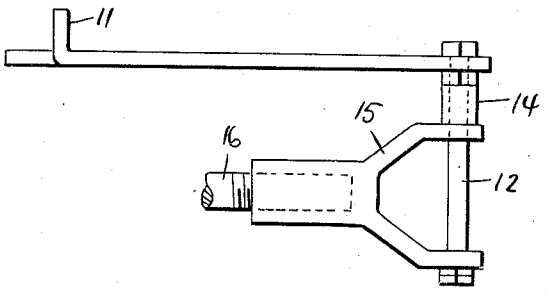

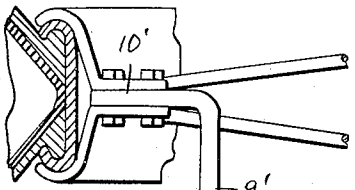

Fig. 7.

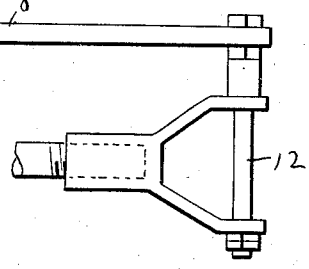

Fig. 8.

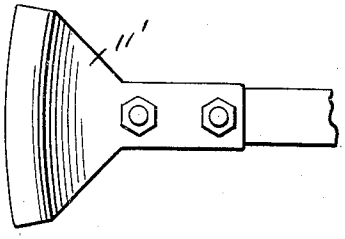

Inventor

Thomas E. Morin

By Clarence A. O'Brien

Attorney

Patented Feb. 11, 1930 1,746,863

UNITED STATES PATENT OFFICE

THOMAS EDWARD MORIN, OF BURKE, NEW YORK

PUMP-SUPPORTING MEANS

Application filed May 4, 1929. Serial No. 360,474.

The present invention relates to means for operating a pump particularly an air pump, and has for its prime object to provide a structure whereby the pump may be operated from a wheel of an automobile.

Another very important object of the invention resides in the provision of means for mounting an air pump on the running board of an automobile in combination with means for actuating or reciprocating the pump from the rear wheel of an automobile.

A further very important object of the invention resides in the provision of a mechanism of this nature which is simple in its construction, inexpensive to manufacture, strong and durable, thoroughly efficient and reliable in use, easy to install, and otherwise well adapted to the purpose for which it is designed.

With the above and numerous other objects in view as will appear as the description proceeds, the invention resides in certain novel features of construction, and in the combination and arrangement of parts as will be hereinafter more fully described and claimed.

In the drawing:

Figure 1 is a fragmentary side elevation of the rear portion of an automobile showing my mechanism associated therewith,

Figure 2 is a fragmentary top plan view thereof,

Figure 3 is a vertical transverse section through the running board and the pump taken substantially on the line 3—3 of Figure 1,

Figure 4 is a perspective view of the pump supporting apparatus,

Figure 5 is a plan view of the oblong plate for attachment to the wheel to provide a crank,

Figure 6 is an edge view thereof with the member engaged therewith,

Figure 7 is a similar view of a modified form of the structure, and

Figure 8 is another detail view thereof.

Referring to the drawing in detail and first particularly to Figures 1 to 6 inclusive it will be seen that numeral 5 denotes a running board of an automobile, numeral 6 the rear wheel thereof provided with usual lugs 7 one of which is replaced by a crank arm 8 which has a relatively narrow end extension 9 with an opening 10 to receive the lug bolt and adjacent this end 9 are lateral extensions 11 to extend within the felly of the wheel to prevent swinging of the plate.

This crank arm 8 extends radially and inwardly of the felly of the wheel terminating adjacent the hub portion thereof, and said inner end is provided with a series of openings 11 with any one of which may be engaged a bolt 12 having a scraper sleeve 14 mounted thereon and having the extremities of a fork 15 mounted thereon in which is threadably engaged one end of a connecting rod 16 pivotally engaged as at 17 with the piston rod 18 of a pump P preferably of the air type.

This pump P is mounted on the running board by an apparatus which will be described in detail hereinafter and operated by jacking up the rear wheel, preferably the left rear wheel, and causing it to be rotated by the motive power of the automobile.

The apparatus for mounting the pump P comprises a pair of U-shaped clamp brackets 20 straddling the outer edge of the running board and fastened thereto by set screws 21. U-shaped spring brackets 24 have legs secured to the upper portions of the clamp 20 and their other legs provided with elongated slots 25 to receive bolts 26 which pass through the twisted extremities of a bar 27.

Loops or bands 28 disposed about the pump have their extremities straddling and secured to the bar 27 adjacent the ends thereof. Nuts 29 on the bolts 26 allow adjustment of the bar 27 along the spring bracket 24 as may be desirable to clear the rear fender as illustrated to advantage in Figure 2 of the drawings.

When the connecting rod is disengaged from the piston rod, of course, the nuts 29 may be loosened and the pump with the bands 28 and the bar 27 slid inwardly toward the body out of the way and then the nuts may be tightened to hold the pump in this position.

In Figures 7 and 8 I have shown a plate

8′ to take the place of the crank arm 8 where wire wheels are used on the automobile. This plate 8′ has an inwardly directed lateral extension 9′ terminating in a terminal 10′ to which are fastened jaws 11′ for engaging the rim of the wheel.

It is thought that the construction, utility and advantages of this invention will now be quite apparent to those skilled in this art without a more detailed description thereof.

The present embodiments of the invention have been disclosed in considerable detail merely for the purposes of exemplification since in actual practice they attain the features of advantage enumerated as desirable in the statement of the invention and the above description.

It will be apparent that changes in the details of construction, and in the combination and arrangement of parts may be resorted to without departing from the spirit or scope of the invention as hereinafter claimed or sacrificing any of its advantages.

Having thus described my invention, what I claim as new is:

1. In a tire inflating apparatus, a pump, means for securing said pump at the side of a running board, said means comprising a pair of U-shaped clamps adapted to straddle the outer edge of the running board, means for securing said clamp to the running board, spring U-shaped brackets on the clamp having upper legs longitudinally slotted, bolts in said slots, a bar having twisted ends through which said bolts extend, nuts on said bolts, a pair of bands for receiving the pump and having extremities straddling and secured to the end portions of the bar.

2. In a tire inflating apparatus, a pump, means for securing said pump at the side of a running board, said means comprising a pair of spacedly disposed U-shaped clamps, a U-shaped spring bracket on each of said clamps having a longitudinal slot therein, a bar, means connecting said bar to said U-shaped spring bracket, a pair of bands adapted to straddle the cylinder portion of the pump having their extremities connected to said bar.

In testimony whereof I affix my signature.

THOMAS EDWARD MORIN.