April 5, 1927. 1,623,605

U. C. TAINTON

PUMP

Filed Aug. 20, 1924

Fig. 1.

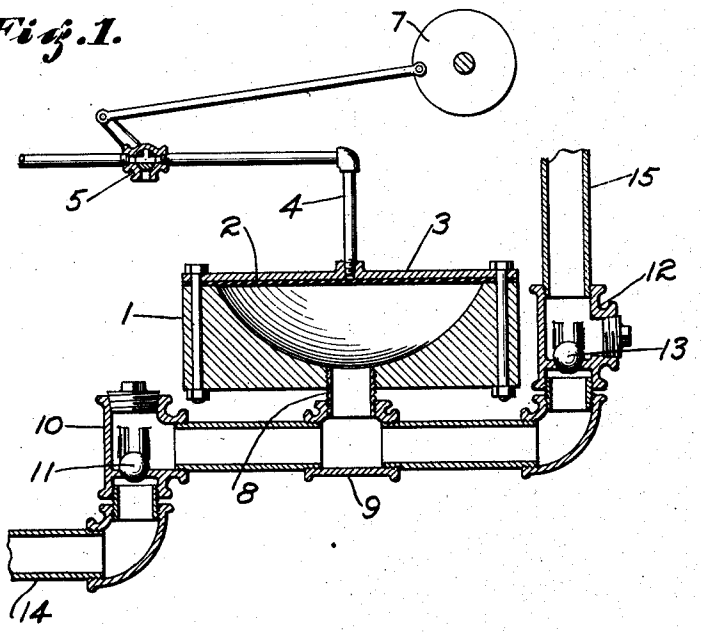

Fig. 2.

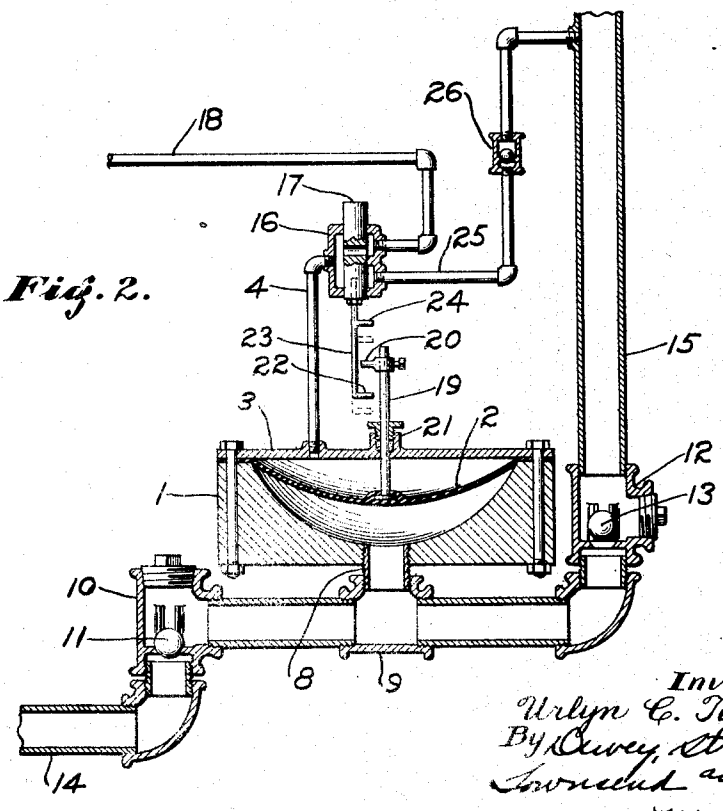

Inventor.
Urlyn C. Tainton.
By Dewey, Strong, Townsend and Loftus
Attorneys.

Patented Apr. 5, 1927. 1,623,605

UNITED STATES PATENT OFFICE.

URLYN C. TAINTON, OF JOHANNESBURG, TRANSVAAL, SOUTH AFRICA.

PUMP.

Application filed August 20, 1924. Serial No. 733,122.

This invention relates to improvements in the pumping of liquids, or mixtures of solids and liquids, and is especially applicable to the pumping of liquids which exert a corrosive action on metals. It also aims at the production of a pump which is exceptionally rugged, simple and cheap to operate and manufacture.

The essential feature of the pump consists of an elastic flexible membrane or diaphragm, which is moved back and forth by means of a varying pressure of air. This diaphragm serves to divide a vessel or chamber in the pump into two parts and by the movement of the diaphragm the liquid to be pumped is alternately drawn into and expelled from one part of the chamber. By the use of suitable valves, the liquid can then be elevated, as in the ordinary type of piston force pump.

It has been common practice hitherto to employ a diaphragm which is given a reciprocating motion by means of a crank or eccentric and a piston rod attached to the diaphragm. This type of pump is used for short lifts, such as pumping out manholes in street drainage systems. This type of pump, however, is unsuited for high lifts on account of the strain on the diaphragm, and the consequent danger of breaking it. It is moreover very difficult to adapt this pump for the handling of highly corrosive liquids, and it is also relatively expensive to manufacture.

The pump herewith described, however, has proved very satisfactory for the elevation of corrosive and gritty solutions to considerable heights. It is further very cheap to manufacture and requires a minimum of attendance and repairs.

The varying air pressure which actuates the diaphragm of the pump may be conveniently obtained from a compressed air supply which is applied at regular intervals to the diaphragm of the pump by means of a three-way valve which is caused to open and close by suitable mechanism.

An example of a simple type of this pump is shown in the accompanying drawings, in which—

Fig. 1 is a central vertical longitudinal section showing one form of the invention.

Fig. 2 is a similar section showing a modified form of the invention.

Referring to the drawings in detail, and particularly to Fig. 1, 1 indicates a bowl made from material, such as hard rubber, reinforced concrete, or multiple ply veneer wood made up with waterproof glue. The latter material after suitable impregnation is very satisfactory. Over the top of the bowl is placed first a sheet of rubber 2, and then an iron plate 3, which is bolted down to the bowl. Through the plate passes an air pipe 4, which is connected with a source of compressed air supply not here shown, and has included in the circuit a three-way cock 5. This cock is actuated by suitable mechanism, such as a link and a crank 7, so that the compressed air is alternately admitted to the space between the diaphragm and the plate, and allowed to escape therefrom. This results in a pulsating movement of the diaphragm.

In the bottom of the bowl is screwed a hard rubber pipe 8 which communicates through a T 9 with two valve boxes 10 and 12 having ball-valves 11 and 13 so placed that the incoming solution can flow only towards the bowl while the outgoing solution can flow only away from it. As the diaphragm pulsates, therefore, the solution is drawn into the bowl from the intake 14 and expelled up the outlet pipe 15. By a proper adjustment of air pressure and stiffness of diaphragm any desired lift (or suction, up to say 25 feet of water) can be obtained.

Instead of allowing the compressed air in the bowl to exhaust directly into the atmosphere at the end of the discharge stroke, part or all of this air may be passed into the outlet pipe beyond the check valve. This air brings about a lifting action (as in an ordinary air-lift) and in this way the energy of the exhaust air may be utilized and greater efficiency obtained.

If desired, the three-way cock operated by independent mechanism may be replaced by a valve which is actuated by the reciprocating movement of the pump diaphragm itself.

Both of these devices are shown in Fig. 2. In this drawing the numbers 1, 2, 3, 4 and 8 to 15 inclusive represent the same parts as in Fig. 1. In place of the three-way cock however, the air inlet pipe 4 is connected to a slide valve of which 16 represents the box and 17 the moving element or valve plug. This plug has a limited degree of vertical movement so adjusted that at the one end of the stroke the slot through its center connects from the compressed air line 18 through to the air inlet pipe of the pump.

In the drawing the pump is supposed to be in action and a discharge stroke is in progress. The compressed air is entering the chamber and the diaphragm is moving downward and expelling the liquid. Attached to the diaphragm is a metal rod 19 having a short arm 20 at its upper end and passing through a stuffing box or gland 21 screwed into the iron cover plate 3. As the diaphragm reaches the end of the stroke the arm 20 engages the stop 22 on the rod 23, which is attached to the valve plug 17. The valve plug is thus pulled down and the center slot moves until it connects the air pipe 4 from the pump with the exhaust pipe 25. The compressed air in the bowl therefore escapes along the exhaust pipe 25 which connects with the discharge line 15 of the pump. A small check valve 26 is inserted in this line to prevent the passage of liquid back along it during the intake stroke. The compressed air entering the discharge pipe elevates a further quantity of solution or may be used to raise the liquid to a greater height.

As the air escapes the diaphragm moves upward and as it approaches the top of the stroke the arm 20 engages with the stop 24 and raises the valve plug until the air line 4 to the pump is again connected to the compressed air supply 18. The diaphragm then descends and the cycle is repeated.

It is understood that the idea here described lends itself to a great many different designs and that I do not limit myself to the specific forms here shown. For example, two or three of the pump chambers may be connected to a single intake and discharge line and a steady flow of solution thus secured, as in the case of a plunger pump having a plurality of cylinders.

Various types of valves, bowle, etc., may be used and the diaphragm may be made of any flexible material. Concentrically corrugated sheet metal may with advantage be used for the latter purpose.

Having thus described my invention, what I claim and desire to secure by Letters Patent is—

1. A pump of the character described comprising a casing having a semi-spherical chamber formed therein, and a combination inlet and discharge opening in communication therewith, a flat plate forming a closure for the chamber, an elastic movable diaphragm normally parallel with the plate and intermediate the plate and casing and dividing the chamber into an air receiving and a pumping chamber, means connecting the air chamber with a source of air supply under pressure, and means whereby air under pressure will be alternately admitted and discharged.

2. A pump of the character described comprising a casing having a semi-spherical chamber formed therein, and a combination inlet and discharge opening in communication therewith, a flat plate forming a closure for the chamber, an elastic movable diaphragm normally parallel with the plate and intermediate the plate and casing and dividing the chamber into an air receiving and a pumping chamber, means for alternately admitting and exhausting air under pressure to impart movement to the diaphragm, a pipe centrally connected with the combination inlet and discharge opening in the casing, and a check valve at each end thereof.

3. A pump of the character described comprising a casing having a semi-spherical chamber formed therein, and a combination inlet and discharge opening in communication therewith, a flat plate forming a closure for the chamber, an elastic movable diaphragm normally parallel with the plate and intermediate the plate and casing and dividing the chamber into an air receiving and a pumping chamber, means for alternately admitting and exhausting air under pressure to impart movement to the diaphragm, a pipe centrally connected with the combination inlet and discharge opening in the casing, a check valve at each end thereof, a discharge pipe connected with one check valve. and means for directing the exhaust air into said discharge pipe.

4. A pump of the character described comprising a casing having a semi-spherical chamber formed therein, and a combination inlet and discharge opening in communication therewith, a flat plate forming a closure for the chamber, an elastic movable diaphragm normally parallel with the plate and intermediate the plate and casing and dividing the chamber into an air receiving and a pumping chamber, a pipe connecting the air chamber with a source of air supply under pressure, a valve on said pipe, a rod movable with the diaphragm and adapted to automatically actuate the valve whereby air will be alternately admitted and discharged, an inlet and a discharge pipe in communication with the combination inlet and discharge opening in the casing, check valves in said pipes to alternately admit and discharge liquid, and means for directing the discharge air into the discharge pipe.

URLYN C. TAINTON.