July 6, 1943. J. R. CLEM 2,323,517

VENDING MACHINE

Filed March 23, 1939 4 Sheets-Sheet 1

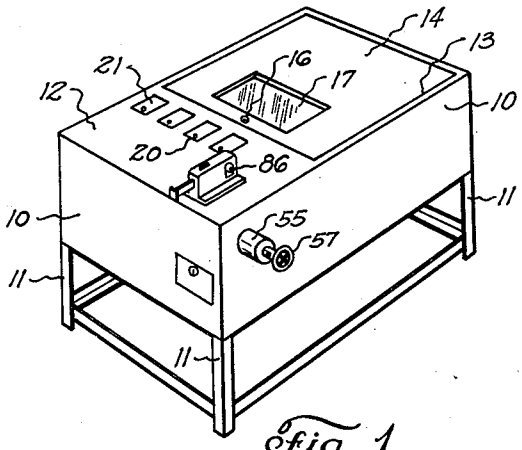

Fig. 1.

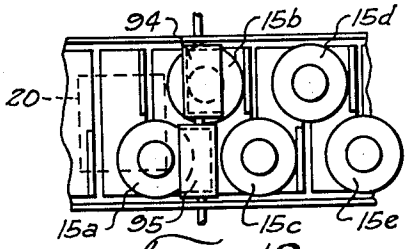

Fig. 12.

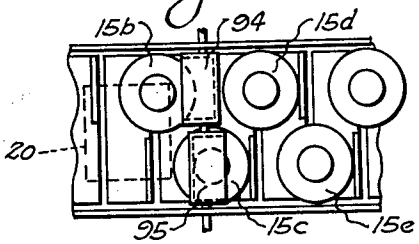

Fig. 13.

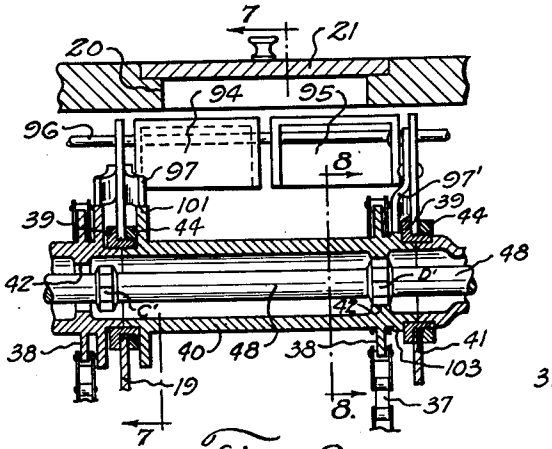

Fig. 6.

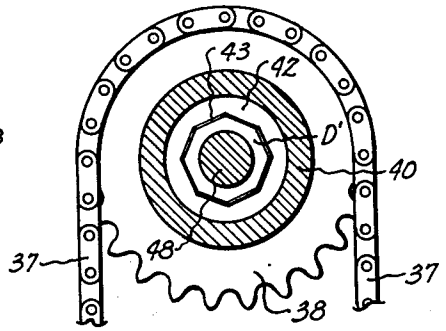

Fig. 8.

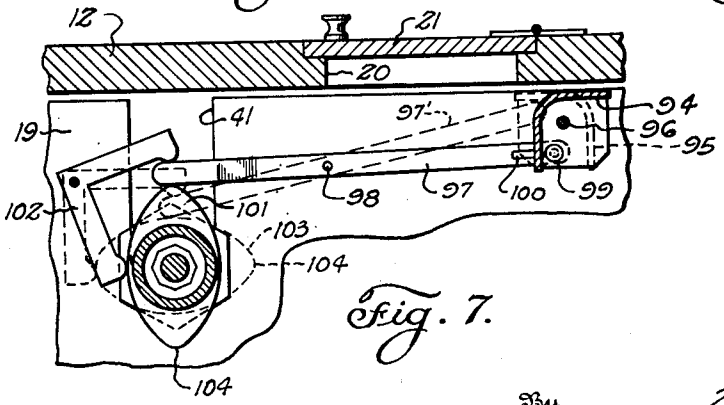

Fig. 7.

Inventor
James R. Clem.

By

Attorney

July 6, 1943. J. R. CLEM 2,323,517

VENDING MACHINE

Filed March 23, 1939 4 Sheets-Sheet 2

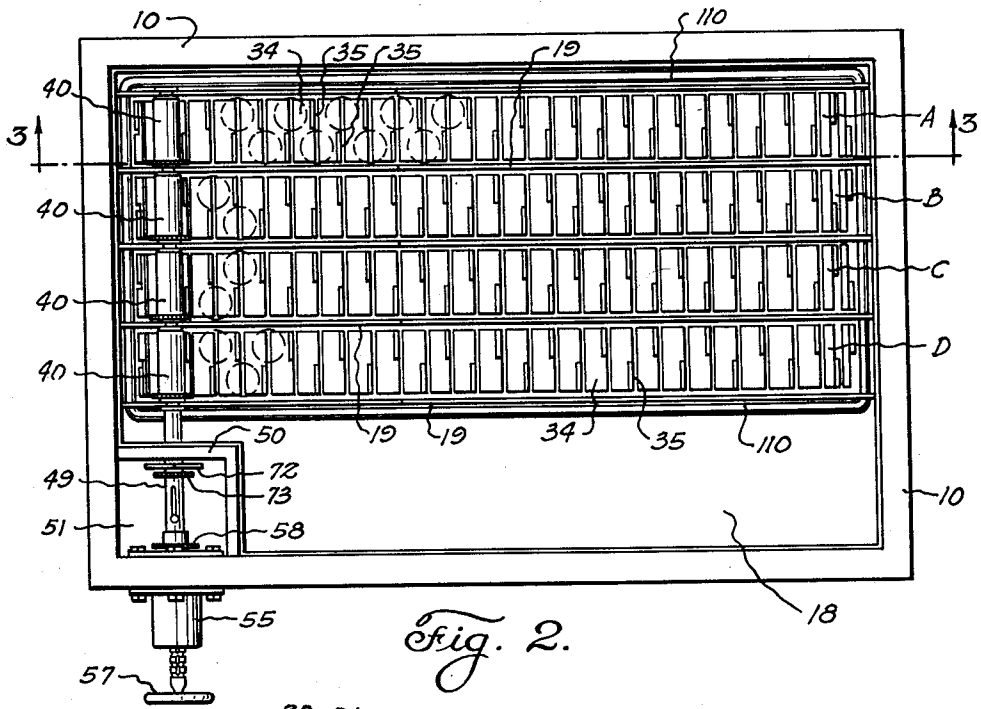

Fig. 2.

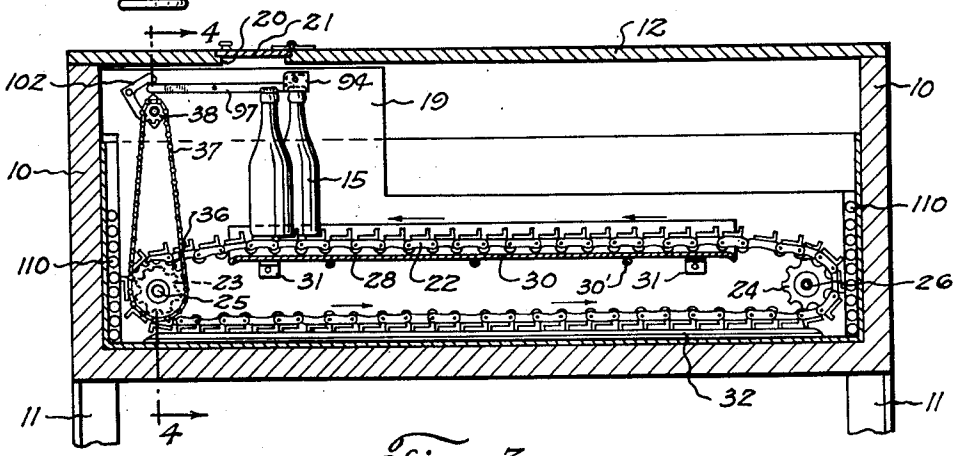

Fig. 3.

Inventor
James R. Clem.

By Jack A. Ashley

Attorney

July 6, 1943. J. R. CLEM 2,323,517

VENDING MACHINE

Filed March 23, 1939 4 Sheets-Sheet 3

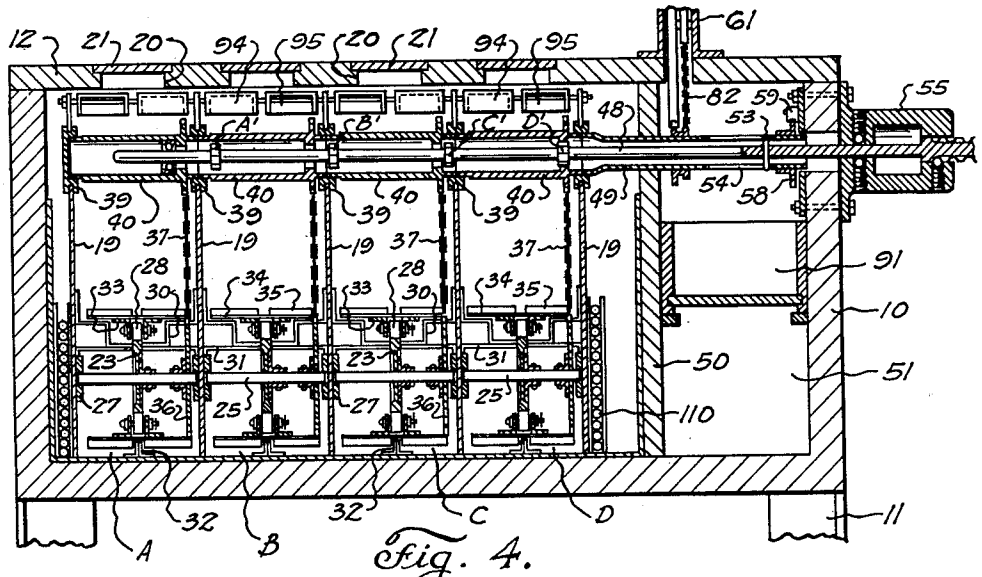

Fig. 4.

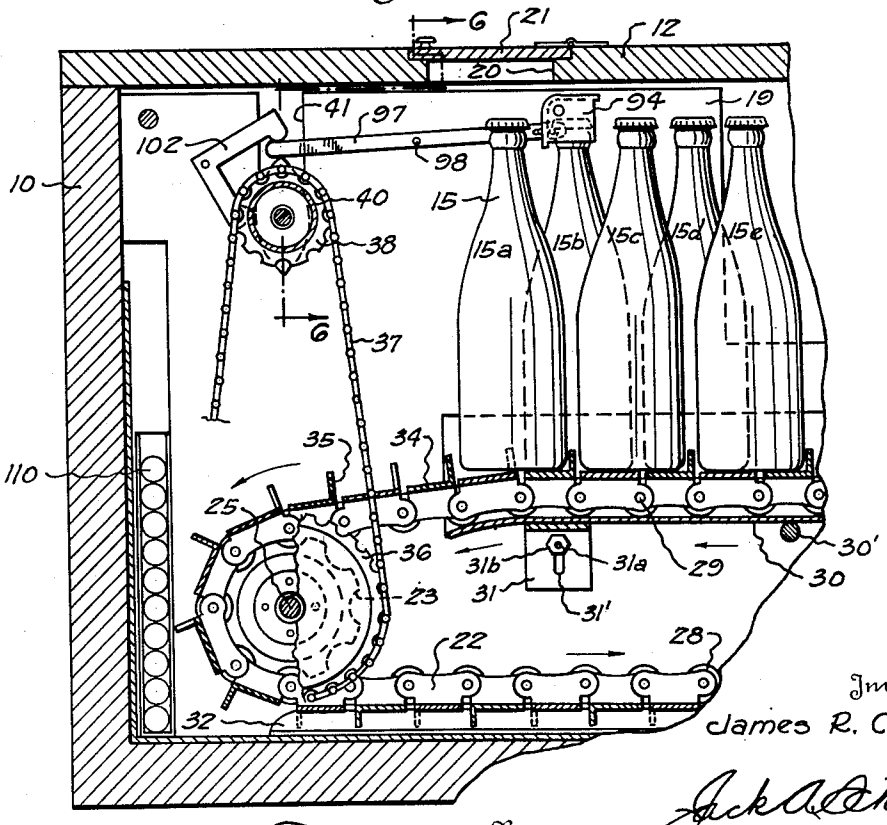

Fig. 5.

Inventor
James R. Clem.

By Jack A. Ashley

Attorney

July 6, 1943. J. R. CLEM 2,323,517

VENDING MACHINE

Filed March 23, 1939 4 Sheets-Sheet 4

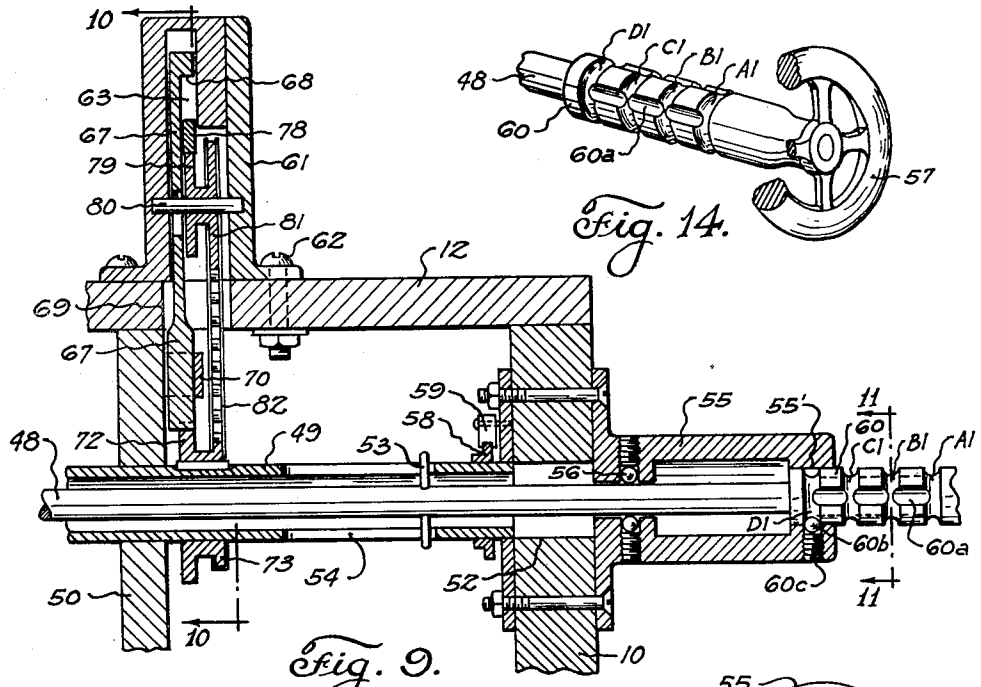

Fig. 9.

Fig. 14.

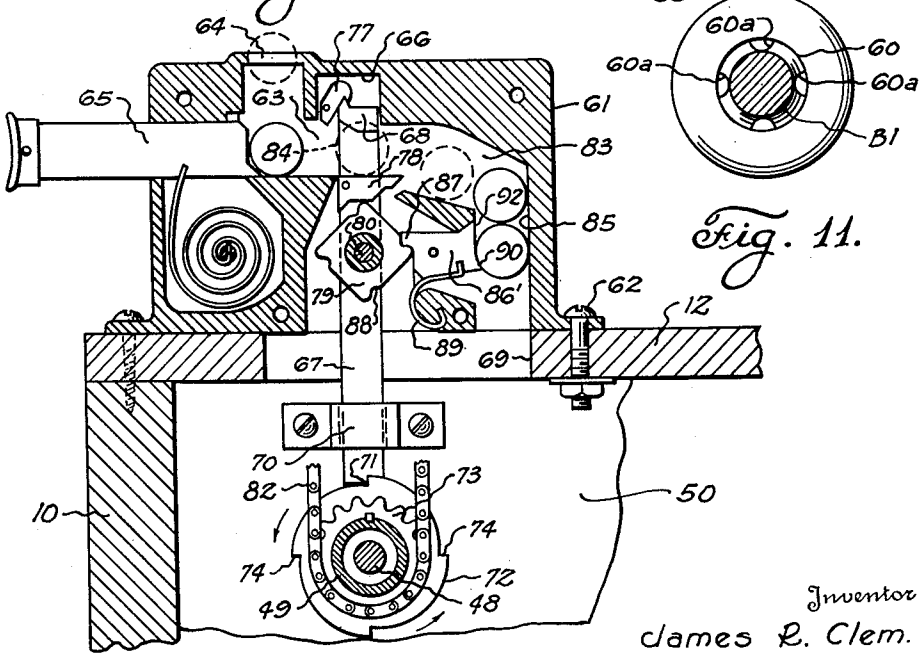

Fig. 10.

Fig. 11.

Inventor
James R. Clem.

By Jack A. Ashley

Attorney

Search Room

Patented July 6, 1943

2,323,517

UNITED STATES PATENT OFFICE

2,323,517

VENDING MACHINE

James R. Clem, Dallas, Tex.

Application March 23, 1939, Serial No. 263,630

10 Claims. (Cl. 312—36)

This invention relates to new and useful improvements in vending machines.

One object of the invention is to provide an improved machine for readily dispensing a quantity of bottled goods, such as carbonated beverages, of various flavors.

A particular object of the invention is to provide an improved vending machine which is coin-controlled and which is constructed so that bottled goods of various flavors may be stored therein, said machine having means whereby the purchaser may readily select goods of a desired flavor.

An important object of the invention is to provide an improved vending machine for bottled goods having a plurality of conveyors therein, each conveyor being adapted to receive a number of bottles, whereby when said conveyor is operated one of the bottles thereon is moved into alinement with an access opening to permit its removal from the machine; there being manually operable means for selectively actuating any desired one of the conveyors so as to move one of the bottles on the selective conveyor into position for removal from the machine.

Another object of the invention is to provide a coin-controlled, manually operated vending machine for bottles, which has therein a plurality of improved conveyors for receiving the bottles to be dispensed, each conveyor being constructed so that bottles may be arranged thereon in staggered relation to each other, whereby a maximum number of bottles may be supported on said conveyor.

A further object of the invention is to provide an improved vending machine having a plurality of conveyors therein, each of which is adapted to carry a beverage of a different flavor, the machine also having means for operating only one conveyor at a time, whereby it is impossible to operate all of said conveyors simultaneously, thereby making it possible for the purchaser to select a beverage of the desired flavor without gaining access to the bottles on the other conveyors.

Still another object of the invention is to provide a vending machine for bottled goods which is so constructed that only a single bottle can be removed at one time from each conveyor, thereby preventing removal of a number of bottles from one conveyor upon one operation of the machine.

A still further object of the invention is to provide an improved vending machine of the character described, having a manually operated lever located exteriorly of the machine for selecting and operating one of the conveyors on which the bottled goods is carried, together with an improved coin receiving mechanism which coacts with the lever in such manner that the latter is locked against operation until a coin has been inserted in the coin mechanism.

A construction designed to carry out the invention will be hereinafter described, together with other features of the invention.

The invention will be more readily understood from a reading of the following specification and by reference to the accompanying drawings, in which an example of the invention is shown, and wherein:

Figure 1 is a perspective view of a vending machine, constructed in accordance with the invention,

Figure 2 is a horizontal, cross-sectional view of the machine, illustrating the conveyors in plan and omitting the bottles so as to more clearly show said conveyors,

Figure 3 is a longitudinal, vertical, sectional view taken on the line 3—3 of Figure 2,

Figure 4 is a transverse, vertical, sectional view taken on the line 4—4 of Figure 3,

Figure 5 is an enlarged, vertical, sectional view of one end of the machine, showing the driving means for one of the conveyors,

Figure 6 is a partial, transverse, vertical, sectional view taken on the line 6—6 of Figure 5,

Figure 7 is a partial, longitudinal, sectional view taken on the line 7—7 of Figure 6,

Figure 8 is a vertical, sectional view taken on the line 8—8 of Figure 6,

Figure 9 is an enlarged view of one end of the operating shaft and showing the coin receiving mechanism in vertical section,

Figure 10 is a transverse, vertical, sectional view taken on the line 10—10 of Figure 9,

Figure 11 is a transverse, sectional view taken on the line 11—11 of Figure 9,

Figure 12 is a schematic plan view of one of the conveyors and showing the bottle retaining means, which permits removal of only one bottle at a time, in one position,

Figure 13 is a view similar to Figure 12 illustrating the bottle retaining means after it has moved to its other position to permit removal of another bottle, and

Figure 14 is a partial isometric view of the outer end of the operating shaft.

This application is filed as a continuation-in-

part of my co-pending application, Serial No. 168,339, filed October 11, 1937.

In the drawings, the numeral 10 designates a casing or housing which is illustrated as substantially rectangular in cross-section, although it may be of any desired shape. The casing is supported on suitable legs or standards 11 and has its walls preferably constructed of heat insulating material. The top 12 of the casing is formed with a large transverse opening 13 which is located nearer one end thereof and this opening is normally closed by a hinged door 14. When the door is swung upwardly, access to the interior of the casing may be had so as to permit the bottles 15 which are to be dispensed to be placed therein. The door has a suitable lock 16 for locking the same in its closed position and a glass panel 17, which is provided in said door, permits an observer to view the contents of the casing. A plurality of conveyors A, B, C and D (Figure 2) are mounted in the interior of the casing at the lower end thereof and are disposed in parallel relation to each other. The conveyors extend substantially throughout the length of the casing but do not cover the transverse width thereof so that a longitudinal chamber 18 is formed at one side of said casing. This chamber may be utilized for storage purposes, as will be explained. Four conveyors have been shown within the casing but any desired number may be employed, and a vertically disposed longitudinal partition 19 is located between adjacent conveyors, whereby each conveyor is an individual compartment or section within the casing. Each partition extends from the bottom of the casing and terminates below the top thereof (Figure 4). A plurality of outlet openings 20 are formed in the top 12 of the casing (Figures 1, 3 and 5) and each opening is in vertical alinement with one of the conveyors. A hinged door or panel 21 closes each opening and when said door is swung upwardly, the bottle immediately beneath said door on the conveyor therebelow may be removed through said openings.

Since each conveyor is separated from the other conveyors by the partition 19, it is manifest that the bottles on the other conveyors cannot be reached through the door 21 directly above any one conveyor, whereby only a single bottle on the conveyor directly below the door which is open can be removed, as will be hereinafter explained in detail.

The conveyors A, B, C and D are constructed exactly alike and it is believed that a description of one will suffice. Referring to the conveyor A (Figures 2, 3 and 5), this conveyor comprises an endless chain 22 which passes around sprockets 23 and 24 which are mounted on transverse shafts 25 and 26, located at opposite ends of the casing. The ends of the sprocket shafts are journaled in suitable bearings 27 carried by the partitions 19 on each side of the conveyor A, and when the shaft 25 is rotated in a counter-clockwise direction (Figures 3 and 5), rotation is imparted to the sprocket 23, whereby the chain is moved in the direction of the arrows in these figures.

For facilitating the longitudinal movement of the chain and also for supporting the same to prevent sagging thereof between the sprockets, said chain is provided with a plurality of rollers 28 which are journaled on the pins 29 connecting the links of the chain. The rollers ride upon the upper surface of an angular supporting plate 30 (Figure 4) which extends transversely between and has its upwardly bent ends contiguous to the partitions 19 on each side of the conveyor A. The plate terminates short of the sprockets 23 and 24 and rests on a transverse supporting bar 31 which bar has its ends secured to the partition. The remainder of the plate is supported on transverse rods 30'. The ends of each bar 31 are bent downwardly and extend contiguous to the partitions and each bent end is slotted at 31', whereby a bolt 31a may extend therethrough. The bolt receives a nut 31b and, obviously, the bolts provide a means whereby the conveyor may be raised or lowered within predetermined limits within the casing. Since the bar 31 of each conveyor is located below the door 21, it is evident that raising or lowering of said conveyor at this point permits the same to accommodate bottles of various heights. Manifestly, the rollers ride upon the upper surface of the plate and the upper portion of the chain 22 is supported and prevented from sagging between the sprockets 23 and 24. The lower portion of the chain which travels in close proximity to the bottom of the casing rides on an angular bar or track 32 which prevents it from dragging on said bottom.

Each conveyor is adapted to carry a plurality of bottles and, for this purpose, each link of the chain is formed with outwardly directed flanges 33. A transverse supporting bar or plate 34, which has a substantially rectangular shape (Figure 2), overlies and is secured to the flanges 33 of each link. Each plate is provided with an upwardly extending flange 35 which extends from the end thereof to a point short of the center of said bar or plate. The flanges 35 of adjacent plates 34 are staggered, as is clearly shown in Figure 2, whereby the flanges of every other plate are alined. This arrangement permits a bottle 15 to be placed on the conveyor between the alined flanges 35 of every other plate, which causes the bottle to be supported or rest upon the two adjacent plates. The width of each plate is sufficient to accommodate two bottles and, due to the arrangement of the flanges 35, the bottles are placed in two rows, with the bottles of one row in staggered or offset relation to the bottles of the other row. The bottles are, of course, placed on the conveyors A, B, C and D through the large opening 13 which is normally closed by the door 14. The bottles are so placed on each conveyor that no bottle is in alinement with the small outlet doors or panels 21, whereby one of the conveyors must be operated to bring a bottle into alinement with one of said doors. It is noted that only one conveyor can be actuated at one time, as will be hereinafter explained.

For operating each conveyor, so as to move the bottles carried thereby successively beneath the outlet opening 20, the sprocket shaft 25 is provided with a drive gear 36. This gear is connected through a drive chain 37 with a drive gear 38, which latter gear is preferably made integral with a rotatable hollow housing 40. The housing 40 has its ends reduced and journaled in suitable bearing collars 39 which are mounted in vertical slots 41 in the upper portion of the partitions 19 and, manifestly, when the housing 40 is rotated, the gear 38 is rotated to impart a rotation to the gear 36 through the drive chain 37. In this manner, the conveyor chain 22 is moved longitudinally through the casing. It is pointed out that one of the rotatable drive housings 40 is provided for each conveyor.

The drive housings 40 are of the same construction and one of said housings is clearly shown in Figure 6. The housing is preferably

made in one piece and has a cylindrical bore. An internal, inwardly directed collar 42 is formed integral with the housing, being disposed nearer one end thereof and this collar is provided with a central, angular bore or opening 43 (Figure 8), which has been shown as octagonal. The drive gear 38 is illustrated as alined with the internal drive collar and, as explained, the reduced ends of the housing are journaled in the bearing collars 39. As is clearly shown in Figure 6, each bearing collar projects through the opening 41 in the partition and is externally screw-threaded. Each collar is adapted to be inserted in the vertical slot 41 formed in the upper end of the partition, after which a locking ring 44 is threaded thereon and tightened against the partition. Obviously, after the collar is inserted in this manner and the ring 44 tightened against the partition, the collar is securely clamped in position within the lower end of the slot 41.

From the above, it will be manifest that the drive housings 40, one of which is provided for each conveyor, are rotatably mounted within each compartment above the conveyor. When each housing is rotated, the conveyor therebelow is also rotated through the medium of the gears 36 and 38 and the drive chain 37. It is pointed out that the provision of the slot 41 in each partition, together with the bearing collars 39 and associate rings 44, provide a simple means of mounting the drive housings 40 within the casing.

For selectively driving any one of the conveyors A, B, C or D, an elongate transverse drive shaft 48 is provided. This shaft is journaled and extends through the bores of the various drive housings 40 and has one end terminating within the drive housing above the conveyor A. The opposite end of the shaft extends through an elongate sleeve 49 which has one end secured in the bearing collar 39 of the end partition 19, and its other end extends through a vertical partition 50. The partition 50 is located at one side of the casing and forms a coin receiving chamber 51 at one end of the storage chamber 18. The opposite end of the sleeve 49 is journaled in an opening 52 in the wall of the casing 10 and the end of the shaft 48 projects from this end of the sleeve. The shaft is connected to the sleeve by a transverse pin 53 which is mounted in the shaft and which projects through elongate slots 54 in the sleeve. The shaft and sleeve are rotatable as a unit, yet said shaft may be moved longitudinally through the sleeve. The shaft 48 is provided with a plurality of angular driving elements A', B', C' and D' which are fastened on said shaft. As is clearly shown in Figure 4, each of the driving elements is associated with one of the conveyors and is located within the bore of the drive housing 40 of said conveyor. Each drive element is, in effect, a nut and is angular in shape, being adapted to fit within the angular opening 43 which is provided in the collar 42 of its drive housing 40 and, manifestly, when said member is within such opening and the shaft 48 rotated, a rotation will be imparted to the drive housing, whereby the conveyor therebelow is moved.

The drive elements or nuts A', B', C' and D' are so located on the drive shaft 48 that only one of said elements is in engagement with the opening 43 of its drive housing at one time, whereby when the shaft is rotated only one conveyor is operated. With this arrangement, it is impossible to engage more than one drive element with its respective opening and, therefore, it is possible to rotate only one drive housing and one conveyor. With the parts in the position as shown in Figure 4, the drive member D' is within the opening 43 of the collar 42 of its drive housing 40, but the other drive members A', B' and C' are out of engagement with their respective openings 43. A movement of the shaft 48 in a direction to the left in Figure 4 will disengage the member D' from its opening and engage the member C' with its opening; however, such movement is not sufficient to move either of the members A' or B' into their respective openings. Therefore, the amount of movement that the shaft 48 undergoes controls the particular drive member which is connected with its housing to drive the conveyor therebeneath.

The outer end of the drive shaft 48 is extended, and projects through a housing 55 which is bolted or otherwise fastened to the exterior of the casing 10, as is clearly shown in Figures 9 and 11. The shaft is rotatable on suitable ball bearings 56 and a hand wheel 57 is secured to the extreme outer end of the shaft to facilitate manual rotation thereof. The shaft is arranged to be rotated in one direction only and, to prevent reverse rotation, a ratchet gear or wheel 58 is secured to the sleeve 49 adjacent the inner wall of the casing 10. A pawl 59 rides on said gear and the provision of the ratchet and pawl permits the rotation of the shaft only in a direction to impart longitudinal forward movement of the conveyors through the casing 10. Therefore, the conveyors A, B, C and D can be moved only in the one direction within the casing 10.

To control the longitudinal movement of the shaft 48 so as to assure proper alinement of any one of the drive members A', B', C' or D' with their openings 43 in their respective drive housings 40, the projecting outer end of the shaft 48 is formed with an enlarged cylindrical head 60 which is movable through an axial opening 55' in the end of the housing 55. This opening has a smaller diameter than the diameter of the housing bore. A plurality of annular grooves A1, B1, C1 and D1 are formed in the exterior surface of the head and said slots are spaced from each other as is clearly shown in Figure 9. The annular grooves are connected to each other by a plurality of longitudinal grooves or recesses 60*a*. A ball 60*b* extends into the opening 55' and is retained in position by a screw 60*c* and this ball is arranged to engage within the grooves A1 to D1 and also within the longitudinal recesses 60*a*. When the groove D1 is in alinement with the ball 60*b* and the same is engaged therein, a rotation of the shaft 48 is possible but longitudinal movement thereof is prevented. In such position, the shaft 48 is in the position shown in Figure 4 with the drive member D' engaged within the opening 43 of its drive housing 40. Therefore, when the hand wheel is rotated in a counter-clockwise direction (Figures 9 and 14), a counter-clockwise rotation is imparted to the shaft 48, with the result that a similar rotation is imparted to the drive housing 40 and a movement of the conveyor D is obtained. At this time, the other three conveyors are stationary since the drive members A', B' and C' are not engaged with their respective drive housings 40. If it is desired to engage the drive member C' with its opening 43, it is only necessary to move the shaft longitudinally, such movement being permitted by the alinement of one of the longitudinal grooves with the ball 60*b*. It is noted that the shaft is rotated one quarter turn upon each operation and, therefore, each

time said shaft is operated, one of the longitudinal recesses 60a are alined with the ball. Longitudinal movement of the shaft continues until the next annular groove C1 is alined with the ball and, at this time, the drive element C' is engaged with its opening 43 in the drive housing surrounding this element. Therefore, it will be seen that the purchaser may readily select the conveyor which he desires to operate in order to move a bottle beneath its outlet opening 20.

In order to prevent the operation of the hand wheel 57 and a resultant rotation of the drive shaft until such time as a coin is inserted into the machine, a suitable coin mechanism is mounted within a housing 61 which is secured to the top of the casing 10 by suitable bolts 62. The housing 61 is split or made in two sections so as to be readily assembled in the usual manner, and is clearly shown in Figures 9 and 10. The casing is formed with a horizontal passage 63 at its upper end and one end of this passage communicates with the vertical coin inlet slot 64, whereby when a coin is inserted into the slot, the same will fall downwardly into the passage. A spring-pressed plunger 65 is slidable in the outer portion of the passage and is adapted to be pushed inwardly by the operator to force the coin laterally through the passage 63. A recess 66 is formed above the passage 63 and a vertical locking bar 67 has its upper end disposed within the recess. An angular horizontal foot or lug 68 is preferably formed integral with the locking bar 67 and this lug overhangs and extends into the upper portion of the lateral passage 63. The lower end of the locking bar extends downwardly through the casing 61 and passes through an opening 69 formed in the top of the casing 10. The extreme lower end of the locking bar is guided through a suitable bracket 70 which is secured to the wall of the partition 50. The lower end of said bar is formed with a depending lug 71 which rides on the periphery of a cam 72, which cam is made integral with a gear 73 which is keyed onto the sleeve 49 surrounding the drive shaft 48. The cam 72 is formed with four shoulders or offsets 74 and, obviously, when the lug 71 is in engagement with one of these offsets, as shown in Figure 10, the cam and gear cannot rotate. Since the gear 73 is keyed on the sleeve 49, it will be obvious that the engagement of the locking bar 67 with said cam will prevent rotation of said sleeve. The sleeve has connection with the drive shaft through the pin 53 and slot 54, and, therefore, when the locking bar is in engagement with one of the shoulders 74 on the cam 72, said cam and the gear 73 secured thereto, as well as the sleeve 49 on which said gear is keyed, and the drive shaft 48 connected to the sleeve, cannot be rotated.

As has been explained, the angular or horizontal lug 68, at the upper end of the locking bar 67, is disposed within the upper end of the horizontal passage 63 into which the coin deposited in the slot 64, falls. Thus, when the plunger 65 is moved inwardly, the coin is moved through the passage 63 and beneath the lug 68. However, prior to the coin striking the underside of the lug 68 to lift the locking bar 67, said coin strikes a pivoted latch member 77, which normally engages the upper end of the locking plunger to prevent its upward movement. When the coin strikes this pivoted latch, it swings said latch out of engagement with the plunger and then engages beneath the lug 68 to lift said plunger. When the plunger is lifted, the cam 72, gear 73 and sleeve 49 may be rotated. Since the sleeve 49 is connected with the drive shaft, it will be evident that when the locking plunger is disengaged from the shoulder 74 of the cam, said drive shaft may be rotated.

Immediately below the overhanging lug 68 of the locking bar 67 is a pivoted dog 78, which has a flat upper surface alined with the bottom of the horizontal passage 63 so as to form a continuation of this passage. This flat upper surface of the dog 78 is normally held in a horizontal plane by a substantially square cam member 79, said cam member being in the position shown in Figure 10. The square cam is mounted on a shaft 80 which extends transversely within the housing 61. This shaft is provided with a gear 81, preferably made integral therewith (Figure 9) and this gear is connected to the gear 73 by means of a drive chain 82. By observing Figure 10, it will be seen that the coin is trapped between the dog 78 and the lug 68 on the locking bar 67. This coin cannot escape from between these parts until the dog 78 is swung or inclined to permit the coin to roll into an inclined passage 83 which forms a continuation of the passage 63. Swinging of the dog 78 is accomplished when the square cam 79 is rotated and, obviously, this cam will not be rotated until the drive shaft 48, sleeve 49 and gear 73 are rotated, due to its connection with the gear 73 through the chain 82. Therefore, when a coin is inserted and falls into the passage 63, it is first moved forwardly to raise the locking bar 67. When this occurs, the coin is trapped between said bar and the pivoted dog 78. It will remain in this position as shown by the dotted lines 84 until the drive shaft 48 has been operated to move the selected conveyor within the casing 10.

As soon as said drive shaft is operated, the square cam 79 is rotated to permit the pivoted dog 78 to swing downwardly and allow the coin to roll into the inclined passage 83. From the inclined opening 83, the coin falls into a vertical slot 85 which extends vertically through the housing 61. This slot may be exposed to the view of the operator through a rectangular window 86 (Figure 1) formed in the side of the housing 61. Upon entering the vertical passage or slot 85, the coin is adapted to be caught by a retaining member 86' which is pivoted within the housing 61. The retaining member 86' is provided with a lug 87 which is adapted to be engaged by one of several recesses 88 provided on the periphery of the square cam 79. A spring 89 normally holds the lug 87 in engagement with the cam and also holds a curved projection 90 in the path of the coin falling through the passage 85. This position of the member 86' is shown in Figure 10 and a coin is shown as trapped within the vertical passage 85, whereby it is visible through the window 86. A second coin is shown resting on the first coin, as it may be desirable that two coins are retained within the passage 85.

The operation of the coin mechanism is readily understood. As has been explained, the coin inserted travels laterally through the passage 63 and lifts the locking bar 67, whereby rotation of the drive shaft 48 is permitted. As soon as the drive shaft is rotated, the sleeve 49 on said shaft rotates to impart a rotation to the square cam 79 through the chain 82 and gear 81. Rotation of the cam permits the pivoted dog 78 to be inclined, thereby permitting the coin to roll into the inclined passage 83 and abut the upper-

STRUCTURES.
36

most of the two coins which are trapped within the vertical passage 85. At the same time that the dog 78 was swung by the rotation of the square cam 79, said cam acting against the lug 87 of the retaining member 86', swung said member so as to move the curved lug 90 of said member out of the path of the passage 85, thereby permitting the lowermost coin in said passage to fall downwardly from the passage and through the opening 69 in the top of the casing and finally into a coin box 91 provided in the coin chamber 51. As the lug 90 at the lower end of the member 86' swings out of the passage 85, a second lug 92 formed at the upper end of the member 86' is swung downwardly into the path of said passage 85. This lug is swung into the passage 85 simultaneously with the retraction of the lug 90 and said lug engages beneath the uppermost of the two coins to prevent the second coin from falling into the coin box. Of course, as the cam 79 is rotated one-quarter of a turn, the parts again assume the position shown in Figure 10, whereby two coins are again trapped in the vertical passage 85. It is noted that each time the cam 79 is operated, it rotates one-quarter of a turn and this is due to the fact that the drive shaft 48 is rotated one-quarter of a turn each time the hand wheel is rotated.

The shaft cannot rotate more than one-quarter of a turn because as soon as the coin has escaped from below the lug 68 of the locking bar 67, the lower end of said bar falls onto the periphery of the cam and engages the next shoulder 74 on said cam. Since four shoulders are provided on the cam 72 and are spaced equidistant therearound, it will be manifest that one-quarter of a turn of said shaft 48 is permitted before the device is again locked against operation.

From the foregoing, it will be seen that each time the hand wheel 57 is rotated one-quarter of a turn, one of the coins previously deposited is dropped into the coin container 91. Before the device can again be operated, that is, before the shaft 48 can again be rotated another quarter of a turn, another coin must be deposited. The gear ratio between the drive housings 40 which are actuated by the drive shaft 48 and the conveyor chains 22 which are operated by said drive housings through the drive chains 37 is such that when the drive shaft is rotated one-quarter of a turn, the conveyor actuated upon such rotation of the drive shaft moves so as to move the next bottle on the conveyor below its outlet opening 20. As has been hereinbefore explained, the bottles are supported on each conveyor in staggered or offset relation, whereby the maximum number of bottles may be carried by the conveyor. Referring to Figure 5, one of the bottles 15*a* is shown immediately below the outlet opening 20, while the other bottles, on the conveyor, 15*b*, 15*c*, 15*d* and 15*e* are shown in their respective positions beyond said opening. This condition, as shown in Figure 5, will be present immediately after the device has been operated. The purchaser may then swing the door 21 open and may remove the bottle 15*a* which has just been moved below the outlet opening 20. Upon the next operation of the conveyor shown in Figure 5, the rotation of the drive shaft 48 by means of the hand wheel 57 will move the conveyor so as to move the bottle 15*b* beneath the opening 20, whereby said bottle may be removed through the opening. Therefore, upon each actuation of the drive shaft 48, the conveyor moves only a sufficient distance to move the next successive bottle below the outlet opening.

When any one door 21 is swung upwardly, the purchaser has access to the interior of the chamber and conveyor therebelow. Of course, the provision of the partitions 19 separates the various compartments and access cannot be had but to the compartment immediately below its opening 20. In removing the bottle 15*a*, which has just been purchased, the purchaser has access to the compartment wherein said bottle is located. In order to prevent the purchaser from removing the next bottle 15*b* at the same time, a pair of guard members or hoods 94 and 95 are provided. As is clearly shown in Figure 7, each hood is angular in cross-section and is pivoted on a transverse shaft 96 which extends between the partitions 19. An elongate pitman 97 is pivoted on a pin 98 on the partition and has one end connected through a pin 99 and a slot 100 with the guard hood 94. The other end of the pitman 97 rides on the periphery of a cam 101 which is preferably made integral with the drive housing 40 above the conveyor. A pivoted bell crank 102 has one arm engaging the cam, while its other arm overlies the pitman and this bell crank serves to hold said pitman in engagement with the periphery of the cam. Obviously, since the cam is secured to the drive housing 40, it is rotatable therewith. A similar pitman 97' is secured by a pin and slot to the other guard hood 95 and this pitman rides on a cam 103 which is made integral with the drive housing 40 and which is located adjacent the drive gear 38. The cams 101 and 103 are constructed in exactly the same manner except that said cams are disposed at right angles with relation to the drive shaft and housing 40. In other words, the high point 104 of the cam 101 is disposed vertically, which holds the guard hood 94 in the position shown in full lines in Figure 7. At this time, the high point 104 of the cam 103 is disposed in a horizontal plane, with the result that the outer end of the pitman 97' is swung downwardly, whereby the guard hood 95 is in the position shown in dotted lines in Figure 7.

The operation of the guard hoods 94 and 95 is clearly shown in Figures 12 and 13. In Figure 12, the guard hoods are in the position shown in Figure 5 and the bottle 15*a* is located immediately below the outlet opening 20. The bottle 15*b* is disposed below the guard hood 94, which hood is swung to the position shown in Figure 7, whereby the bottle 15*b* cannot be removed from the conveyor since its top is confined within the hood. At this time, the guard hood 95 is in an opposite position as shown in Figure 12, and such hood serves to prevent access to the third bottle 15*c*. Thus, only the bottle 15*a* can be removed.

When another coin is inserted and the conveyor is again operated, the levers or pitmans 97 and 97' are swung due to the quarter rotation of the cams 101 and 103. Such quarter rotation of the cams causes said cams to reverse their position with the result that the hood 94 assumes the position shown in dotted lines in Fig. ure 7, while the hood 95 assumes the position shown in full lines in this figure. Such positions of the hoods are clearly shown in Figure 13. Since the hood 94 was swung upwardly out of the path of the bottle 15*b*, said bottle was permitted to move to the position shown in Fig-

ure 13. However, the hood 95 was swung downwardly to enclose the upper end of the next bottle 15c, whereby said bottle could not be removed while the purchaser was removing the bottle 15b. Similarly, the swinging of the guard member 94 to the position shown in dotted lines in Figure 7 causes said hood to prevent access to the bottle 15d which, of course, has moved forward toward the outlet opening. In this manner, the hoods 94 and 95 are alternately swung to enclose and uncover the upper ends of the bottles as they move toward the opening 20. Said hoods provide a most effective means for preventing the removal of more than one bottle at a time or upon each operation of the device.

In the operation of the device, the coin mechanism is in the position shown in Figure 10 and the drive shaft 48 is locked against rotation. However, said shaft may be moved longitudinally within the sleeve 49, whereby the purchaser may select which conveyor he intends to operate. As soon as the selection is made, and a coin inserted into the coin housing 61, said coin enters the passage 63. The plunger 65 is then moved to force the coin into engagement first with the pivoted latch 77, which releases the locking bar 67, and then into engagement with the locking bar to raise the same and disengage it from the shoulder 74 on the cam 72. When this occurs, the operator may rotate the hand wheel 57 to rotate the shaft 48 in a counter-clockwise direction. The rotation of this shaft is, of course, limited to one-quarter of a turn, as has been explained.

When the shaft is rotated, the drive housing, with which said shaft has been connected by the selection made, is rotated to impart a longitudinal movement to the conveyor below said housing. At the same time that the conveyor is moved through the housing by rotation of the shaft, the cams 101 and 103 secured to the drive housing 40 are operated to operate the levers or pitmans 97 and 97'. Such swinging or operation of these pitmans manipulate the guard hoods 94 and 95, as has been explained, which permits the next bottle to move beneath the outlet opening 20. Therefore, the purchaser may remove the bottle by lifting the door above the selected conveyor which has been operated. At the same time that the shaft rotates to impart a movement to the conveyor and to swing the guard hoods 94 and 95, said shaft also actuates the coin mechanism through the medium of the gears 73 and 81 and the drive chain 82. The rotation of the shaft rotates the square cam 79 which first swings the pivoted dog 78 to permit the inserted coin to roll downwardly into the inclined passage 83. At the same time, the rotating cam 79 swings the retaining member 86' to release the lowermost coin in the vertical passage 85. As has been explained, release of the lowermost coin by the swinging of the member 86' causes the lug 92 on said member to engage the second coin within the passage 85, whereby said second coin cannot fall therefrom. As soon as one-quarter rotation of the drive shaft has been completed, the various dogs and members of the coin mechanism return to the position shown in Figure 10 and the locking bar has again re-engaged one of the shoulders 74 on the cam 72. Such engagement of the locking bar with said cam prevents a rotation of the drive shaft 48 and, therefore, the device is again locked against operation. In order to operate any one of the conveyors, it is necessary that another coin be inserted into the coin mechanism.

The casing may be cooled in any suitable manner, preferably by mechanical refrigeration. The cooling coils 110 are located within the casing and extend around the conveyors as is clearly shown in Figure 2. If desired, the coils could be eliminated and the chamber 18 utilized as an ice receiving chamber. Ordinarily, said chamber is employed for storing additional bottles to cool them so they will be ready at all times to be placed on the conveyor.

From the above, it will be seen that a simple and effective vending machine for bottled goods is provided. The device is entirely automatic in its operation and a selection may be readily made. This makes it possible to dispense bottled goods of various flavors without the attention of an attendant. The purchaser makes his own selection, inserts the coin, and rotates the hand wheel one-quarter of a turn. He then lifts the door 21 above the conveyor which he has selectively operated and removes the bottle which he has purchased. There is no possibility of removing more than one bottle upon each operation of the device. It is noted that although the coin mechanism is shown as mounted on top of the casing 10, it could be mounted at one side thereof adjacent the housing 55.

The foregoing description of the invention is explanatory thereof and various changes in the size, shape and materials, as well as in the details of the illustrated construction, may be made, within the scope of the appended claims, without departing from the spirit of the invention.

What I claim and desire to secure by Letters Patent is:

1. A vending machine including, a casing, a plurality of endless conveyors mounted within the casing for receiving the goods to be dispensed and movable through a horizontal plane, individual operating means for each conveyor including an annular drive sprocket, all of the drive sprockets being alined in the casing, a rotatable shaft movable through said sprockets and having means thereon adapted to engage within the sprockets to connect the shaft to said sprockets, and means enabling selectively connecting the desired sprocket with said shaft to actuate the desired conveyor.

2. A vending machine including, a casing, a plurality of conveyors mounted within the casing for receiving bottled goods to be dispensed, partitions within the casing separating the conveyors whereby each conveyor is within an individual compartment, the casing having openings therein alined with the conveyor, whereby bottles carried by said conveyor may be moved therebeneath to permit removal from the casing, an individual drive means for each conveyor, a single rotatable operating shaft movable through the individual drive means to selectively engage and operate the same, a door closing each opening, and means actuated by said drive means of each conveyor for preventing removal of more than a single bottle from the selected conveyor.

3. A vending machine including, a casing, a plurality of endless conveyors mounted within the casing for receiving the goods to be dispensed, individual operating means for each conveyor, a common actuator extending through the operating means and manually operable from the exterior of the casing for selectively actuating the same, and means for adjusting

SEARCH ROOM
STRUCTURES.
36

each conveyor to accommodate bottles of various heights.

4. A vending machine including, a casing, a plurality of conveyors mounted within the casing for receiving bottled goods to be dispensed, the casing having openings therein alined with the conveyors whereby the bottles carried by the conveyors may be moved therebeneath so that said bottles may be removed from the casing, individual drive means for each conveyor including an annular rotatable drive gear, a common actuating shaft movable longitudinally through the gears and having individual means thereon arranged to be selectively connected to the drive means so as to actuate the selected conveyor, guard members disposed above the conveyors adjacent the openings of the casing for preventing the unauthorized removal of the bottles, and means associated with each drive means and each guard member actuated simultaneously with said drive means for releasing the respective guard member of the selected conveyor.

5. A vending machine including, a casing, a plurality of conveyors mounted within the casing for receiving bottled goods to be dispensed, the casing having openings therein alined with the conveyors whereby the bottles carried by the conveyors may be moved therebeneath so that said bottles may be removed from the casing, individual operating means for each conveyor, and a common actuating shaft movable through the individual operating means and having individual means for engaging said individual operating means, whereby the individual operating means may be selectively actuated by moving the shaft to selectively engage its individual means with said individual operating means.

6. A vending machine including, a casing, a plurality of conveyors mounted within the casing for receiving bottled goods to be dispensed, the casing having openings therein alined with the conveyors whereby the bottles carried by the conveyors may be moved therebeneath so that said bottles may be removed from the casing, individual operating means for each conveyor, a common actuating shaft movable through the individual operating means and having individual means for engaging said individual operating means, whereby the individual operating means may be selectively actuated by moving the shaft to selectively engage its individual means with said individual operating means, and means for limiting the operation of said actuating shaft so as to limit the movement of the selected conveyor, whereby only a single bottle may move into position for removal beneath the opening alined therewith upon each operation of the shaft.

7. A vending machine including, a casing, a plurality of conveyors mounted within the casing for receiving bottled goods to be dispensed, partitions within the casing separating the conveyors whereby each conveyor is within an individual compartment, the casing having openings therein alined with the conveyors, whereby bottles carried by said conveyors may be moved therebeneath to permit removal from the casing, an individual drive means for each conveyor, and a single rotatable operating shaft movable within the casing and through the individual operating means, the shaft having individual means for engaging each drive means, whereby said drive means may be selectively actuated.

8. A vending machine including, a casing, a plurality of endless conveyors mounted within the casing for receiving the goods to be dispensed, each conveyor having a part thereof movable through a horizontal plane, individual drive means for each conveyor including a rotatable drive gear, a single common actuator movable longitudinally through each drive gear and having individual means for engaging and connecting each drive means to the actuator, whereby said actuator may be selectively connected with said drive means so as to actuate the selected conveyor, and means for limiting the operation of said actuator so as to limit the movement of the selected conveyor.

9. A vending machine including, a casing, a plurality of conveyors mounted within the casing for receiving bottled goods to be dispensed, the casing having openings therein alined with the conveyors whereby the bottles carried by the conveyors may be moved therebeneath so that said bottles may be removed from the casing, individual drive means for each conveyor including a rotatable drive gear, a single common actuator movable longitudinally through each drive gear and having individual means for engaging and connecting each drive means to the actuator, whereby said actuator may be selectively connected with said drive means so as to actuate the selected conveyor, and means for limiting the operation of said actuator so as to limit the movement of the selected conveyor, whereby only a single bottle may move into position for removal beneath the opening alined therewith upon each operation of the actuator.

10. A vending machine including, a casing, a plurality of conveyors mounted within the casing for receiving bottled goods to be dispensed, said casing having openings therein alined with the conveyors whereby the bottles carried by the conveyors may be moved therebeneath so that said bottles may be removed from the casing, individual operating means for each conveyor, a common actuating shaft movable through the individual operating means and having individual means for engaging said individual operating means, whereby the individual operating means may be selectively actuated by moving the shaft to selectively engage its individual means with said individual operating means, a door closing each opening, and means actuated by the operating means of each conveyor for preventing removal of more than a single bottle from the selected conveyor.

JAMES R. CLEM.