Feb. 22, 1949. N. M. HAYNES 2,462,393

COIL WINDING MACHINE

Filed May 4, 1945 3 Sheets-Sheet 1

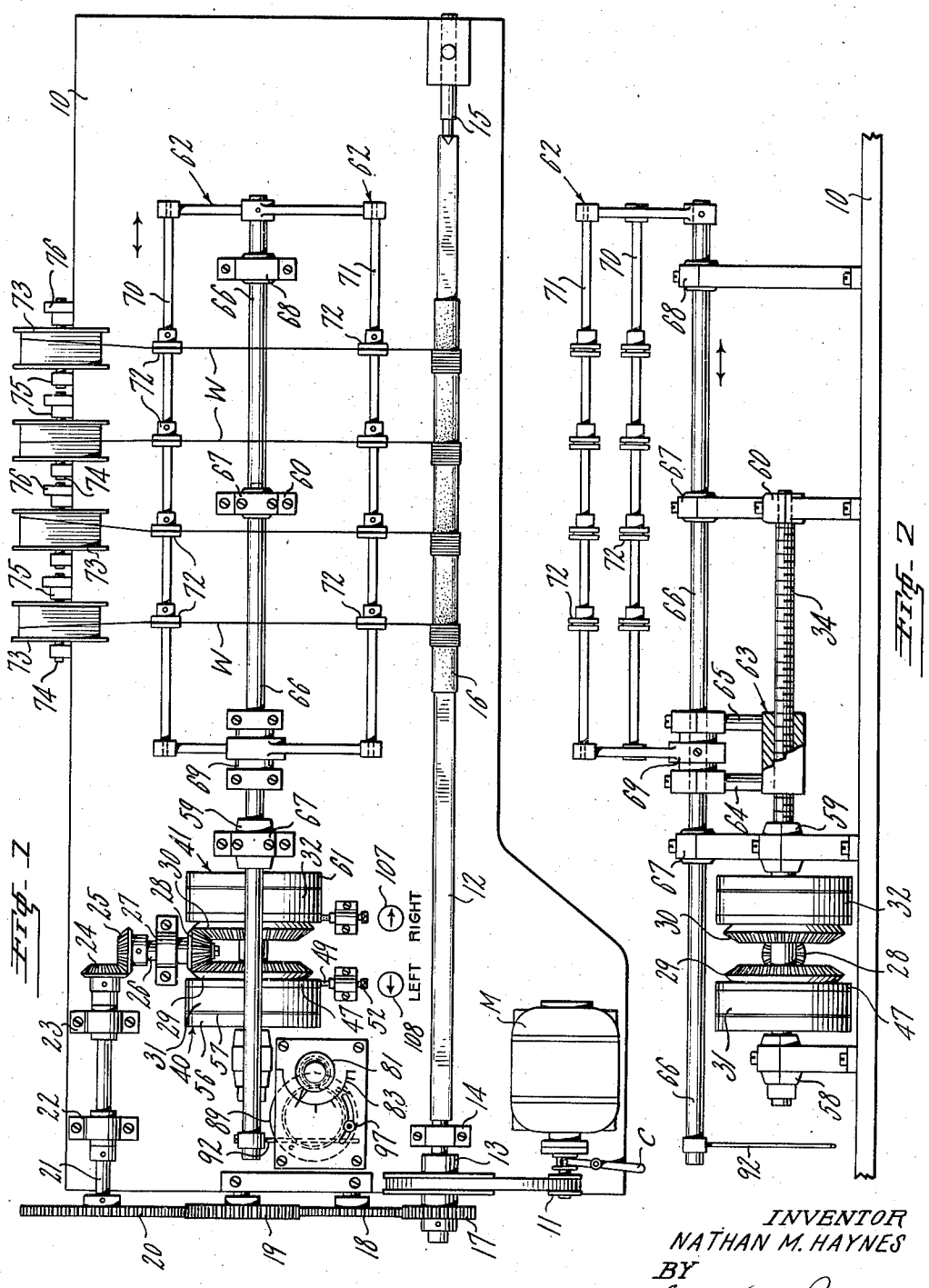


Fig. 1



Fig. 2

INVENTOR
NATHAN M. HAYNES
BY
S. Stephen Baker
ATTORNEY

Feb. 22, 1949. N. M. HAYNES 2,462,393

COIL WINDING MACHINE

Filed May 4, 1945 3 Sheets-Sheet 2

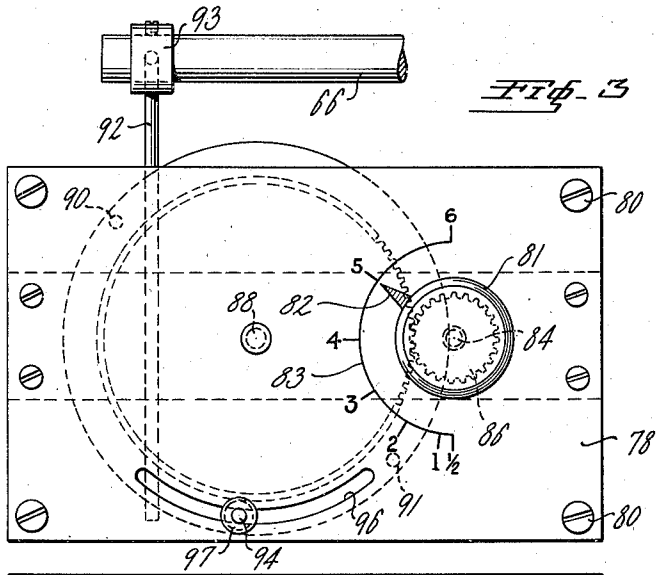


Fig. 3

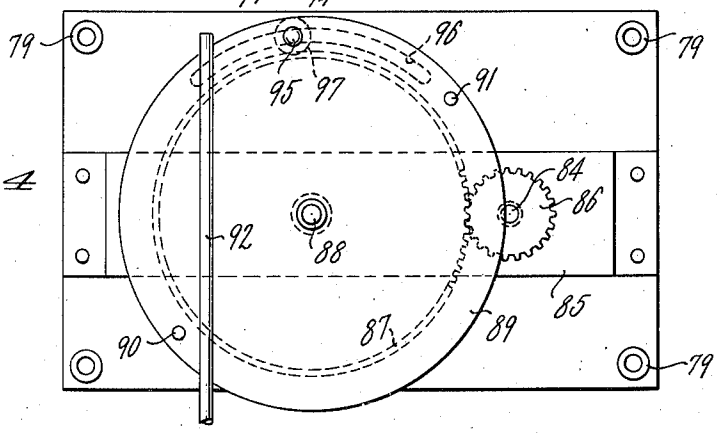


Fig. 4

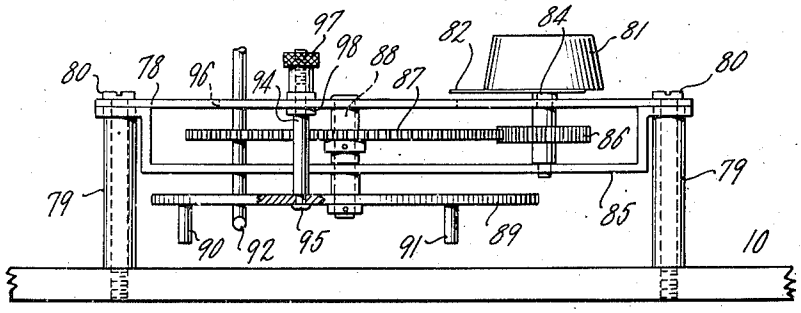


Fig. 5

INVENTOR
NATHAN M. HAYNES
BY
S. Stephen Baker
ATTORNEY

Feb. 22, 1949. N. M. HAYNES 2,462,393

COIL WINDING MACHINE

Filed May 4, 1945 3 Sheets-Sheet 3

Fig. 6

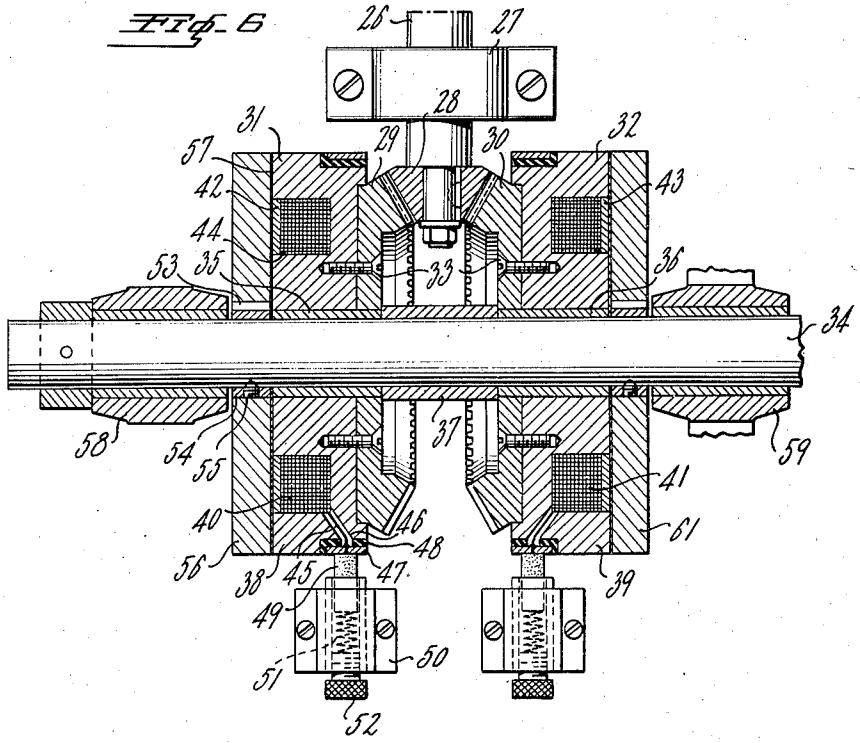


Fig. 7

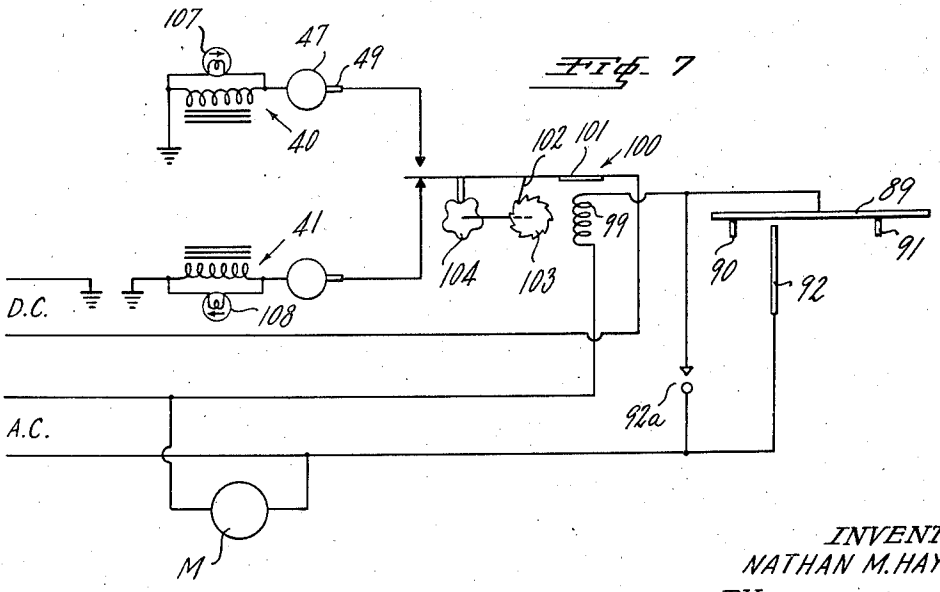


INVENTOR
NATHAN M. HAYNES
BY
S. Stephen Baker
ATTORNEY

Patented Feb. 22, 1949

2,462,393

# UNITED STATES PATENT OFFICE

2,462,393

## COIL-WINDING MACHINE

Nathan M. Haynes, New York, N. Y.

Application May 4, 1945, Serial No. 591,872

11 Claims. (Cl. 242—9)

1

This invention relates to winding machines and more particularly to a winding apparatus for electrical coils. It is an object of this invention to produce an efficient, compact, and simplified winding machine which is adapted to form electrical coils and transformers with rapidity and precision.

Another object of this invention is to produce an improved traverse mechanism for the wire feeding means, the improvement being marked particularly in the provision of special control means which reduces to a minimum the number of moving parts.

Another object of this invention is to provide a convenient and extremely simplified and rapid method of setting the traverse controls so that the traverse mechanism may reciprocate over the correct distance for producing coils having desired winding lengths.

Another object of this invention is to produce a coil winding machine in which the traverse mechanism is so regulated as to form coils and transformers of unusual symmetry, the turns of which are disposed accurately and equally on both sides of an imaginary center line through the center of the coil.

Other objects of my invention will be apparent from the following description thereof, it being understood that the above description of the objects of my invention are intended to describe and not to limit it in any manner.

Referring to the drawings:

Fig. 1 is a top plan view of the machine.

Fig. 2 is a front elevation of a portion of the machine.

Fig. 3 is a top plan view of the traverse control device.

Fig. 4 is a bottom view thereof.

Fig. 5 is a side view thereof.

Fig. 6 is a sectional view of the mechanism for driving the traverse shaft of the wire feeding means.

Fig. 7 is a schematic representation of the electrical controls which determine the length of traverse and direction of the wire feeding means.

The operating and control elements of the machine are mounted on the frame 10. Driving power originates in the motor and is transmitted by clutch C and pulley 11 to the spindle 12 extending from a hub 13 and journalled at one end in bearing 14 while the other end rotates against the conical bearing 15.

A coil form 16 is initially disposed on the spindle 12 so as to form a foundation for the

2

coil although a spool or any other type of core may be used.

Gear 17, secured to hub 13, furnishes driving power for the idler or traverse ratio gears 18 and 19, and gear 20. Gear 20 drives shaft 21 which is journalled in bearings 22 and 23 and which is terminated in bevel gear 24. The provision of traverse ratio gears 18 and 19 is useful in that they may be easily replaced when desired to change the speed of gear 20 and the ensuing traverse driven mechanism.

Bevel gear 24 transmits the driving power to the gear 25, shaft 26 journalled at 27, and pinion 28. Pinion 28 drives the bevel gears 29 and 30 in opposite directions.

As illustrated in Fig. 6, bevel gears 29 and 30 are secured concentrically to and within the circumference of the inner faces of electro-magnetic assemblies 31 and 32 by screws 33 so as to be at the magnetic neutral position of the electro-magnets where they will not become magnetized and pick up metallic particles.

Thus, rotation of bevel gears 29 and 30 in opposite directions produces corresponding rotation of the electro-magnets 31 and 32. The physical connection of the electro-magnets and bevel gears produces virtually unitary structures and it may be considered that the electro-magnets are formed with gearing at one face thereof. Both the bevel gears and associated electro-magnetic assemblies are free in respect to the lead screw shaft 34 around which they rotate. Suitable bushings 35 and 36 are provided and a spacer collar 37 serves to maintain gears 29 and 30 against inward displacement.

The electro-magnetic assemblies 31 and 32 comprise the usual iron cores 38 and 39 and coil windings 40 and 41, respectively. Retainer rings 42 and 43 serve to enclose the coil windings against accidental displacement.

The coil winding 40 has one terminal 44 thereof grounded to the core 38 while the other terminal 45 is led through a port 46 to contact ring 47. As will hereinafter appear, the frame of the device and mechanism mounted thereon may constitute one terminal of the circuit and it is therefore referred to as the "ground" side of the circuit. Contact ring 47 is insulated from the grounded core 38 by the circular insulating member 48. Thus, the coil winding 40 is energized when a suitable electric potential is applied between the grounded structure and the contact ring 47.

Brush 49 serves to apply the electric potential to the contact ring 47 during the rotation thereof. Brush 49 is retained in the brush housing 50

and is provided with the usual coil spring 51 and tightening bolt 52 for insuring proper electrical contact.

Screw shaft 34 is provided with a compound bushing comprising a key 53 formed on a collar 54 which is secured to shaft 34 by set screw 55. Keyed thereby to the shaft 34 for slight axial movement thereon but to rotate therewith, is clutch disk 56 which is adapted to be attracted to electro-magnetic assembly 31 when the coil 40 is energized. This action, as will hereinafter appear, will produce a driving engagement between the electro-magnetic structure and the clutch disk.

A clutch facing 57 of cambric or the like may be secured as by adhesive to the electro-magnetic assembly for both enhancing the frictional contact in the clutching action, and spacing the disk 56 from the core 31 to overcome the effects of residual magnetism when the coil winding is de-energized. Screw shaft 34 is suitably journalled at 58, 59 and 60.

The electro-magnetic assembly 32 is of identical construction as assembly 31 above described including the clutch disk 61 which is keyed to the shaft 34 as is its counterpart clutch disk 56.

Referring to Figs. 1 and 2, the rotation of the screw shaft 34 produces the traverse action of the wire guiding structure 62. Follower 63 which travels along the screw shaft 34 in a direction dependent upon the direction of rotation thereof, is formed with arms 64 and 65 which support the traverse shaft 66. Traverse shaft 66 is suitably journalled in the bearings 67 and 68. Secured at 69 to the traverse shaft 66 so as to travel therewith is the wire guide structure 62, the beams of which 70 and 71 support rollers 72 for guiding the wire W from the wire source or spools 73 to the coil support or spindle 12 for forming the coil layers as illustrated in Fig. 1.

Wire spools 73 are supported on individual shafts 74 which are journalled at their ends in bearings 75 and are supplied with any known type of tension devices 76 for maintaining suitable tension of the wire during the winding operation. Many types of known tension devices are applicable and a conventional type may be employed.

Means for controlling the reversal of the traverse mechanism according to the length of the coil to be formed is provided. As illustrated in Figs. 3, 4, and 5, this traverse control means comprises a panel 78 which is supported by standards 79 and bolts 80 on frame 10. Mounted on the panel 78 is the manually operated knob 81 having a pointer 82 which travels around indicia 83 upon manipulation of the knob. Secured to the knob 81 is a shaft 84 which is journalled in bracket 85 and supports a pinion gear 86.

Pinion gear 86 meshes with gear 87 which is secured to the jack shaft 88. Secured to the end of the shaft 88 is a control member or control disk 89 which rotates in a step down ratio when the knob 81 is manipulated. Control member 89 is provided with two contact arms 90 and 91 which are disposed near the periphery thereof and diametrically opposite each other.

A contact member 92 is secured at 93 to the traverse shaft 66. During the movement of the traverse mechanism the contact member 92 travels therewith but its travel is confined between the contact arms 90 and 91. It can be seen that the separation of these contact arms in respect to the contact member 92 depends upon the



radial position of the control member 89. For example, the separation of the contact arms is greatest when a line connecting the arms would be perpendicular to the contact member 92. The separation would be least when the arms are in substantial alignment with the contact member 92. Means to limit the minimum traverse adjustment is provided as hereinafter shown.

Referring to Fig. 3, it can be seen that the pointer 82 is at the 5 inch mark on the indicia 83 and that the contact arms 90 and 91 are separated to almost the maximum distance in respect to contact member 92. Should the pointer be turned to the 6 inch mark the separation of the contact arms would be greatest. Thus, the manual rotation of knob 81 over indicia 83 fixes or adjusts the separation of the contact arms in respect to the contact member 92. Control member 89 constitutes a physical connection between the contact arms which effectively gangs their operation so that simultaneous and identical movements are provided when knob 81 is actuated. The movements are considered identical with respect to contact member 92 because both contact arms move inwardly and outwardly simultaneously relative to the contact member as they approach or withdraw therefrom.

Means for locking the control disk 89 is provided so that the setting is undisturbed during the operation of the machine. Such means comprises the arm 94, one end 95 of which is secured to the control member 89 while the other end rides in the arcuate slot 96. A knurled thumb nut 97 is provided at the other end and this thumb nut 97 cooperates with a nut 98 in locking the arm 94 and control member 89 in a desired position. The slot 96 also serves to limit the minimum traverse of the traverse mechanism.

The electrical circuit which controls the traverse mechanism is set forth schematically in Fig. 7. Alternating current is shown as actuating the motor and relay mechanism while direct current is shown as energizing the electro-magnetic coils but this is illustrated for clarity only since it is obvious that other arrangements may be made. One terminal of the D. C. circuit may be grounded to the frame 10 if desired so that the mechanism mounted thereon assumes ground potential.

In the operation of the device, one of the electro-magnetic assemblies is normally energized so that the traverse structure may travel in a direction depending upon which electro-magnetic assembly is energized. It may be desirable or necessary under some circumstances to keep the wire guide from travelling. This can be done by opening the common of the D. C. circuit. When it is desired to keep the mandrel 12 stationary while the wire guide travels, a suitable clutch, not shown, on the mandrel may be disengaged.

In Fig. 7, assuming that the contact member 92 is travelling from left to right, it will ultimately make contact with contact arm 91. This will energize coil 99 of the relay switch 100 and will attract the armature 101. Pawl 102 of armature 101 will thereupon advance ratchet wheel 103 which, being ganged to wheel 104, will shift wheel 104 so that a peak 105 rather than a valley 106 is uppermost. Pin 107 will be then in an elevated rather than in a depressed position and the electro-magnetic coil 40 will be energized. This relay switch 100 is known in the art and is often referred to as a pulse relay since it is actuated by successive pulses to assume either one of two operating positions. Other types of

relays or combinations may be used, the desired function being the establishment of contact alternately with the electro-magnets 30 and 31 according to the setting of control member 89. It will be seen that as contact member 92 strikes either contact arm, the direction of the traverse mechanism is reversed since the then open electro-magnetic structure becomes energized and takes control of the rotation of the screw shaft 34 while the functioning electro-magnetic becomes de-energized due to the opening of its circuit by the armature 101. Condensers may be disposed across the contacts in the conventional manner to eliminate excessive sparking. Lamps 107 and 108 are disposed in parallel across electromagnets 40 and 41, respectively, and an arrow together with the words "right" and "left" will indicate the direction of travel thereof. A manually operated control means is provided in the form of pulse switch 92*a* which by-passes the control disk 89 and permits manual control independently of the contact member 92 or contact arms 90 and 91. Thus changes may be made instantly when it is desired to depart from the pre-determined settings.

The machine is operated as follows:

Wire W is initially secured around the spindle 12 and the knob is set for the desired coil length, an operation which spaces contact arms 90 and 91 equidistantly from an imaginary line which represents the centers of the coils to be formed. This insures the production of an accurate and symmetrical coil winding. This construction has other desirable features. For example, should it be required to wind a transformer with a step down secondary, the knob 81 may be re-set when the primary has been wound and the secondary will be formed in the precise central area of the primary since the centers of both secondary and primary will be identical and the coils will be wound symmetrically on both sides of this center. A highly superior transformer and one with balanced leakage reactance may thus be formed with a minimum of adjustment.

The control member 89 having been adjusted and locked, the traverse shaft 66 may be set so that the contact member 92 abuts the left contact arm 90. The drive is then applied whereupon the traverse mechanism travels to the right while depositing the winding over the paper 16. When the contact member 92 contacts the right control arm 91, the traverse mechanism will be shifted so that it will travel to the left. If desired, insulating paper may be disposed over the wound layers after each traverse. The action is continued until the required number of layers is produced.

It will be seen that there is provided an extremely compact and simplified mechanism which winds coils of considerable merit as regards mechanical and electrical symmetry and precision. The electro-magnetic clutch mechanism makes possible the traversing action with a minimum of moving parts since the virtual incorporation of the electro-magnets into the reversible gears eliminates the necessity of a pivoted clutch arm operated electro-magnetically. Thus, the electro-magnets are disposed directly around the screw shaft and the clutching action is accomplished without interrupting or establishing the meshing of gears each time a reversal of the traverse is effected. In addition, the traverse control means is fool-proof and instantaneously operated. The simple method of setting the knob 81 according to the indicia 83 eliminates many unwieldly and complex setting up operations. If larger coils are desired, a control member of greater diameter may be employed. The machine may be employed where winding operations such as above set forth are required whether coils, transformers, or spools of wire are to be produced.



It is to be noted, however, that the follower 63 is never disengaged from the lead screw shaft 34. No lag in their engaging action is possible. This offers a considerable advantage in attaining a high degree of precision since any movement of the screw shaft is translated into traverse action while prior art devices which do not maintain constant engagement permit relative movement until the engagement becomes complete and effective.

I have shown a preferred embodiment of my invention but it is obvious that numerous changes and omissions may be made without departing from its spirit.

What is claimed is:

1. A coil winding machine comprising a rotatable support for a coil to be wound, drive means for said support, a wire supply, means to deposit wire from said supply to said support so as to form a coil thereabout, traverse means shiftable to guide said wire while being deposited on said support, reversible drive means for said traverse means whereby said traverse means is moved back and forth to produce superimposed coil layers, said reversible drive means comprising a pinion gear and a pair of bevel gears oppositely driven by said pinion gear, a screw shaft, each of said bevel gears being rotatable around and free of said screw shaft, a pair of electro-magnetic disks, each of said electro-magnetic disks being secured to one of said bevel gears so as to be rotatable therewith, a pair of clutch disks keyed to said screw shaft, each of said clutch disks being mutually separated by and facing said electro-magnetic disks so as to be in respective operative relation thereto, an electrical contact ring rotatable with each of said electromagnetic disks and adapted to transmit electric potential for energizing its associated electromagnetic disk, a brush member bearing against each said contact ring for supplying said potential thereto, means to energize each electro-magnetic disk alternately according to the dimensions of the coil to be formed whereby said shaft is driven alternately in opposite directions, and means to translate said alternate movements of said shaft into said back and forth movements of said traverse means.

2. A coil winding machine comprising a coil support, a wire supply, means to deposit wire from said supply to said support so as to form coil windings thereabout, traverse means for causing relative lateral movement between said depositing means and said support so as to deposit successive coil turns laterally on said support, electro-magnetic reversible drive means for said traverse means, and control means for regulating the reversal of said electro-magnetic reversible drive means, said control means comprising a contact member on said traverse means, a control member, a pair of spaced contact arms fixedly connected to said control member, said spacing being relative to said contact memper and depending upon the length of the coil to be formed, and means to adjust said control member so as to simultaneously vary the spacing of both of said contact arms relative to said control member.

3. A coil winding machine comprising a coil

support, a wire supply, means to deposit wire from said supply to said support so as to form coil windings thereabout, traverse means for causing relative lateral movement between said depositing means and said support so as to deposit successive turns laterally on said support, electromagnetic reversible drive means for said traverse means and control means for regulating the reversal of said electro-magnetic reversible drive means, said control means comprising a contact member on said traverse means, a control member, a pair of spaced contact arms on said control member, means to cause simultaneous inward and outward movements of both said contact arms in respect to said contact member so as to vary the distance between said contact arms in respect to said contact member, said contact member being adapted to travel between said contact arms, and means to reverse the direction of said electro-magnetic reversible drive means each time said contact member meets either of said contact arms.

4. A coil winding machine comprising a coil support, a wire supply, means to deposit wire from said supply to said support so as to form coil windings thereabout, traverse means for causing relative lateral movement between said depositing means and said support so as to deposit successive coil turns laterally on said support, electro-magnetic reversible drive means for said traverse means, and control means for regulating the reversal of said electro-magnetic reversible drive means, said control means comprising a contact member on said traverse means so as to travel therewith, a control member, a pair of spaced contact arms on said control member between which said contact member is adapted to travel, the spacing of said contact arms relative to said contact member being adjustable so as to regulate the extent of travel of said contact member, said contact arms having a physical connection between them, a manually operated member on said physical connection for causing simultaneous identical movement of both said contact arms relative to said contact member so as to vary said spacing of said contact arms relative to said contact member, and means to reverse the direction of said electromagnetic reversible drive means each time said contact member meets either of said contact arms during the travel of said contact member.

5. A coil winding machine according to claim 3 wherein said physical connection comprises a disk and wherein said contact arms are disposed adjacent to the periphery of said disk, said disk being rotatable by said manually operated member whereby both said contact arms may simultaneously approach or withdraw from said contact member as said disk is rotated.

6. A coil winding machine comprising a support for a coil to be wound, a source of driving power, a wire supply, means to deposit wire from said wire supply to said support so as to form a coil thereabout, traverse means for causing continuous relative lateral movement between said depositing means and said support so as to deposit successive coil turns laterally on said support, reversible drive means for said traverse means, said reversible drive means comprising a driven shaft, oppositely rotatable electromagnetic structures, a pair of spaced clutch members secured to said driven shaft and on both sides of said electro-magnetic structures and independently acted upon by said electro-magnetic structures for effecting the rotation of said shaft alternately in opposite directions, and means to translate the alternate rotation of said shaft into a reversible drive for said traverse means, said electro-magnetic structures being rotatable around said driven shaft and free thereof, and means to alternately energize said electro-magnetic structures whereby said attraction between said structures and each of said clutch members respectively effects rotation of said shaft according to the alternate energization of said electro-magnetic structures.

7. A coil winding machine comprising a coil support, drive means for said support, a wire supply, means to deposit wire from said supply to said support, traverse means shiftable to guide said wire while being deposited on said support, and reversible drive means for said traverse means, said reversible drive means comprising a shaft, a pair of oppositely rotatable electro-magnetic structures on said shaft and a pair of spaced clutch members respectively and independently controlled by each of said electro-magnetic structures for alternately applying the rotating action of each of said electro-magnetic structures to said shaft whereby said shaft is alternately driven in opposite directions, said electro-magnetic structures being disposed between said pair of clutch members along said shaft.

8. A coil winding machine comprising a coil support, drive means for said support, a wire supply, means to deposit wire from said supply to said support, traverse means shiftable to guide said wire while being deposited on said support, and reversible drive means for said traverse means, said reversible drive means comprising a shaft, a pair of oppositely rotatable electromagnetic structures on said shaft, a pair of gears for rotating said electro-magnetic structures respectively disposed against and within the circumference of the inner faces of said structures and concentric therewith and adjacent each other, means to rotate said gears in opposite directions and a pair of clutch members respectively, independently, and alternately actuated by said electro-magnetic structures for alternately applying the rotating action of each of said electro-magnetic structures to said shaft whereby said shaft is alternately driven in opposite directions, each of said clutch members being on respectively opposite sides of said electro-magnetic structures.

9. A coil winding machine comprising a coil support, a wire supply, means to deposit wire from said supply to said support so as to form coil windings thereabout, traverse means for causing relative lateral movement between said depositing means and said support so as to deposit successive turns laterally on said support, electro-magnetic reversible drive means for said traverse means, and control means for regulating the reversal of said electro-magnetic reversible drive means, said control means comprising a travelling contact member, a pair of contact arms, said contact member being adapted to travel between said contact arms, means to reverse the direction of said reversible drive means each time said contact member meets either of said contact arms, and means to cause the simultaneous motion of both said contact arms relative to said contact member to adjust the length of the coil to be formed, said simultaneous motion causing means comprising a ganged connection between said contact arms and a manually operated member on said ganged connection for

varying the spacing of said contact arms relative to the travelling contact member.

10. A coil winding machine comprising a coil support, drive means for said support, a wire supply, means to feed wire from said supply to said support so as to form a coil thereabout, traverse means shiftable to guide said wire while being fed to said support, reversible drive means for said traverse means, said reversible drive means comprising a shaft, a pair of oppositely rotatable electro-magnetic structures on said shaft, a pair of clutch members on said shaft, means to alternately apply the rotating action of each of said electro-magnetic structures respectively to said clutch members by electro-magnetic attraction, whereby said shaft is alternately driven in opposite directions, said alternate rotation applying means comprising a contact member on said traverse means, so as to travel therewith, a pair of spaced contact arms between which said contact member travels, means to alternately energize each of said oppositely rotating electro-magnetic structures each time said contact member meets either of said contact arms during the travel of said contact member whereby a clutch member is engaged by said energized electro-magnetic structure, the spacing of said contact arms relative to said contact member being adjustable according to the length of the coil to be formed, said contact arms being ganged for simultaneous and identical movement relative to said contact member during said adjustment thereof, and a manually operated member for effecting said adjustment.

11. A coil winding machine comprising a coil support, drive means for said support, a wire supply, means to feed wire from said supply to said support so as to form a coil thereabout, traverse means shiftable to guide said wire while being fed to said support, reversible drive means for said traverse means, said reversible drive means comprising a shaft, a pair of oppositely rotatable electro-magnetic structures on said shaft, a pair of clutch members on said shaft, means to alternately apply the rotating action of each of said electro-magnetic structures respectively to said clutch members by electro-magnetic attraction, whereby said shaft is alternately driven in opposite directions, said alternate rotation applying means comprising a contact member on said traverse means, so as to travel therewith, a pair of spaced contact arms between which said contact member travels, means to alternately energize each of said oppositely rotating electro-magnetic structures each time said contact member meets either of said contact arms during the travel of said contact member whereby a clutch member is engaged by said energized electro-magnetic structure, the spacing of said contact arms relative to said contact member being adjustable according to the length of the coil to be formed, a disk for supporting said contact arms, said contact arms being disposed adjacent to the periphery of said disk, and a manually operated member for rotating said disk whereby both said contact arms may simultaneously approach or withdraw from said contact member as said disk is rotated so as to vary the spacing of said contact arms relative to said contact member.



NATHAN M. HAYNES.


## REFERENCES CITED

The following references are of record in the file of this patent:

### FOREIGN PATENTS

| Number | Country | Date |
|---|---|---|
| 287,295 | Great Britain | Mar. 22, 1927 |
| 322,318 | Great Britain | Dec. 5, 1929 |
| 451,528 | Great Britain | Aug. 7, 1936 |