US 20030199990A1

(19) United States

(12) Patent Application Publication

(10) Pub. No.: US 2003/0199990 A1

(43) Pub. Date: Oct. 23, 2003

Stack et al.

(54) SATIATION DEVICES AND METHODS

(76) Inventors: **Richard S. Stack**, Chapel Hill, NC (US); **Richard A. Glenn**, Chapel Hill, NC (US); **Trevor J. Moody**, Seattle, WA (US); **Fred E. Silverstein**, Seattle, WA (US); **Nathan Every**, Seattle, WA (US); **William S. Eubanks JR.**, Durham, NC (US)

Correspondence Address:
STALLMAN & POLLOCK LLP
Suite 290
121 Spear Street
San Francisco, CA 94105 (US)

(21) Appl. No.: **10/457,137**

(22) Filed: **Jun. 9, 2003**

Related U.S. Application Data

(62) Division of application No. 09/940,110, filed on Aug. 27, 2001.

Publication Classification

(51) **Int. Cl.**[7] **A61F 2/04**

(52) **U.S. Cl.** **623/23.65**; 623/23.7

(57) **ABSTRACT**

A device for inducing weight loss in a patient includes a tubular prosthesis self-expandable from a collapsed position in which the prosthesis has a first diameter to an expanded position in which the prosthesis has a second, larger, diameter. In a method for inducing weight loss, the prosthesis is placed in the collapsed position and inserted into a stomach of a patient. The prosthesis is allowed to self-expand from the collapsed position to the expanded position and into contact with the walls of the stomach, where it induces feelings of satiety and/or inhibits modulation of satiety-controlling factors such as Ghrelin.

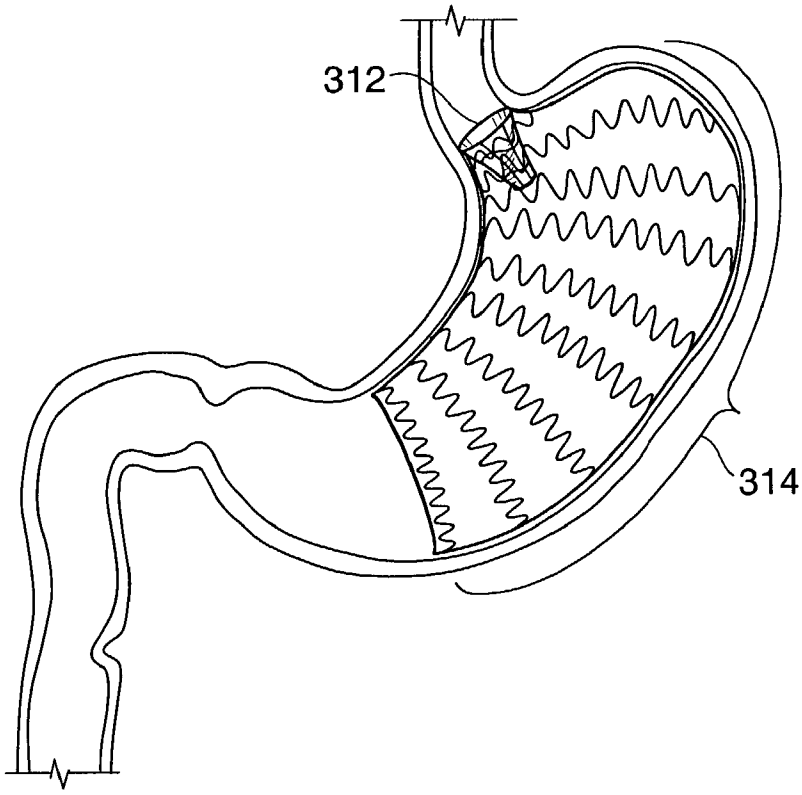

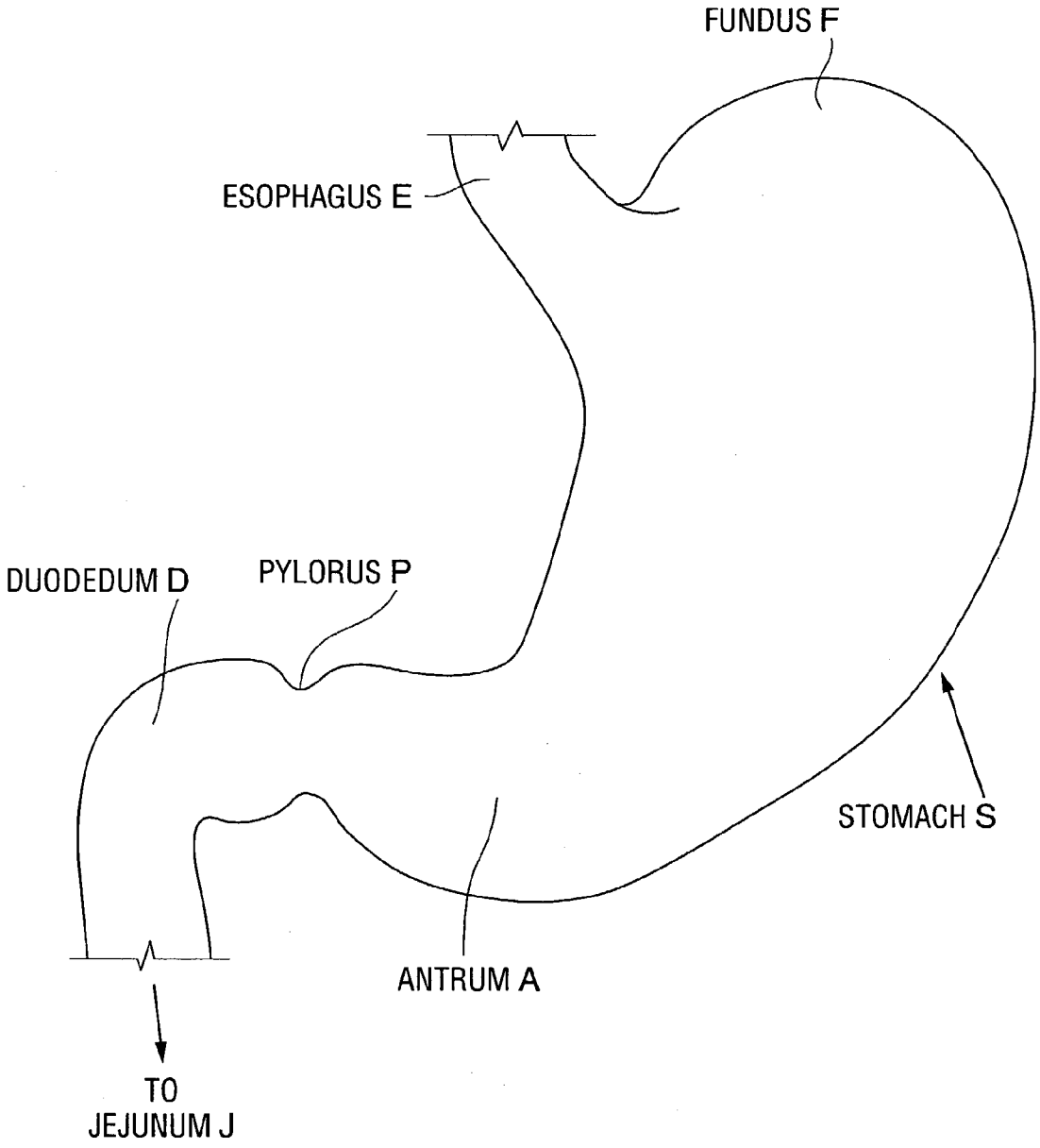
FUNDUS F
ESOPHAGUS E
DUODEDUM D
PYLORUS P
STOMACH S
ANTRUM A
TO
JEJUNUM J

FIG. 1

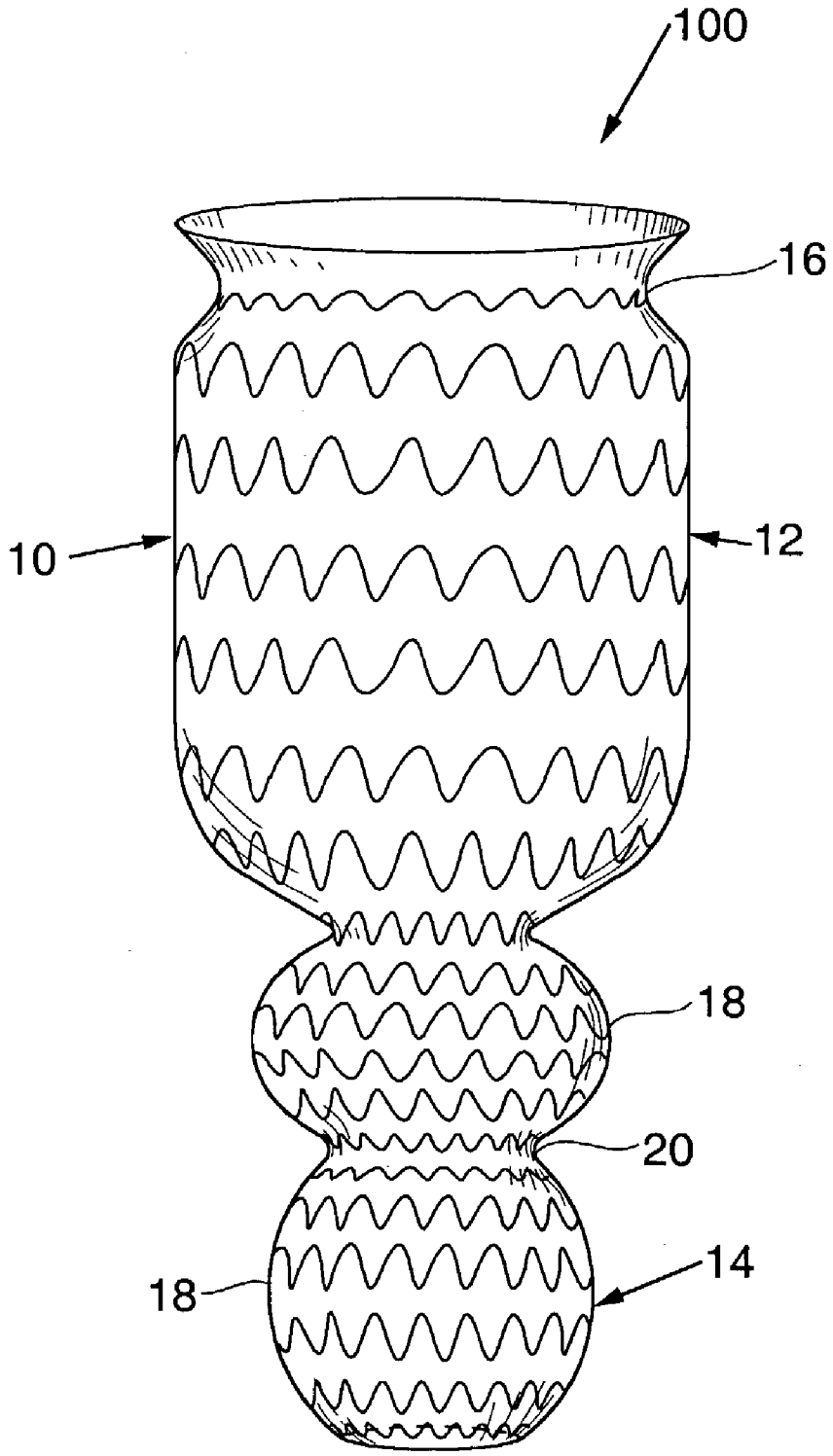

FIG. 2

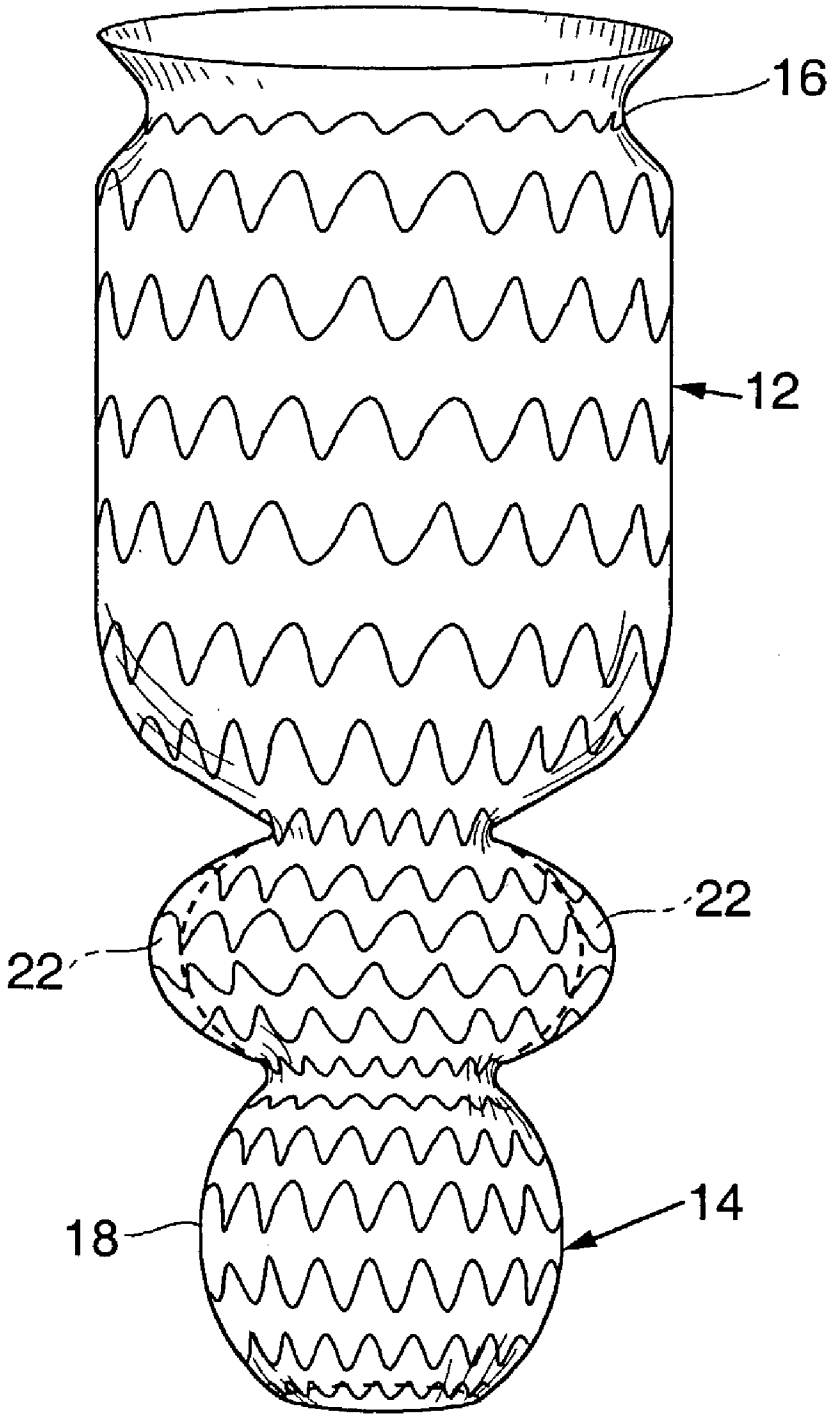

FIG. 3

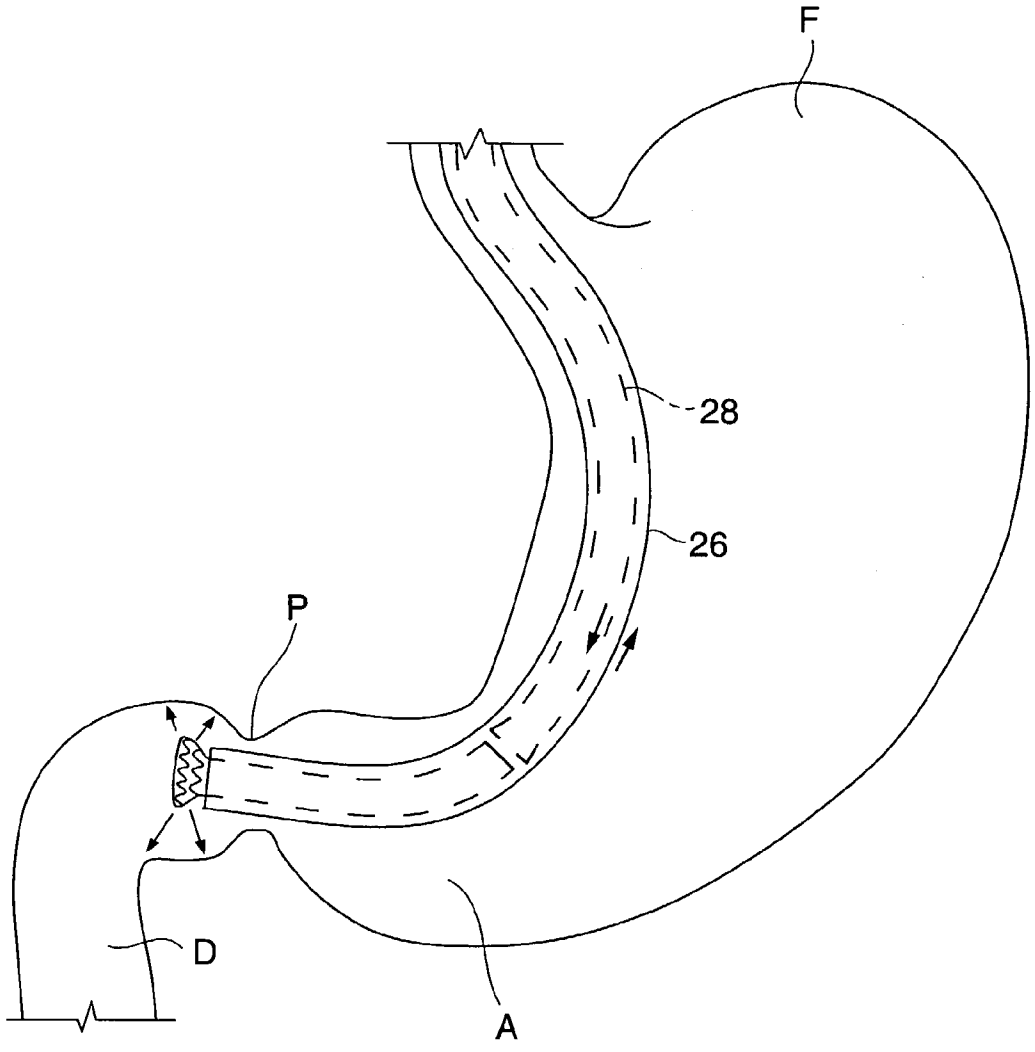

FIG. 4A

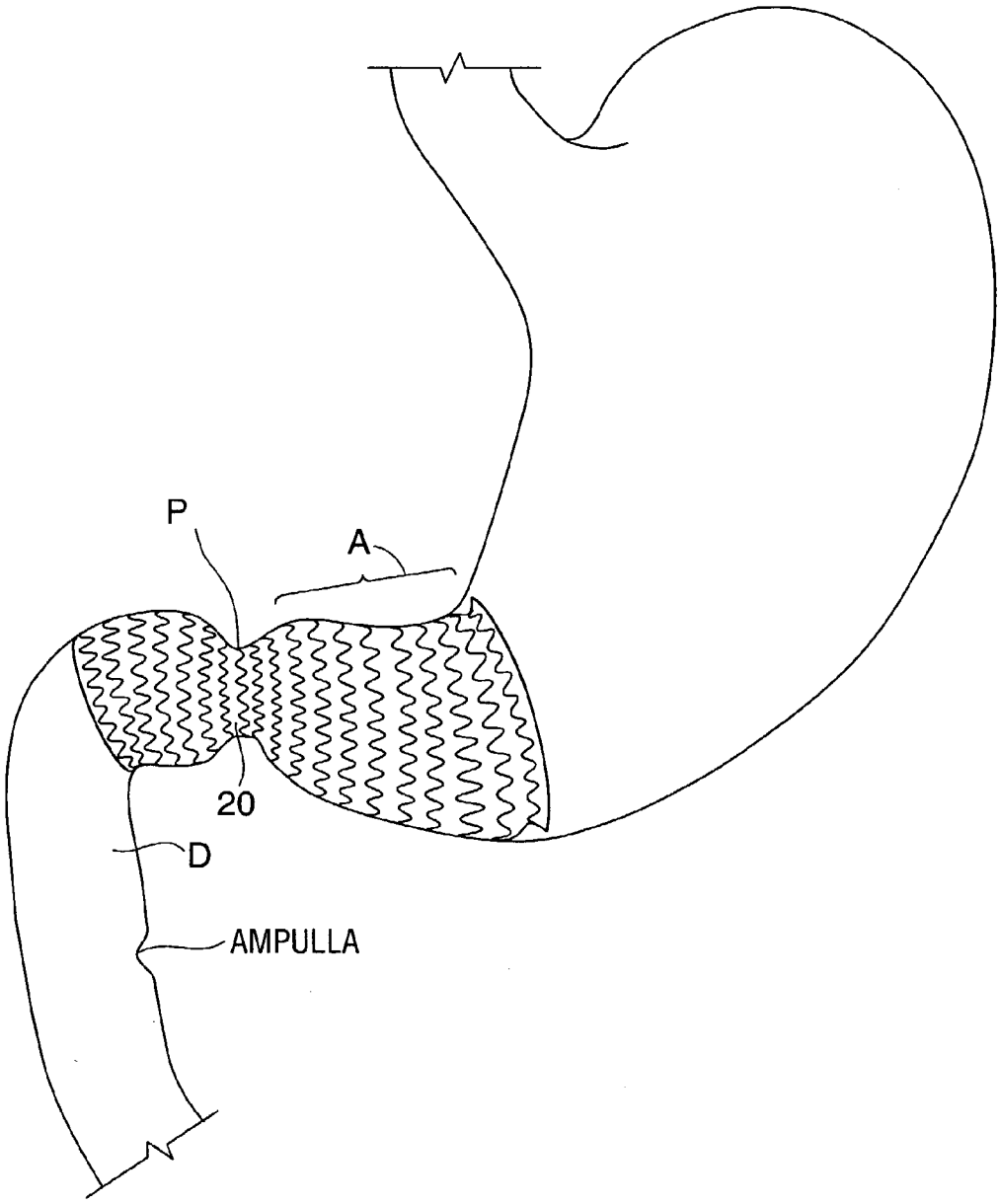

FIG. 4B

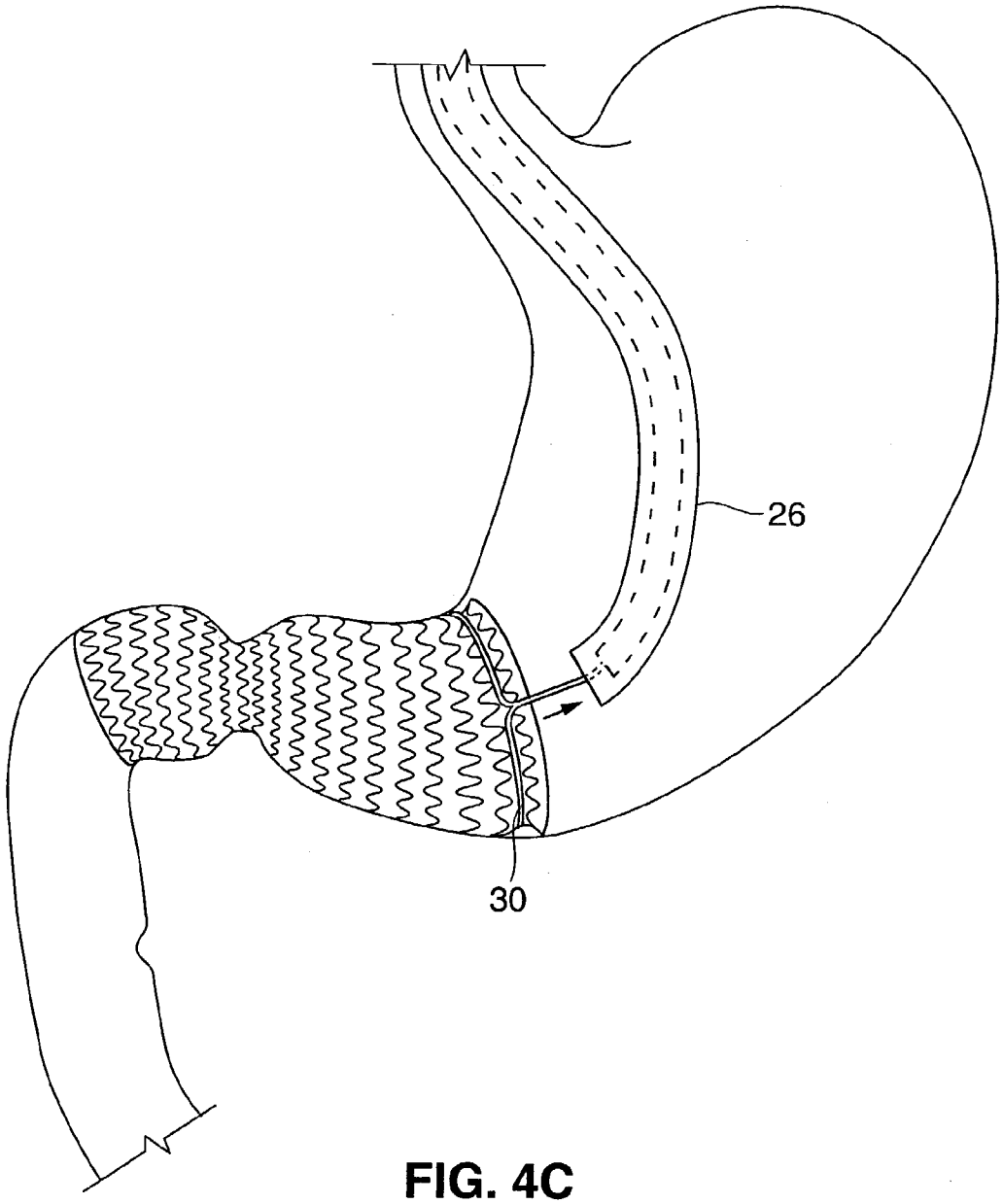

FIG. 4C

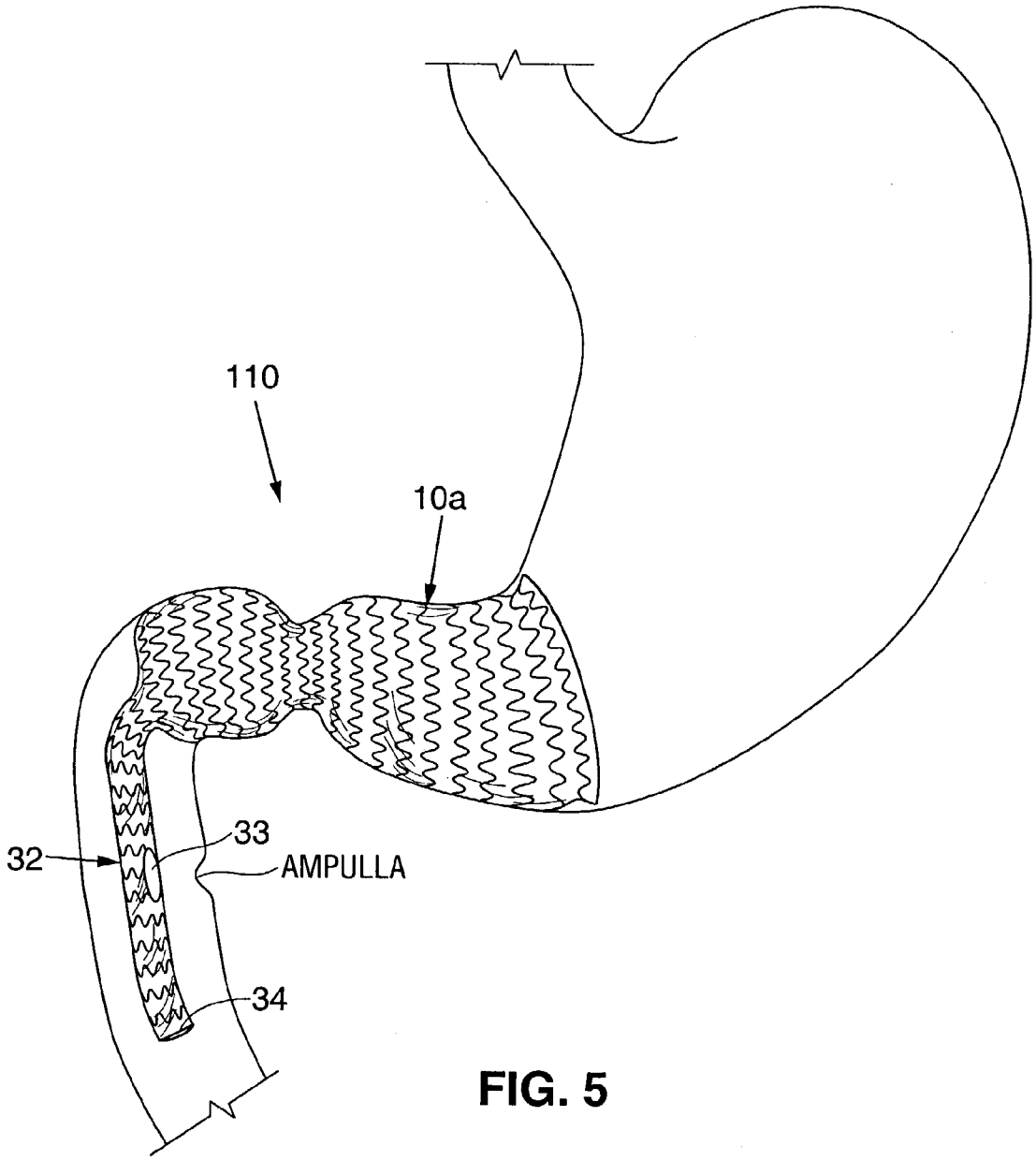

FIG. 5

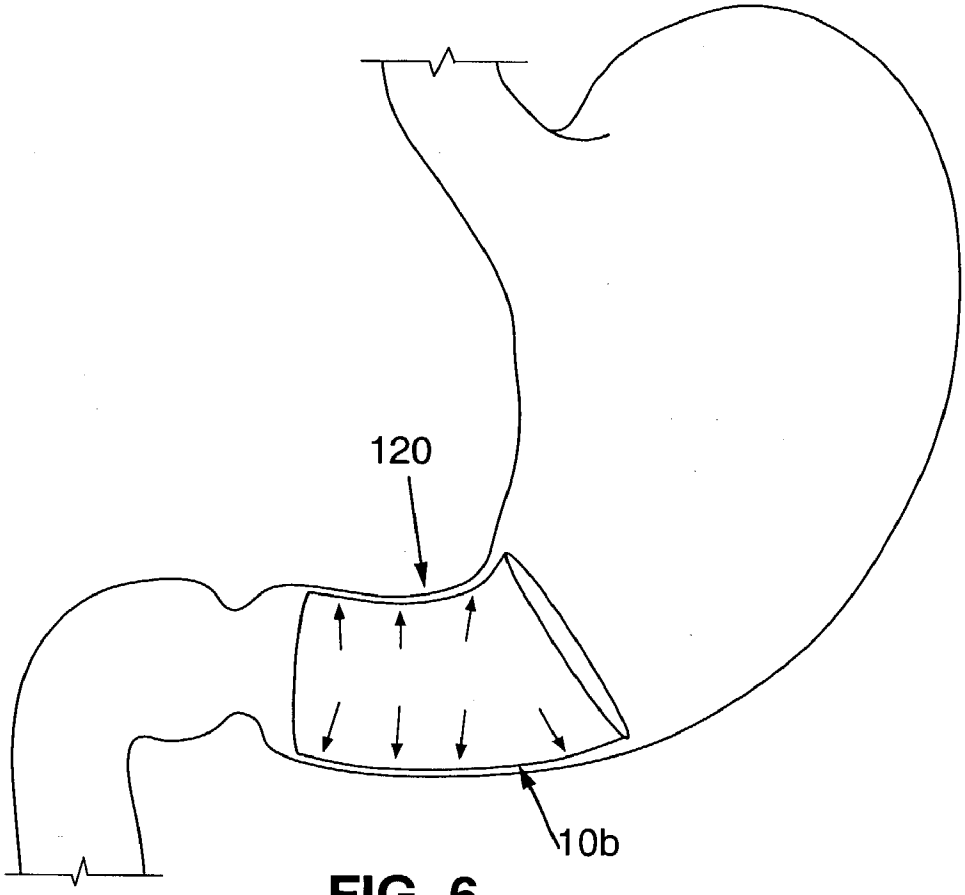

FIG. 6

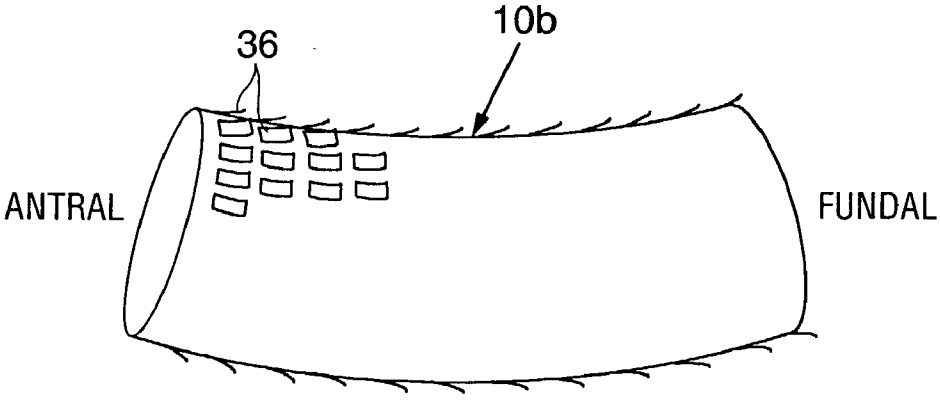

FIG. 7

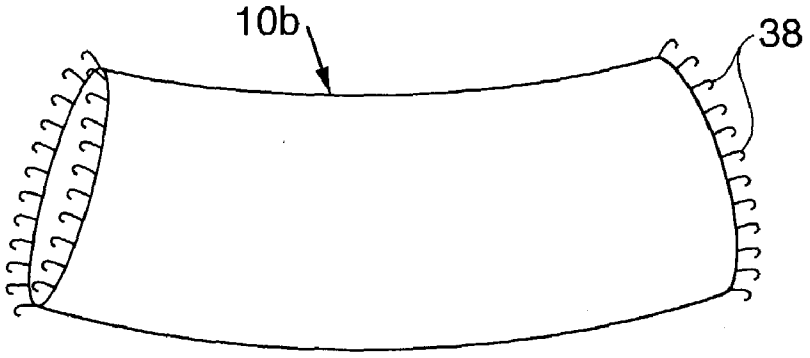

FIG. 8

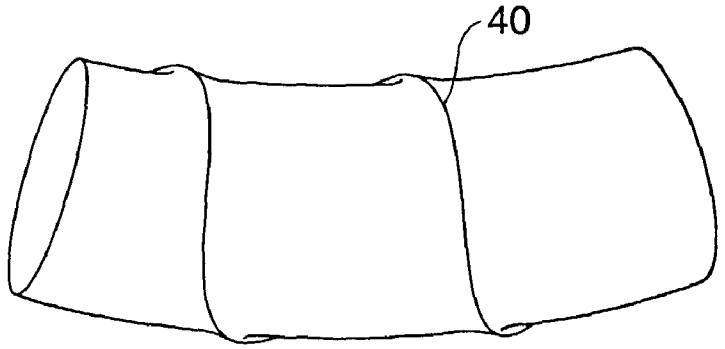

FIG. 9A

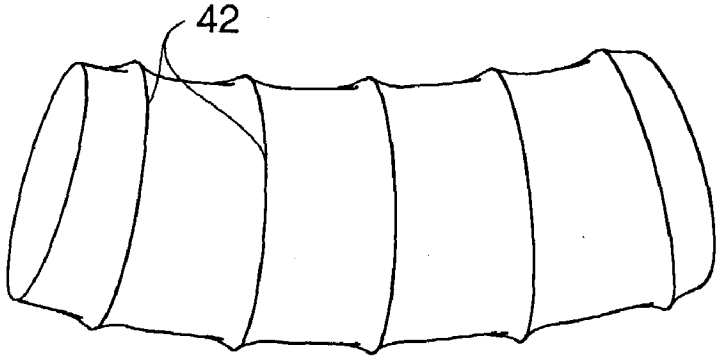

FIG. 9B

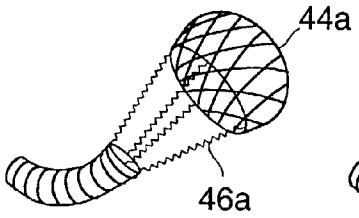

FIG. 10A

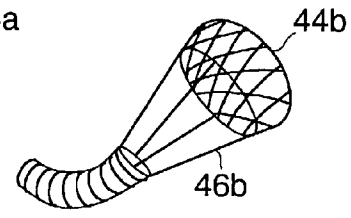

FIG. 10B

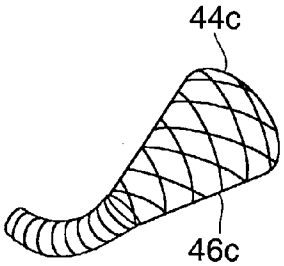

FIG. 10C

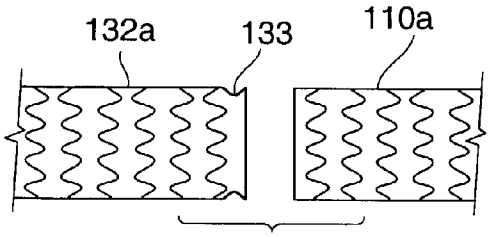

FIG. 10D

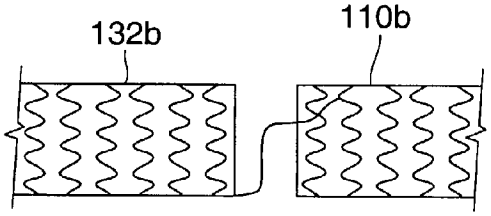

FIG. 10E

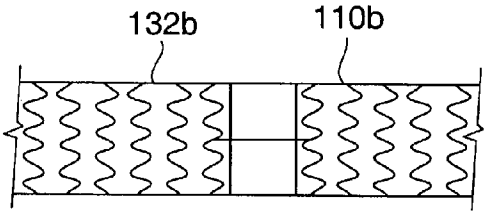

FIG. 10F

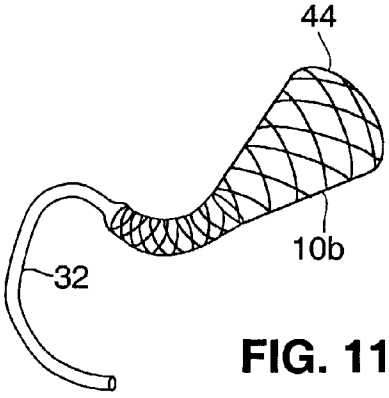

FIG. 11

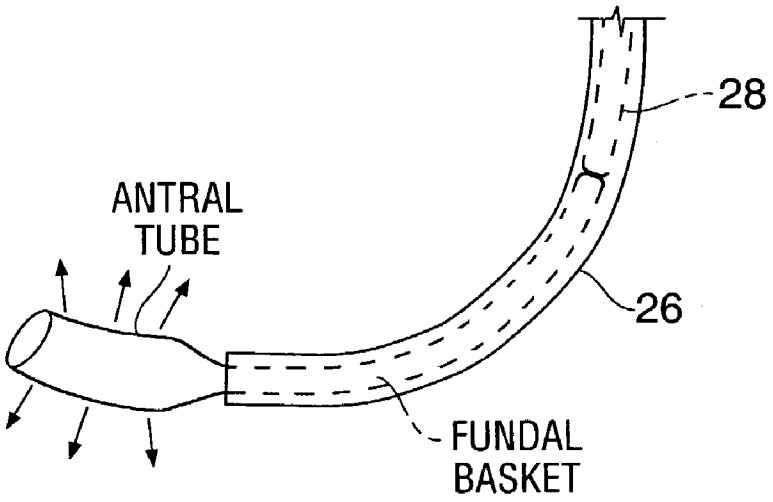

FIG. 12A

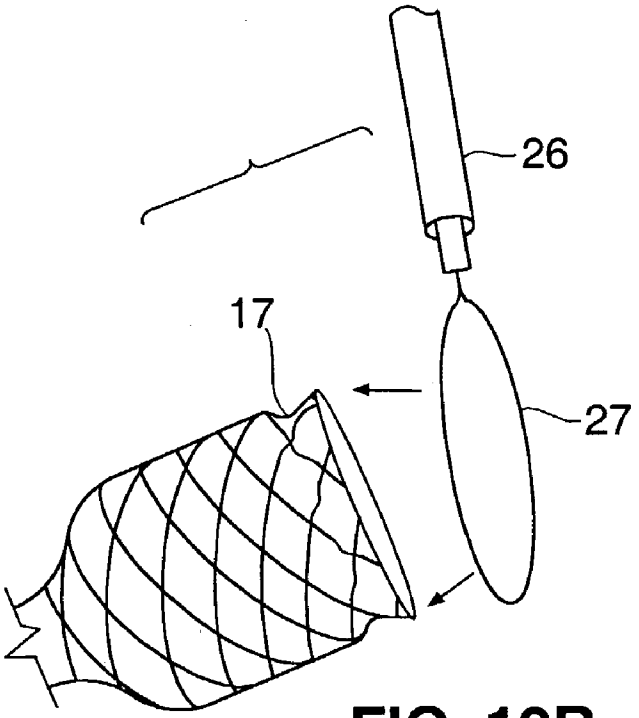

FIG. 12B

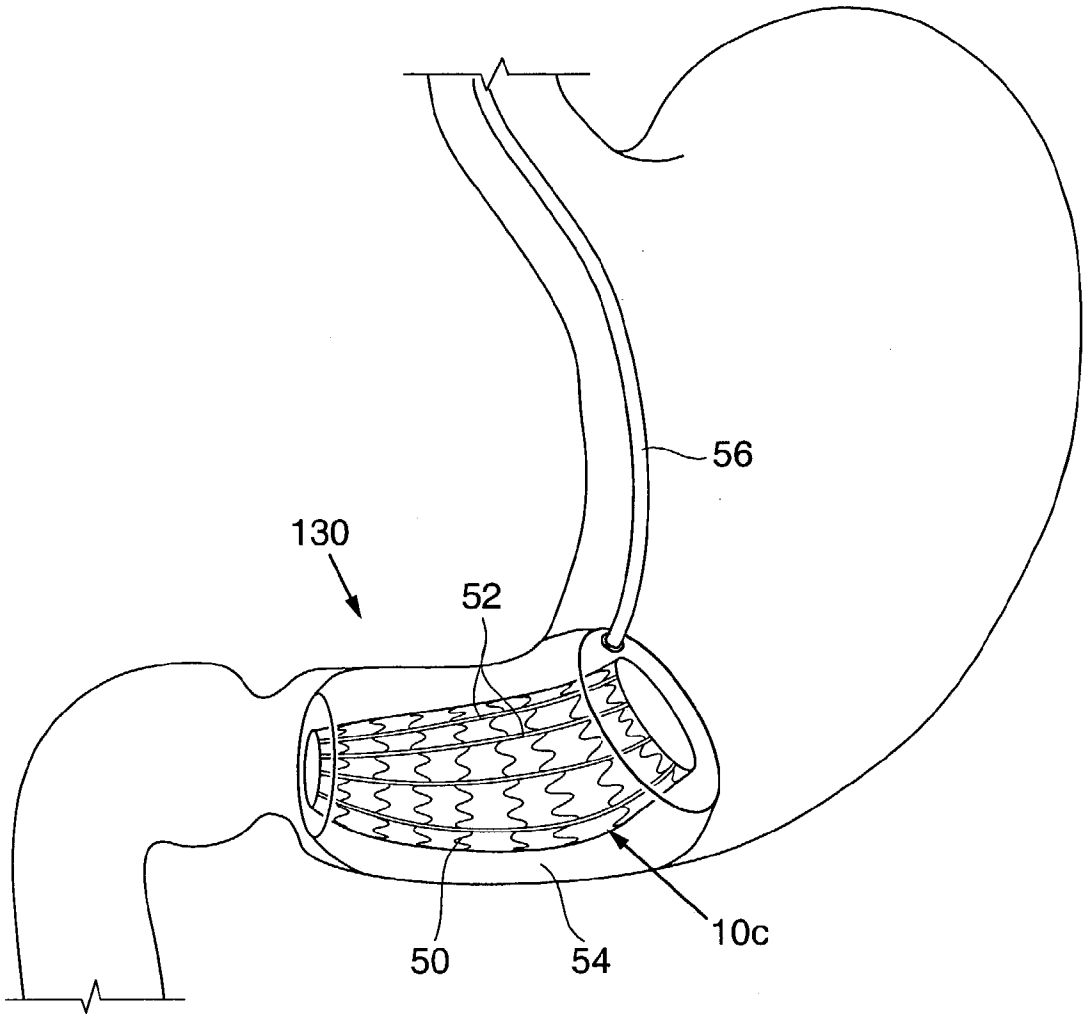

FIG. 13

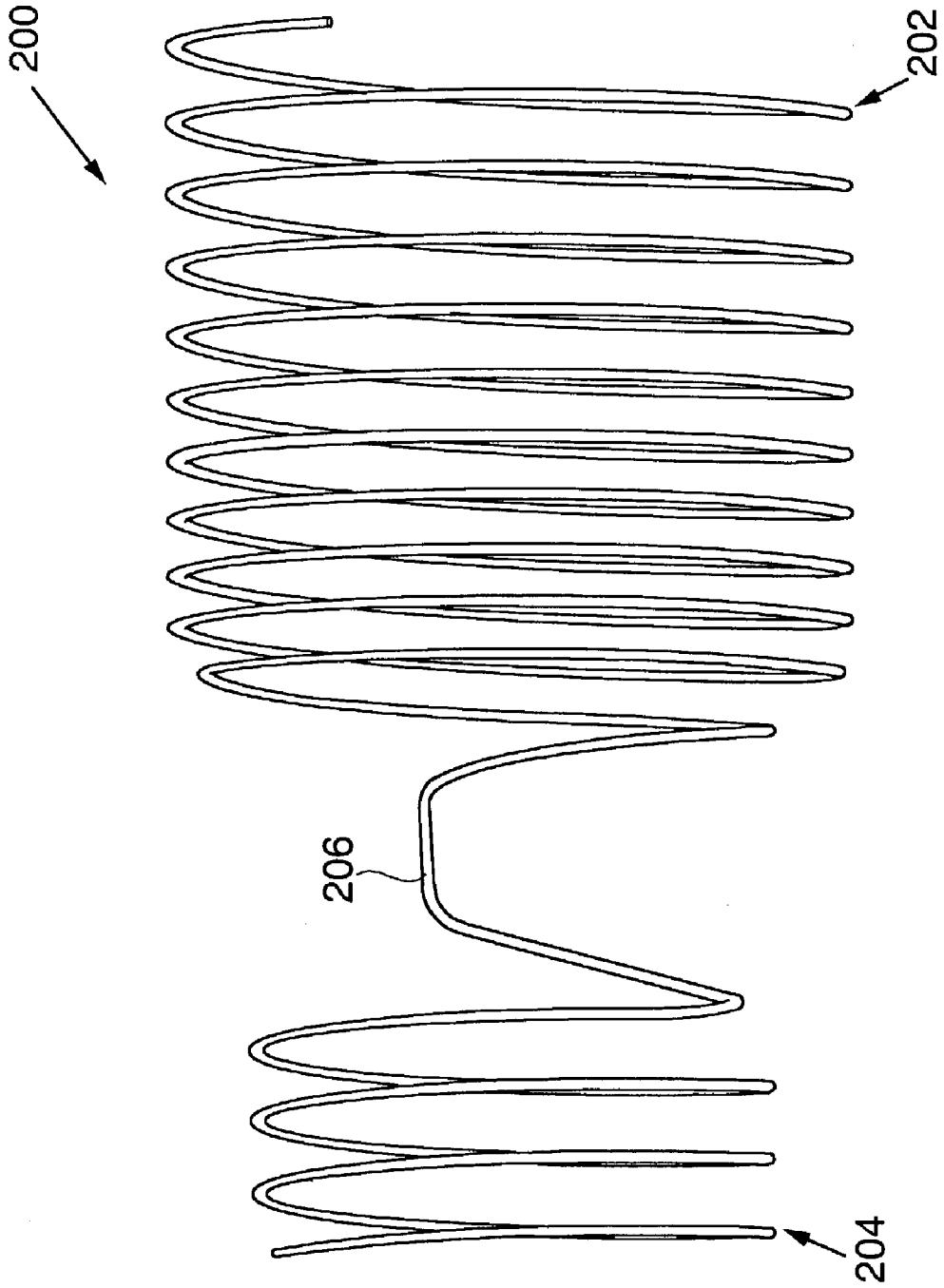

FIG. 14

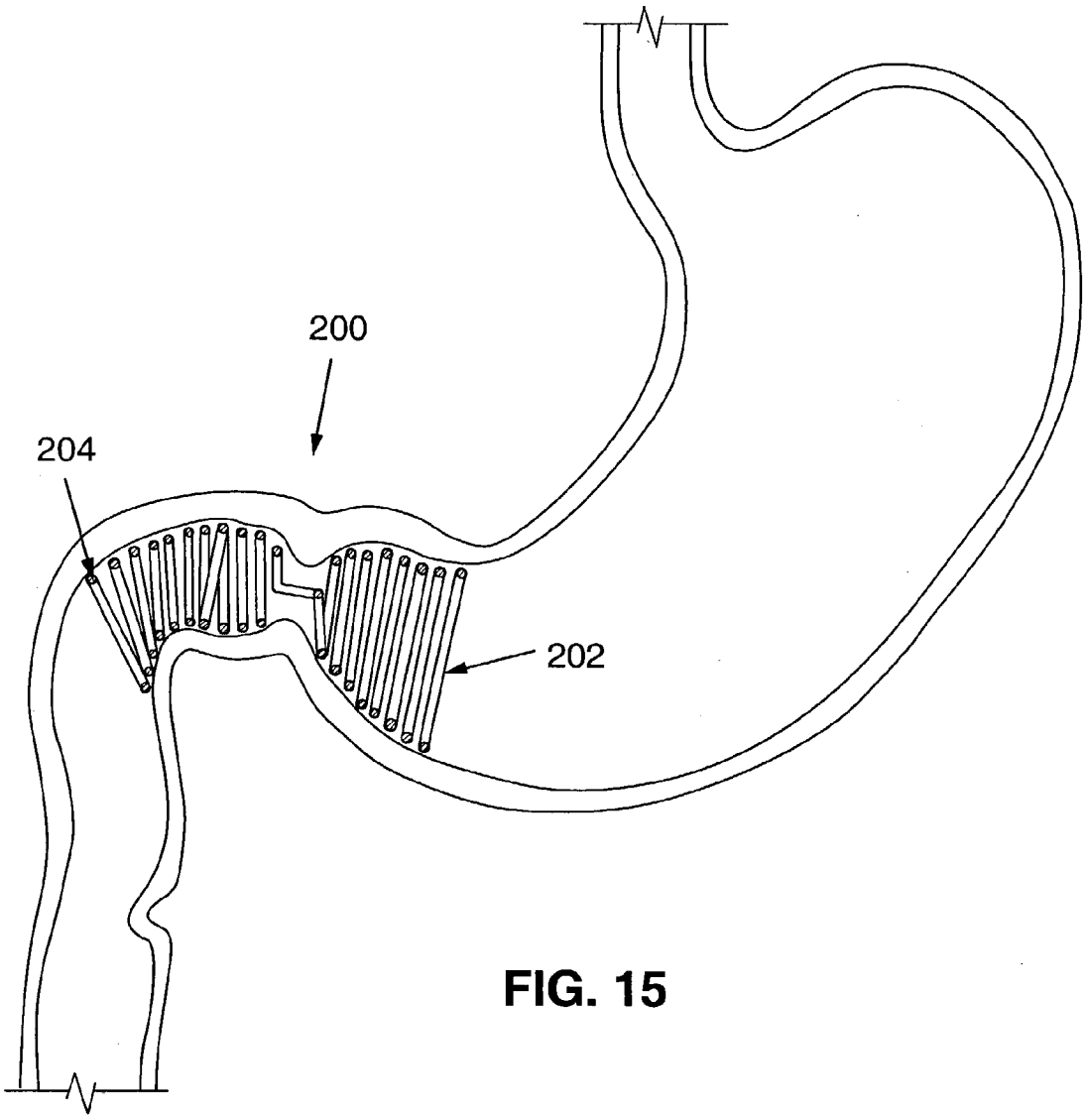

FIG. 15

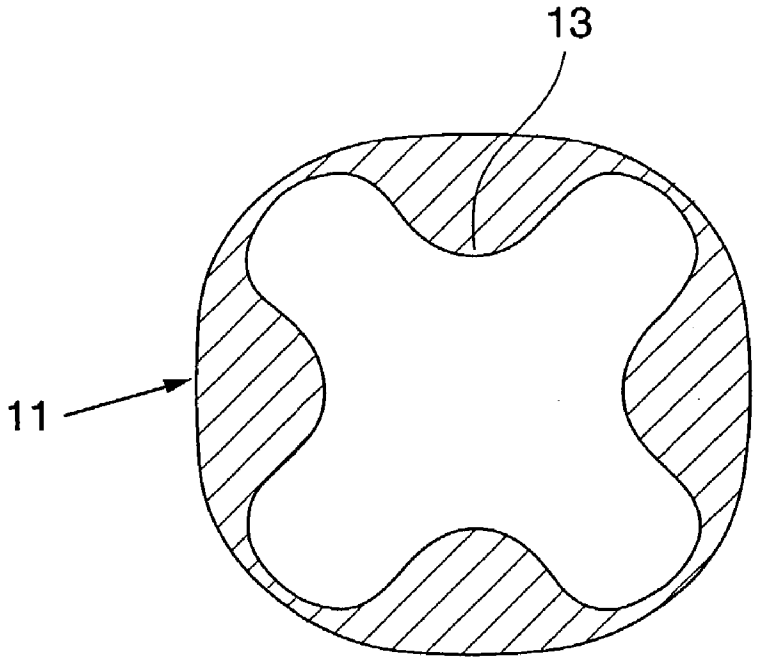

FIG. 16A

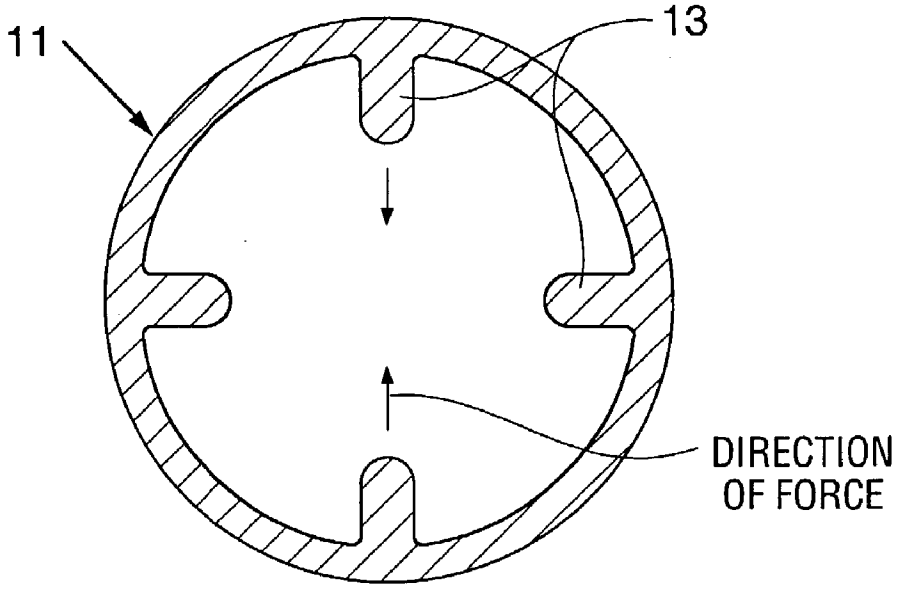

FIG. 16B

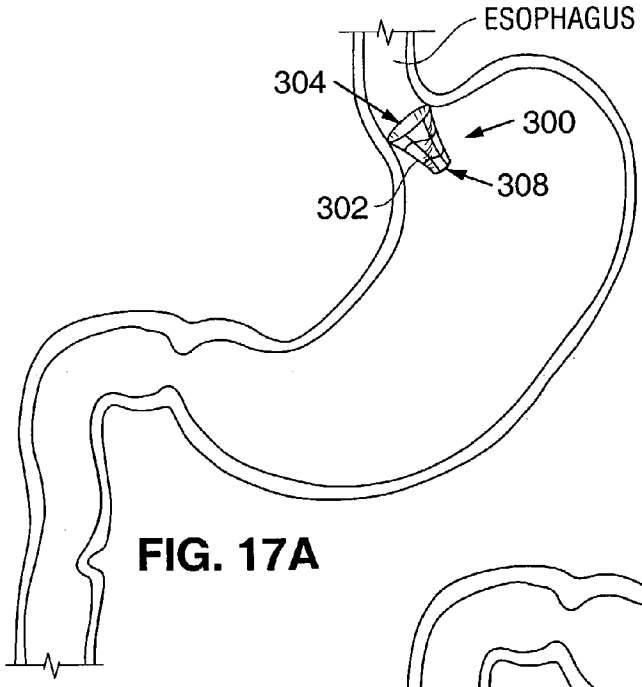

FIG. 17A

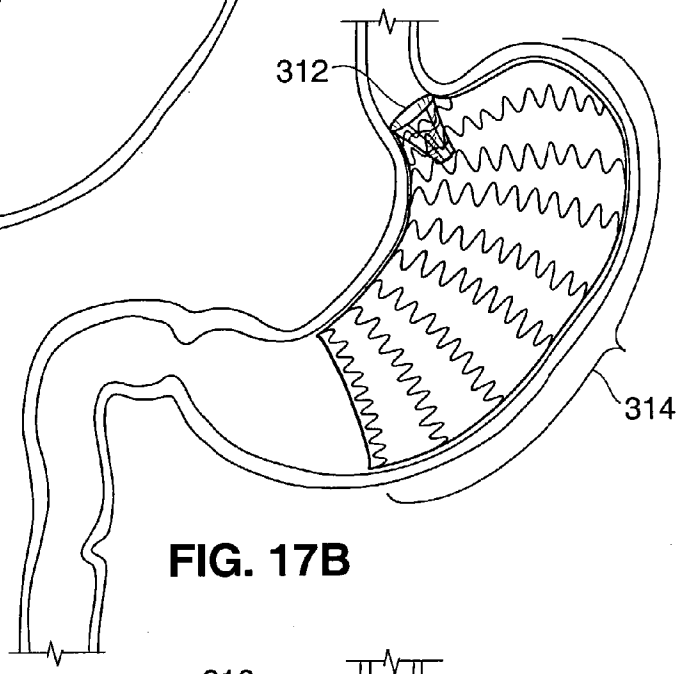

FIG. 17B

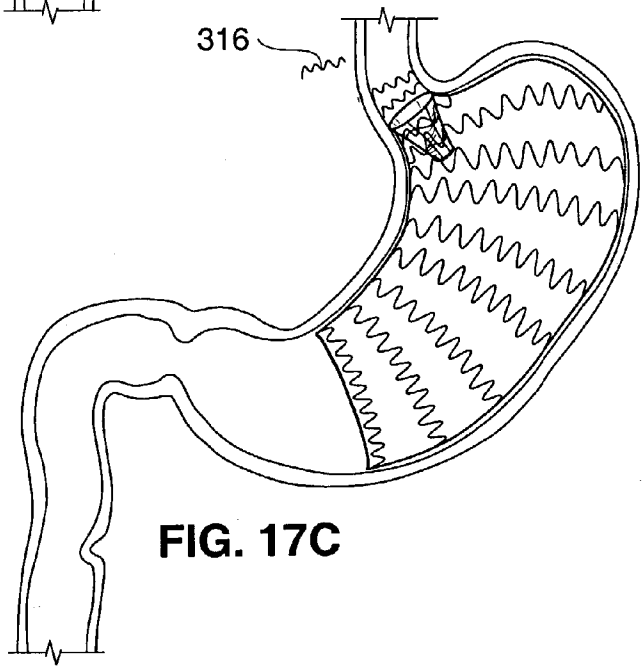

FIG. 17C

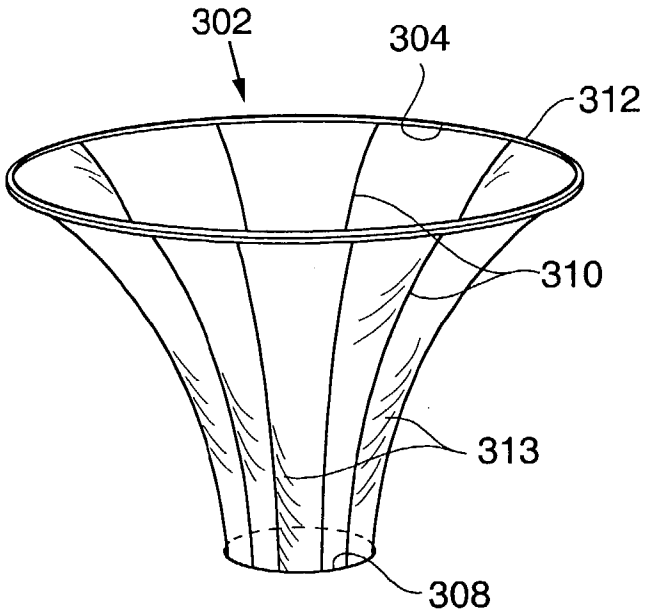

FIG. 18

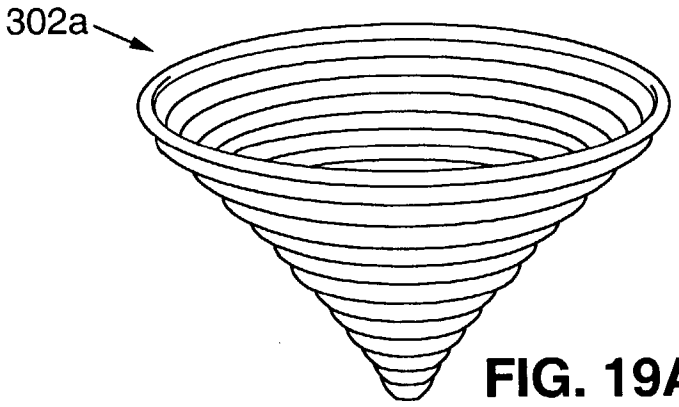

FIG. 19A

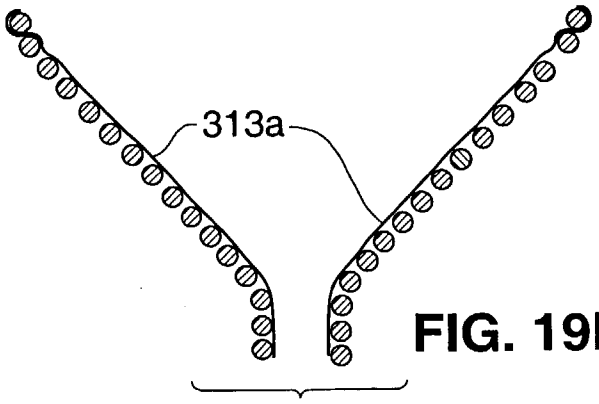

FIG. 19B

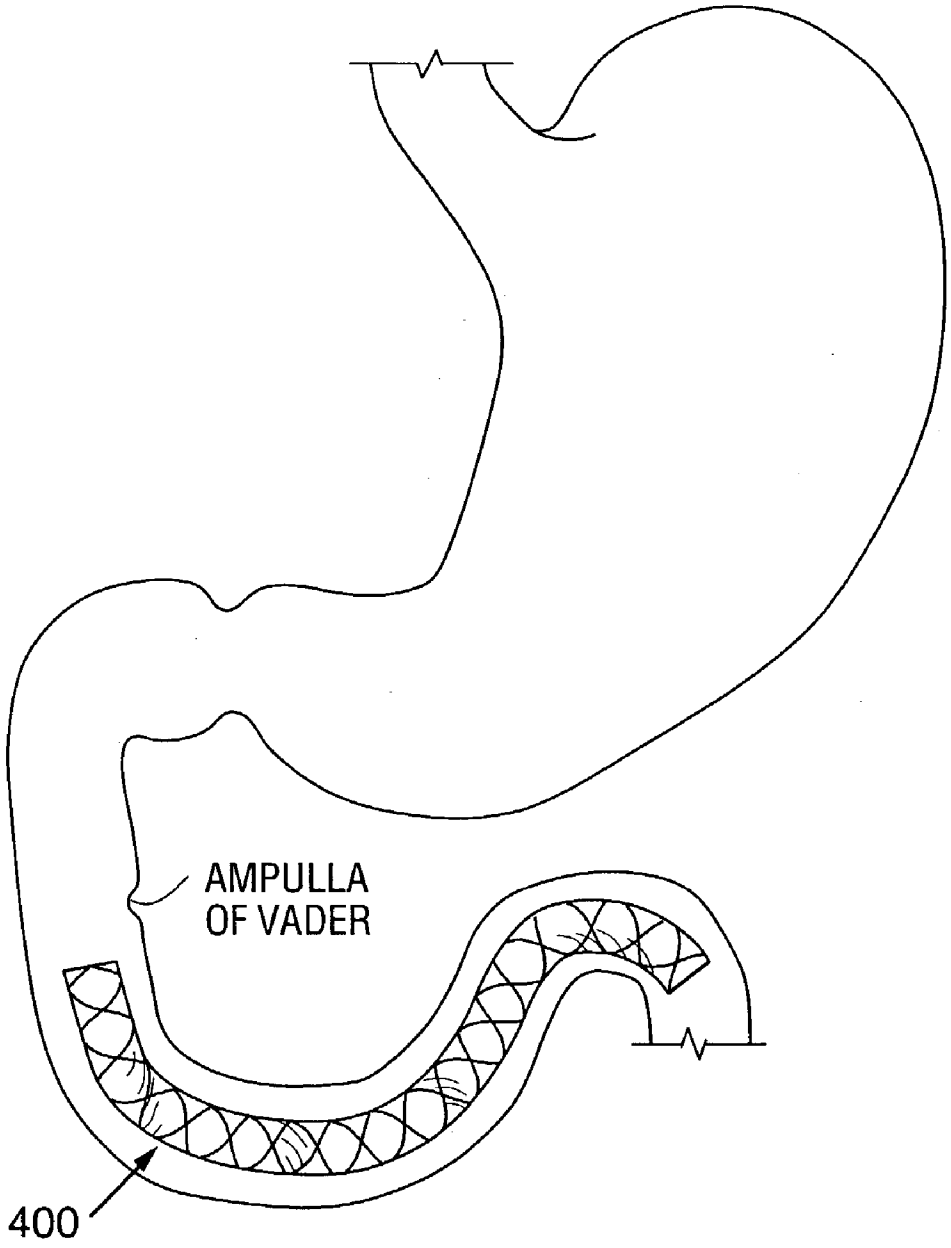

FIG. 20

SATIATION DEVICES AND METHODS

FIELD OF THE INVENTION

[0001] The present invention relates generally to the field of devices and methods for achieving weight loss in humans, and specifically to the use of devices implantable within the human stomach for controlling feelings of hunger.

BACKGROUND OF THE INVENTION

[0002] Various medical approaches are used for controlling obesity. These approaches include diet, medication, and surgical procedures. One of the more successful surgical procedures is the vertical banded gastroplexy or the proximal gastric pouch with a Roux-en-Y anastomosis. However, known complications are present with each of these procedures and more successful options are desired.

[0003] Other alternatives include implantation of gastric balloons that prevent overeating by occupying volume within the stomach. Unfortunately, gastric balloons can migrate down the GI tract, causing obstruction and thus necessitating removal.

[0004] It is therefore desirable to provide a successful and minimally-invasive alternative to existing approaches for controlling obesity.

SUMMARY OF THE INVENTION

[0005] A satiation device utilizing principles of the present invention includes a tube having a collapsed position proportioned to permit introduction of the tube into a portion of the stomach. Once positioned within the body, the tube self-expands into contact with the interior of the stomach. During use, food ingested into the stomach passes through the tube. In an alternate embodiment, the tube may be formed of a material that prevents food within the tube from contacting the surrounding walls of the stomach. In one embodiment, the tube may be positionable within the antrum of the stomach. In other alternative embodiments, the device may include a fundal basket which may or may not be attached to a proximal end of an antral tube, and/or a bowel tube which may or may not be attached to a distal end of an antral tube.

[0006] In other alternative embodiments, a small pouch is attached to a cage structure such as a fundal basket and positioned at the proximal end of the stomach. In other alternative embodiments, this pouch may be provided without a cage structure and is independently secured against the proximal stomach wall by endoscopy guided sutures or other means.

BRIEF DESCRIPTION OF THE DRAWINGS

[0007] **FIG. 1** is a schematic illustration of a human stomach and a portion of the small intestine.

[0008] **FIG. 2** is a plan view of a satiation device utilizing principles of the present invention.

[0009] **FIG. 3** is a plan view of a satiation device similar to that of **FIG. 2**, but including a drug delivery reservoir.

[0010] **FIG. 4A** is a schematic illustration of a stomach, pylorus, and bowel, showing introduction of the device of FIGS. **2** or **3** into the antrum.

[0011] **FIG. 4B** is a schematic illustration similar to **FIG. 4**A, showing the device in position.

[0012] **FIG. 4C** is a schematic illustration similar to **FIG. 4**B, showing withdrawal of the device into a sheath for subsequent removal from the body.

[0013] **FIG. 5** is a schematic illustration similar to the illustration of **FIG. 4**B, showing the position of an alternative device having an antral tube and a bowel tube.

[0014] **FIG. 6** is a schematic illustration similar to the illustration of **FIG. 4**B, showing the position of an alternative device having an antral tube that does not cross the pyloric sphincter.

[0015] **FIG. 7** is a plan view of an antral tube similar to the antral tube of **FIG. 6**, with retaining structures formed into the external surface.

[0016] **FIG. 8** is a plan view of an antral tube similar to the antral tube of **FIG. 6**, with retaining structures formed at the proximal and distal ends.

[0017] **FIGS. 9A and 9B** are plan views of antral tubes similar to the antral tube of **FIG. 6**, with variations of retaining ridges formed on their external surfaces.

[0018] FIGS. **10**A-**10**C are perspective views of satiation devices having antral tubes and fundal baskets.

[0019] FIGS. **10**D-**10**F are partial side elevation views of satiation devices having antral tubes and bowel tubes. Each figure illustrates a portion of the antral tube and a portion of the bowel tube.

[0020] **FIG. 11** is a plan view of a satiation device having an antral tube, fundal basket, and bowel tube.

[0021] **FIG. 12A** is a plan view schematically illustrating insertion of a device such as the devices of FIGS. **10**A-**10**C into the body.

[0022] **FIG. 12B** is a plan view schematically illustrating removal of the device such as the devices of FIGS. **10**A-**10**C from the body.

[0023] **FIG. 13** schematically illustrates an alternative embodiment of a satiation device positioned within a human stomach.

[0024] **FIG. 14** is a side elevation view of a satiation device utilizing a coil configuration.

[0025] **FIG. 15** schematically illustrates the satiation device of **FIG. 15** positioned within a human stomach.

[0026] **FIGS. 16A and 16B** are end views of a tube for a satiation device, such as a fundal basket, antral tube, or bowel tube, illustrating tab members that may be utilized to facilitate tube removal.

[0027] **FIG. 17A** schematically illustrates in vivo positioning of an alternative satiation device utilizing a standalone stomach pouch.

[0028] **FIG. 17B** is a schematic illustration similar to **FIG. 17**A, but further illustrating a cage in combination with the stomach pouch.

[0029] **FIG. 17C** is a schematic illustration similar to **FIG. 17**B, but further illustrating an alignment extension in combination with the stomach pouch and cage.

[0030] **FIG. 18** is a perspective view of a stomach pouch of a type that may be utilized as shown in FIGS. **17A-17**C.

[0031] **FIG. 19A** is a perspective view of an alternative stomach pouch of a type that may be utilized as shown in FIGS. **17A-17**C.

[0032] **FIG. 19B** is a cross-sectional side view of the stomach pouch of **FIG. 19A**.

[0033] **FIG. 20** illustrates in vivo positioning of an alternative satiation device utilizing a duodenal absorption barrier prosthesis.

DETAILED DESCRIPTION

[0034] An anatomical view of a human stomach S and associated features is shown in **FIG. 1**. Stomach S includes a fundus F at its proximal end and an antrum A at its distal end. Antrum A feeds into the pylorus P which attaches to the duodenum D, the proximal region of the small intestine. Within the pylorus P is a sphincter that prevents backflow of food from the duodenum D into the stomach. The middle region of the small intestine, positioned distally of the duodenum D, is the jejunum J.

[0035] Various embodiments of satiation devices are described herein. Many of these devices include an antral tube positionable within the antrum A, and may optionally include a fundal tube connected to the proximal end of the antral tube for placement in the fundus F, and/or a bowel tube connected to the distal end of the antral tube for placement in the duodenum D.

[0036] The device may be modular in that that the various components may be provided separate from one another. In such a modular system, the separate implanted components may be attached to one another within the body during implantation, or certain ones of them may remain unattached to one another even after implantation. Alternatively, the physician may assemble the components to one another just prior to implantation. Modular components are desirable in that they permit the physician to select sizes for each component that are appropriate for the patient. As another alternative, the device may be a unitary device in the sense that the components (e.g. the antral tube, bowel tube and/or fundal basket) are not separately provided but instead form a single-unit implant.

[0037] **FIG. 2** shows a first embodiment of a satiation device **100** utilizing principles of the present invention. Satiation device **100** includes an elongate tubular body **10** having a proximal section **12** and a distal section **14**. Proximal section **12** includes a reduced diameter neck **16**. Distal section **14** preferably has an hourglass profile including a pair of broadened sections **18** and a waisted section **20** between the broadened sections.

[0038] Tubular body **10** is proportioned to be at least partially positioned within the antrum of the stomach such that food moving into the antrum passes through the hollow interior of the tubular body. The tubular body **10** (which will also be referred to as the antral tube) may be made of shape memory materials such as nitinol or other shape memory alloys, or shape memory polymers, and is preferably made of a soft mesh or other framework formed of nitinol or stainless steel wires in combination with a polymeric barrier that prevents ingested food passing through the antral tube **10** from contacting the walls of the antrum. Thus, the polymeric barrier may be a skin formed on the exterior or interior of the mesh, or the mesh may be encapsulated in polymeric material or the polymer may be disposed in the interstices of the mesh. By preventing food from contacting the antrum walls as it passes from mid-stomach to the pylorus, the device prevents modulation of Ghrelin or other satiety controlling factors.

[0039] As shown in **FIG. 3**, the device **100** may optionally include one or more pharmaceutical delivery reservoirs **22**, which are filled with substances known to inhibit release of Ghrelin or other hormones associated with feelings of satiety. Such substances may be chemical or pharmaceutical substances, therapeutic molecules or cells, or genetic material. Each such reservoir **22** may comprise a fluid pocket formed between a first layer of fluid impermeable polymeric material and a second layer of semi-permeable membrane that allows the substances to pass from the reservoirs into the surrounding tissue. Alternatively, the polymeric material used to form the tube may be impregnated with substances useful for maintaining low Ghrelin levels.

[0040] The reservoir or material containing the inhibitive substances may be in a portion of the device that lies within the antrum and/or in a portion that lies within the duodenum, particularly the segment of the duodenum that is proximal of the ampulla of vader, as it is believed that receptors for such substances are present in these areas.

[0041] During implantation, the antral tube **10** is passed into the patient blindly, under radiologic guidance, or under endoscopic guidance. Prior to implantation, the antral tube **10** is preferably packaged in a tubular sheath **26** (see **FIG. 4A**) by compressing the antral tube **10** about its longitudinal axis and inserting it into tubular sheath **26**.

[0042] The sheath **26**, with the antral tube **10** packaged inside, is passed into the stomach via the patient's mouth and positioned within the antrum as shown in **FIG. 4A**. The antral tube **10** is then pushed out the distal end of the sheath **26** using a pushing device **28** inserted into the proximal end of the sheath. The mesh forming the antral tube is preferably constructed so as to be self-expanding, such that the tube **10** springs radially open into an expanded condition upon its ejection from the sheath **26**. When in its expanded condition, the antral tube exerts pressure against the interior surfaces against which it is in contact, so as to create the feeling of satiety and to inhibit Ghrelin release. The radial pressure of the device against the walls also secures the device against the walls of the antrum and prevents it from moving through the pylorus, even in the presence of peristalsis. In an alternative embodiment, the antral section is covered, such as by a polymeric material, shielding the stomach contents from the antrum. This may suppress chemical mediators of the sensation of hunger, such as grhelin production.

[0043] The hour-glass shape of the distal portion **14** is configured such that when the device is implanted, the waist section **20** becomes seated at the pyloric sphincter as shown in **FIG. 4B**. The helps to prevent migration of the device within the stomach, yet because of the self-expanding nature will avoid obstruction of the pylorus. It may be additionally desirable to provide the antral tube to include a valve (not shown) within the waist section **20**, so as to prevent reflux of bile from the duodenum into the antrum.

[0044] Referring to **FIG. 4**C, removal of the device is carried out by inserting sheath **26** into the stomach, and by

extending a grasping instrument such as snare **30** through the sheath. Snare **30** is closed around the neck **16** of the tube **10** and withdrawn, causing the tube **10** to collapse and be drawn into the sheath **26**. Once the tube **10** is stored within the sheath, the sheath is withdrawn from the patient.

[**0045**] It will be appreciated that various other mechanisms may be used to facilitate collapse of the tube for removal. For example, **FIGS. 16A and 16B** show end views of the proximal portion of an alternative antral tube **11** which is provided to include one or more radially extending tabs **13**. Tabs **13** are preferably rounded and smooth to minimize interference with flow through the tube **11**. When the satiation device is to be removed, tabs **13** are drawn inwardly using endoscopic instruments, causing the tube to collapse inwardly.

[**0046**] Referring to **FIG. 5**, an alternate embodiment of satiation device **110** includes an antral tube **10***a* similar to that of the previous embodiments, but additionally includes a small diameter bowel tube **32** at its distal end. The bowel tube **32** is preferably formed of a combination of mesh and polymer as described in connection with antral tube **10** of **FIG. 2**. It simulates a Roux en Y, or gastric bypass, procedure by keeping food away from the proximal portion of the small bowel (i.e. away from the duodenum or the jejunum and duodenum, the portions of the small intestine at which most carbohydrates and proteins are absorbed by the body). This in turn prevents absorption of food by the proximal portion of the small bowel, and thus reduces the total amount of food absorbed by the body.

[**0047**] The bowel tube **32** is smaller in diameter than the antral tube **10***a,* and is of a diameter that will allow it to press gently against the walls of the small bowel. It must also be sufficiently flexible to pass posteriorly and distally into the second portion of the duodenum without damaging the mucosa. This may be facilitated by the use of a guidewire that is first introduced with an endoscope.

[**0048**] The bowel tube **32** may be a soft wire mesh (formed, for example, of shape memory alloys, nitinol, stainless steel alloys, stainless steel or polymers including shape memory polymers) covered with a polymer to prevent food and digestive juices from contacting the mucosa of the duodenum. Tube **32** may be provided to have a valve **34** at its distal end, which functions to prevent reflux of intestinal contents. The bowel tube includes an opening **33** to ensure that the ampulla of vader is not obstructed.

[**0049**] Delivery of the device **110** into, and its removal from, the stomach may be performed under radiological or endoscopic guidance as described with respect to the prior embodiments. A conventional guide wire may also be used to facilitate positioning of the bowel tube **32**. If a guide wire is used, it is first placed into the duodenum using endoscopy or radiology to guide the wire placement. The bowel tube **32** and antral tube **10***a* are then placed over the wire and guided over the wire into the duodenum or jejunum to the desired location. Next, the guide wire is removed. The small bowel tube position is maintained by bearing against the proximal end of the antral tube using a pushing instrument (such as the pusher **28** shown in **FIG. 4A**), while the covering sheath is withdrawn. As they are released from the sheath, the small bowel tube and the antral tube deploy and expand into contact with the antrum walls.

[**0050**] In a modular version of the device **110**, the antral tube **10***a* and bowel tube **32** may be provided separately. Components of a modular system may be attached to one another pre-operatively or after each component has been positioned within the body.

[**0051**] An alternative form of a satiation device **120** may be configured, as shown in **FIG. 6**, to have an antral tube **10***b* that is positioned only within the antrum and that does not cross the pyloric sphincter. As with the prior embodiments, the satiation device **120** is preferably self-expanding and may be formed of a soft nitinol, shape memory polymer, or stainless steel mesh, preferably in combination with a polymer. Outward radial pressure between the antral tube and the stomach walls prevent the tube from moving distally through the pylorus, even in the presence of peristalsis. Additional mechanisms may be provided to prevent movement of the tube towards the fundus and/or pylorus. For example, soft and directional "fish scale" type structures **36** may be formed on the mesh or polymer on the exterior surface of the antral tube **10***b* as shown in **FIG. 7**. The figure shows the scales oriented to prevent movement of the device towards the pylorus, but it should be appreciated that movement towards the fundus may be prevented by orienting the scales in the opposite direction.

[**0052**] A plurality of hooks **38** may be formed on the proximal and/or distal ends of the antral tube **10***b,* as shown in **FIG. 8**. These hooks gently attach to the mucosa of the antrum and prevent movement in the proximal and/or distal direction. Such hooks should be sufficiently small as to not penetrate the submucosa or muscularis.

[**0053**] **FIGS. 9A and 9B** illustrate the use of ridges formed on the exterior of the antral tube for preventing migration of the tube. The ridges may be formed in a variety of configurations, such as the helical ridges **40** shown on the **FIG. 9A** embodiment or the rings **42** shown in the **FIG. 9B** embodiment. These same mechanisms for preventing movement may be applied to the bowel tube as well, as described with respect to FIGS. **10D-10F**.

[**0054**] A basket structure may extend from the proximal end of the antral tube for positioning in the fundus. Referring to FIGS. **10A-10C**, a fundal basket **44***a,* **44***b,* **44***c* may be formed of a mesh provided with large openings sized to permit food to readily flow through the fundal basket into the antral tube. Unlike the mesh of the antral tube, the mesh of the fundal basket is preferably not covered with a polymeric skin or coating. The fundal basket is mechanically connected to the antral tube, such as by spring members **46***a* **(FIG. 10A)**, elongate struts **46***b* **(FIG. 10B)**, mesh **46***c* **(FIG. 10C)** or equivalent structural components. The proximal end of the fundal basket rests against the walls of the fundus of the stomach and thereby functions to prevent migration of the device within the stomach. An embodiment utilizing an antral tube and fundal basket may be provided in a modular form—in which the antral and fundal components are separate from one another and then attached to one another pre-operatively or following implantation in the body. Alternatively, the antral tube and fundal basket may comprise a unitary device.

[**0055**] Similar attachment mechanisms may be used to attach a bowel tube to an antral tube in embodiments having these components, regardless of whether a fundal basket is used. For example, the bowel section **132***b* and antral section **110***b* may be connected with one or more longitudinal struts, as shown in **FIGS. 10E and 10F**. An alternative embodi-

ment may be provided without an attachment strut, in which case bowel tube **132***a* may be placed separately from antral tube **110***a,* and it may include a neck section **133** (or tabs such as tabs **13** of FIGS. **16A/16B**) at its proximal edge to allow recovery with an endoscopically controlled snare. See **FIG. 10D**. As discussed previously, a device of this type may be provided as a modular or unitary device.

[**0056**] Referring to **FIG. 11**, embodiments having an antral tube **10***b* and a fundal basket **44** may further include a bowel tube **32** attached to the antral tube. As discussed previously with respect to **FIG. 5**, the bowel tube **32** functions to keep food away from the proximal small bowel. The bowel tube **32** may have properties similar to those described with respect to the embodiment of **FIG. 5**.

[**0057**] As with the previous embodiment, the embodiments of FIGS. **10A-10F** and **11** are preferably inserted into the stomach in a collapsed condition, such as within a sheath **26** as shown in **FIG. 12A**. In the case of the FIGS. **10A-10C** embodiments which include antral and fundal tubes only, the distal tip of the antral tube is placed at the pylorus (or across the pylorus as with the **FIG. 2** embodiment) and the sheath is withdrawn. As they are released, the antral and fundal units self-expand and may shorten slightly.

[**0058**] If a small bowel tube is to be included, as in FIGS. **10D-10F**, the tube can be placed under radiological guidance or endoscopic guidance or over a guide wire as described above with respect to **FIG. 5**. As discussed, the antral tube, fundal basket and bowel tube may form parts of a unitary device, or they may be separately provided as modular components. In a modular device, each of the three components may be separately provided and then attached to one another prior to implantation or after the components have been positioned within the body. In another form of modular device, some but not all of the components (e.g. the fundal basket and antral tube, or the antral tube and bowel tube) may comprise a unitary device, and an additional modular component may be provided for subsequent attachment to the unitary device either before or after implantation.

[**0059**] Referring to **FIG. 12B**, removing the device, whether it includes only an antral tube, fundal and antral tubes, or fundal, antral and small bowel tube, is accomplished by extending a sheath **26** into the stomach, extending a grasping instrument through the sheath, grasping the proximal end of the device and pulling the tube into the sheath causing it to collapse. If a wire snare loop is to be used as the grasping instrument, the snare is placed around a neck (such as neck **16** shown in **FIG. 2** or a similar neck **17** at the proximal end of the fundal basket as shown in **FIG. 12B**) to grasp the device. Engagement with the snare loop would assist in collapsing the tube as the snare is tightened around the neck and withdrawn into the sheath **26**. Alternatively, as described with respect to **FIGS. 16A and 16B**, the proximal end of the tube may include tabs **13** that are pulled radially inwardly using an endoscopic instrument to facilitate collapse of the device.

[**0060**] Another alternative satiation device **130** is shown in **FIG. 13**. As with the prior devices, device **130** includes an antral tube **10***c* positionable within the antrum to minimize direct contact between food entering the antrum and the walls of the antrum. The antral tube **10***c* may be formed of a combination of soft polymeric material as well as reinforcing members formed of nitinol, stainless steel, and/or polymer. In the embodiment shown in **FIG. 13**, device **130** is formed of a polymeric sleeve **48** with nitinol struts **50** embedded in the sleeve material. Stainless steel or polymeric reinforcing bands **52** extend longitudinally along the interior walls of the tubular member. Inflatable reservoirs **54** formed of a soft elastic polymer are positioned on the exterior of the tubular sleeve **48**. A fill tube **56** is fluidly coupled to the reservoirs. After the device is positioned within the antrum, reservoirs **54** are filled with saline to expand the sleeve **48** into contact with the antrum walls, so as to hold the device in place within the antrum. Fill tube **56** may detach from the reservoir following inflation using the saline. To prevent saline leakage, a one-way valve (not shown) may be located within the reservoir at the point of attachment of the fill tube.

[**0061**] Another alternative embodiment of a satiation device **200** is shown in **FIGS. 14 and 15**. Device may be formed of a wire member coiled to create a stent-like device. The coil may be contoured to match the contours of interior lumen wall, such as by forming the coil of a shape memory material such as nitinol or polymers, and shape setting the material to the desired shape. Device **200** has a proximal portion **202** positionable in the antrum, and a distal portion **204** that may be positioned in the duodenum bulb or further within the small intestine. The pitch of the coil is selected to give the device **200** a desired strength and flexibility.

[**0062**] A straight portion **206** connects the proximal and distal portions **202, 204**. Straight portion **206** is positionable within the pyloric sphincter. Under normal conditions, the pyloric sphincter remains closed until the stomach is ready to evacuate its contents into the duodenum. Straight portion **206** is beneficial in that it provides structure connecting proximal and distal portions **202, 204** while allowing the pyloric sphincter to correctly perform its normal function.

[**0063**] Although a preferred material for the device **200** is wire, it should be noted that a variety of alternative materials may be used for this purpose. For example, device **200** may be formed of ribbons of material, or it may be formed from a metallic sheet, or its pattern may be cut from tubing.

[**0064**] Yet another embodiment of a satiation device **300** is illustrated in **FIG. 17A**. Device **300** includes a tubular pouch **302** that is positioned in the proximal region of the stomach. Pouch **302** includes a proximal end that is preferably positioned to be slightly proximal of the gastro_o-esophageal junction as shown. The walls of the pouch preferably taper inwardly from the proximal end towards the distal end. A proximal opening **304** of, for example, approximately 25 to 50 mm in diameter is located at the proximal end, and a distal opening **308** having a diameter of approximately 6-12 mm is formed at the distal end. The proximal opening **304** is preferably placed into alignment with the esophagus, and the distal opening **308** opens into the interior of the stomach.

[**0065**] Because of its small volume (which may be on the order of approximately 30 cc-50 cc in volume), the pouch functions to limit the amount of food that can be consumed at one time. Food ingested by the patient remains in the pouch until digestive enzymes have broken it down sufficiently for it to pass through the distal opening **308**.

[**0066**] The pouch is preferably self-expanding and may take a variety of forms. For example, referring to **FIG. 18** it

may be formed of struts **310** or a mesh formed of nitinol, stainless steel, polymer (including shape memory polymer). A ring **312** is attached to the struts/mesh at the proximal end of the device, and also may be formed of nitinol, stainless steel, polymer (including shape memory polymer). The exterior or interior of the pouch covered with a material **313** will prevent passage of food through the sides of the pouch. One example of such a material is a polyester material such as the polyester sold by the DuPont Company under the trademark Dacron.

[**0067**] **FIGS. 19A and 19B** show another example of a pouch **302***a*. Pouch **302***a* is formed of a shape memory coil that has been heat set to a funnel shape. Dacron polyester or other material **313***a* **(FIG. 19B)** may optionally cover the interior or exterior walls of the coil, although the coil may itself be sufficiently small as to prevent migration of food to the surrounding stomach walls. The material **313***a* may be pinched between proximal-most coil **312***a* and its adjacent coil as shown in **FIG. 19**B, so as to hold it in place.

[**0068**] The pouches **302, 302***a* may be provided with a proximal-to-distal dimension that is fairly long (e.g. on the order of approximately 2.5-5.0 cm) and that thus gives the pouch a funnel shape as shown in **FIGS. 18 and 19**A. However, a variety of alternative shapes may be used for the pouch. For example, the pouch may have a much shorter proximal-to-distal dimension and thus take the shape of a shallow saucer with a small hole on its bottom surface.

[**0069**] The stomach pouch may be used alone or in combination with other components. If used without additional components, the proximal end of the pouch (e.g. ring **312** of pouch **302** or ring **312***a* of pouch **302***a*) may serve as a sewing ring that is attached by sutures to the interior stomach walls. The suture may pass through the material **313, 313***a* (see **FIG. 19B**) to strengthen the connection between the stomach wall and the device. Alternatively, the pouch may be used as a standalone device without sutures—in which case it may be held in place by the radial expansion forces of the struts, mesh or coils.

[**0070**] The stomach pouch may alternatively be one portion of a larger satiation device. For example, referring to **FIG. 17**B, the proximal portion of the pouch (such as ring **312** of the pouch of **FIG. 18** or the upper coil **312***a* of the pouch of **FIG. 19A**) may be connected to the proximal end of a larger cage structure **314**. Cage **314** extends from the esophagus to the proximal portion of the antrum, and may be similar to the fundal baskets described above. It may be a large stent-like structure preferably formed of self-expanding material, such as stainless steel or a shape memory material such as nitinol or polymer. Cage **314** functions primarily to distend the stomach to create a feeling of satiety. As shown, the pouch **300** is suspended into the interior of cage **314**.

[**0071**] Additionally, the pouch (as used with or without cage **314**) may also be attached at its proximal end to an alignment extension **316**. Referring to **FIG. 17**C, alignment extension **316** is a tubular stent portion that extends into the esophagus. In one embodiment, extension **316** may be approximately 5 cm in length. It functions primarily to keep the proximal opening of the pouch aligned with the esophagus—so that food passing through the esophagus passes easily into the pouch.

[**0072**] Finally, an enclosed bypass tail (not shown) may extend from distal opening **308** of the pouch through the pylorus into the small bowel to simulate a stomach bypass procedure. The structure of the tail may be similar to the bowel tube described with respect to **FIG. 5**.

[**0073**] The stomach pouch and associated components may be implanted and removed using procedures of the type described with respect to previous embodiments. In embodiments in which the stomach pouch includes the cage, alignment extension, and/or bypass tail, the components may be implanted simultaneously as a single device. Alternatively, they may be segmented for separate implantation and for subsequent suture attachment to one another once they are within the body.

[**0074**] Another embodiment of a satiation device is illustrated in **FIG. 20**. This satiation device includes a duodenal absorption barrier—an elongate tube **400** that is positionable within the small intestine at a location slightly distal of the ampulla of vader. For example, the barrier may be positioned a distance of approximately 1 cm or more from the ampulla of vader. Positioning of the tube so that it does not contact the ampulla (an opening through which bile passes into the duodenum) is desirable in that it minimizes the chance of irritation and choleocystitus.

[**0075**] The tube **400** is preferably a flexible tube preferably approximately 20 cm or more in length. It may be constructed as described with the satiation devices described above. For example, it may be formed of a self-expandable material such as nitinol, stainless steel, or a shape memory polymer (e.g. oligo-(caprolactone)-dimethacrylate or n-butyl acrylate), and covered with a polymer covering that is resistant to gastric juices (e.g. silicone) and that prevents passage of food byproducts through the walls of the tube.

[**0076**] The tube **400** prevents caloric intake in the small intestine by preventing absorption of food through the walls of the duodenum, and thus functions as an aid to weight loss.

[**0077**] Tube **400** may be delivered and extracted using the techniques described above, and it may be held in place in any of the ways described herein, including sutures, barbs, scales, hooks, or under the outward pressure of the expanded device against the surrounding walls of the duodenum. Tube **400** may be used alone or in combination with components of the type described above.

[**0078**] Various embodiments of satiation device have been described herein. These embodiments are giving by way of example and are not intended to limit the scope of the present invention. It should be appreciated, moreover, that the various features of the embodiments that have been described may be combined in various ways to produce numerous additional embodiments.

We claim:

1. A method of inducing weight loss in a patient, comprising the steps of:

providing a tubular prosthesis expandable from a collapsed position in which the prosthesis has a first diameter to an expanded position in which the prosthesis has a second, larger, diameter;

with the prosthesis in the collapsed position, inserting the prosthesis into a stomach of a patient; and

allowing the prosthesis to self-expand from the collapsed position to the expanded position and into contact with the walls of the stomach.

2. The method of claim 1 wherein the inserting step includes inserting the prosthesis into the antrum of a stomach and wherein the allowing step causes the prosthesis to self-expand into contact with the walls of the antrum.

3. The method of claim 2 wherein the prosthesis includes a waist section, and wherein the method includes causing the waist section to seat at the pyloric sphincter of the stomach.

4. The method of claim 1 wherein the contact between the prosthesis and the walls of the stomach secures the prosthesis in place in the stomach.

5. The method of claim 1 wherein the contact between the prosthesis and the walls of the stomach causes feelings of satiation in the patient.

6. The method of claim 5 wherein the contact between the prosthesis and the walls of the stomach suppresses production in the patient of a chemical mediator of the sensation of hunger.

7. The method of claim 6 wherein the chemical mediator includes Ghrelin.

8. The method of claim 1 wherein the prosthesis includes a self-expanding framework in combination with a fluid impermeable barrier, the fluid impermeable barrier preventing movement of food material through the walls of the prosthesis and into the stomach.

9. The method of claim 1 wherein the prosthesis includes a fluid-permeable reservoir containing a satiety-controlling substance, and wherein the method includes allowing the satiety-controlling substance to pass from the fluid-permeable reservoir into the stomach.

10. The method of claim 1 wherein the prosthesis includes a membrane impregnated with a satiety-controlling substance, and wherein the method includes allowing the satiety-controlling substance to pass from the membrane into the stomach.

11. The method of claim 1 wherein the prosthesis is formed of a shape memory material.

12. The method of claim 11 wherein the shape memory material is nitinol.

13. The method of claim 12 wherein the shape memory material is a shape memory polymer.

14. The method of claim 1 wherein the prosthesis is formed of a mesh.

15. The method of claim 2 wherein the prosthesis includes a valve at the waist section and wherein the method includes preventing reflux of bile from the duodenum into the antrum using the valve.

16. The method of claim 1 wherein the prosthesis includes a proximal end and wherein the method includes the step of inserting a snare into the stomach, placing the snare around the proximal end, and withdrawing the snare to collapse the prosthesis.

17. The method of claim 16 further including the step of further withdrawing the snare to remove the prosthesis from the stomach.

18. The method of claim 1 wherein the inserting step includes the steps of placing the prosthesis in an elongate sheath and inserting the elongate sheath into the stomach, and wherein the allowing step includes withdrawing the elongate sheath from the prosthesis.

19. A method of effecting weight loss in a patient, comprising the steps of:

providing a prosthesis including an antral tube expandable from a collapsed position in which the antral tube has a first diameter to an expanded position in which the antral tube has a second, larger, diameter;

further providing a bowel tube attachable to a distal portion of the antral tube, the bowel tube having a diameter smaller than the second diameter of the antral tube;

with the antral tube in the collapsed position, inserting the antral tube into an antrum of a patient;

allowing the antral tube to self-expand from the collapsed position to the expanded position and into contact with the walls of the atrum;

attaching the bowel tube to the antral tube; and

positioning the bowel tube within the intestine of the patient.

20. The method of claim 19 wherein the attaching step is performed prior to the inserting step.

21. The method of claim 19 wherein the attaching step is performed after the inserting step.

22. The method of claim 19, including the step of causing food ingested by the patient to pass through the antral tube and the bowel tube.

23. The method of claim 23 wherein the step of causing food to pass through the bowel tube includes preventing contact between the food and the portion of the intestine surrounding the bowel tube.

24. The method of claim 19 wherein the antral tube includes a waist section, and wherein the method includes causing the waist section to seat at the pyloric sphincter of the stomach.

25. The method of claim 19 wherein the contact between the antral tube and the walls of the stomach secures the antral tube in place in the stomach.

26. The method of claim 19 wherein the contact between the antral tube and the walls of the stomach causes feelings of satiation in the patient.

27. The method of claim 26 wherein the contact between the prosthesis and the walls of the stomach suppresses production in the patient of a chemical mediator of the sensation of hunger.

28. The method of claim 27 wherein the chemical mediator includes Ghrelin.

29. The method of claim 1 wherein the antral tube is formed of a shape memory material.

30. The method of claim 29 wherein the shape memory material is nitinol.

31. The method of claim 29 wherein the shape memory material is a shape memory polymer.

32. The method of claim 19 wherein the antral tube is formed of a mesh.

33. The method of claim 24 wherein the antral tube includes a valve at the waist section and wherein the method includes preventing reflux of bile from the duodenum into the antrum using the valve.

34. The method of claim 19 wherein the antral tube includes a proximal end and wherein the method includes the step of inserting a snare into the stomach, placing the snare around the proximal end, and withdrawing the snare to collapse the antral tube.

35. The method of claim 34 further including the step of further withdrawing the snare to remove the collapsed antral tube from the stomach.

36. The method of claim 19 wherein the inserting step includes the steps of placing the antral tube in an elongate sheath and inserting the elongate sheath into the stomach, and wherein the allowing step includes withdrawing the elongate sheath from the antral tube, causing the antral tube to spring to the expanded position.

37. A method of effecting weight loss in a patient, comprising the steps of:

providing a prosthesis including an antral tube expandable from a collapsed position in which the antral tube has a first diameter to an expanded position in which the antral tube has a second, larger, diameter;

further providing a fundal basket attachable to a proximal portion of the antral tube;

with the antral tube in the collapsed position, inserting the antral tube into an antrum of a patient;

allowing the antral tube to self-expand from the collapsed position to the expanded position and into contact with the walls of the atrum;

attaching the fundal basket to the antral tube; and

positioning the fundal basket within the fundus of the stomach.

38. The method of claim 37 wherein the attaching step is performed prior to the inserting step, wherein the fundal basket includes a collapsed position and an expanded condition, and wherein the step of positioning the fundal basket in the fundus includes introducing the fundal basket and antral tube into the stomach in their collapsed positions, and allowing the fundal basket and antral tube to self expand into their expanded positions.

39. The method of claim 37 wherein the attaching step is performed after the inserting step.

40. The method of claim 37, including the step of causing food ingested by the patient to pass through the fundal basket and the antral tube.

41. The method of claim 37 wherein the contact between the prosthesis and the walls of the stomach secures the prosthesis in place in the stomach.

42. The method of claim 37 wherein contact between the antral tube and the walls of the stomach causes feelings of satiation in the patient.

43. The method of claim 42 wherein the contact between the prosthesis and the walls of the stomach suppresses production in the patient of a chemical mediator of the sensation of hunger.

44. The method of claim 43 wherein the chemical mediator includes Ghrelin.

45. The method of claim 37 wherein the antral tube is formed of a shape memory material.

46. The method of claim 45 wherein the shape memory material is nitinol.

47. The method of claim 45 wherein the shape memory material is a shape memory polymer.

48. The method of claim 37 wherein the antral tube is formed of a mesh.

49. The method of claim 37 wherein the fundal basket includes a proximal end and wherein the method includes the step of inserting a snare into the stomach, placing the snare around the proximal end, and withdrawing the snare to collapse the fundal basket and antral tube.

50. The method of claim 49 further including the step of further withdrawing the snare to remove the collapsed fundal basket and antral tube from the stomach.

51. The method of claim 37 wherein the inserting step includes the steps of placing the fundal basket in an elongate sheath and inserting the elongate sheath into the stomach, and wherein the allowing step includes withdrawing the elongate sheath from the fundal tube.

52. The method of claim 38 wherein the inserting step includes the steps of placing the fundal basket and antral tube in an elongate sheath and inserting the elongate sheath into the stomach, and wherein the allowing step includes withdrawing the elongate sheath from the fundal basket and antral tube.

53. The method of claim 37 further including the steps of:

attaching a bowel tube to a distal portion of the antral tube; and

positioning the bowel tube within the intestine of the patient.

54. The method of claim 53 wherein step of attaching the bowel tube is performed prior to the step of inserting the antral tube into the antrum of a patient.

55. The method of claim 53 wherein step of attaching the bowel tube is performed after the step of inserting the antral tube into the antrum of a patient.

56. The method of claim 53, further including the step of causing food ingested by the patient to pass through the fundal basket, antral tube, and bowel tube.

57. An apparatus for inducing weight loss in a patient, comprising:

a prosthesis proportioned for placement in the stomach, the prosthesis defining a lumen for passage of food therethrough, the prosthesis self-expandable from a collapsed position to an expanded position, the prosthesis further including

an antral portion sized for positioning within an antrum of a stomach such that exterior walls of the antral portion contact adjacent walls of the stomach,

an intestinal portion sized for positioning within the duodenum such that exterior walls of the intestinal portion contact adjacent walls of the duodenum, and

an intermediate portion extending between the antral portion and the intestinal portion for placement within the pyloric sphincter of the stomach.

58. The apparatus of claim 57 wherein the prosthesis is formed of a self-expandable mesh.

59. The apparatus of claim 58 wherein the mesh is formed of stainless steel.

60. The apparatus of claim 58 wherein the mesh is formed of shape memory material.

61. The apparatus of claim 60 wherein the mesh is formed of nitinol.

62. The apparatus of claim 57 wherein the prosthesis is formed of shape memory polymer.

63. The apparatus of claim 58 wherein the prothesis includes a fluid impermeable barrier on the antral portion.

63. The apparatus of claim 57 wherein the antral portion and the intestinal portions are formed of wire coil, and

wherein the intermediate portion includes an elongate element extending between the antral portion and the intestinal portions.

64. The apparatus of claim 63 wherein the elongate element is a wire.

65. The apparatus of claim 63 wherein the elongate element is a ribbon.

66. The apparatus of claim 63 wherein the elongate element is a suture.

67. A method for inducing weight loss in a patient, comprising the steps of:

providing a pouch having a proximal opening and a distal opening;

positioning the pouch within the stomach of a patient;

placing the proximal opening of the pouch at the distal end of the esophagus and approximately aligning said proximal opening with said distal end;

securing the pouch within the stomach; and

causing food ingested by the patient to flow from the esophagus into the pouch.

68. The method of claim 67 wherein the proximal opening has a diameter that is larger than the diameter of the distal opening.

69. The method of claim 68 wherein the pouch has an approximate funnel shape.

70. The method of claim 67 further including the steps of:

attaching the pouch to a cage; and

positioning the cage within the stomach.

71. The method of claim 70 wherein the step of attaching the pouch to the cage is performed after to the step of positioning the cage within the stomach.

72. The method of claim 70 wherein the step of attaching the pouch to the cage is performed prior to the step of positioning the cage within the stomach.

73. The method of claim 70 wherein the step of positioning the cage within the stomach includes placing a portion of the cage at the fundus of the stomach.

74. The method of claim 67 including the step of positioning an alignment tube in the distal portion of the patient's esophagus, the alignment tube directing food from the esophagus into the proximal opening of the pouch.

75. An apparatus for inducing weight loss in a patient, the apparatus comprising:

a tubular pouch having a proximal opening and a distal opening, the pouch proportioned such that when the proximal opening is positioned at the distal end of a patient's esophagus, the distal opening opens into the proximal region of the stomach such that food from the esophagus passes directly into the proximal opening, passes through the pouch and then into the proximal region of the stomach.

76. The apparatus of claim 75 wherein the proximal opening has a diameter that is larger than the diameter of the distal opening.

77. The apparatus of claim 75 wherein the pouch has an approximate funnel shape.

78. The apparatus of claim 75 wherein the pouch is self-expandable from a collapsed position to an expanded position.

79. The apparatus of claim 78 wherein the pouch is formed of a shape memory material.

80. The apparatus of claim 79 wherein the shape memory material is nitinol.

81. The apparatus of claim 79 wherein the shape memory material is a shape memory polymer.

82. The apparatus of claim 75 wherein the pouch is formed of a coil.

83. The apparatus of claim 75 wherein the pouch is formed of a mesh.

84. The apparatus of claim 75 wherein the pouch includes a sewing ring at the proximal opening.

85. The apparatus of claim 75 further including a cage positionable within the proximal region of the stomach, the pouch attachable to the proximal portion of the cage such that the distal opening extends into the interior of the cage.

86. The apparatus of claim 75 further including an alignment tube positionable within the distal region of the esophagus, the alignment tube including a distal end attachable to the proximal end of the pouch.

87. The apparatus of claim 86 further including a cage positionable within the proximal region of the stomach, the pouch attachable to the proximal portion of the cage such that the distal opening extends into the interior of the cage.

88. A method of inducing weight loss in a patient, comprising the steps of:

providing an elongate tube;

securing the tube within the intestine of a patient, distally of the ampulla of vader; and

causing food passing into the intestine of the patient to pass through the tube, the tube creating a barrier to absorption of the food by the intestine.

89. The method of claim 88 wherein the tube is formed of a shape memory frame covered with a polymeric barrier.

90. The method of claim 89 wherein the shape memory frame is formed of nitinol.

91. The method of claim 90 wherein the shape memory frame is formed of shape memory polymer.

92. A method of inducing weight loss in a patient, comprising the steps of:

providing a tubular prosthesis having a wall surrounding a lumen, the wall formed of a framework that is self-expandable from a collapsed position in which the prosthesis has a first diameter to an expanded position in which the prosthesis has a second, larger, diameter;

with the prosthesis in the collapsed position, inserting the prosthesis into a stomach of a patient; and

allowing the prosthesis to self-expand from the collapsed position to the expanded position and into contact with the walls of the stomach.

93. The method of claim 92 wherein the inserting step includes inserting the prosthesis into the antrum of a stomach and wherein the allowing step causes the prosthesis to self-expand into contact with the walls of the antrum.

94. The method of claim 93 wherein the prosthesis includes a waist section, and wherein the method includes causing the waist section to seat at the pyloric sphincter of the stomach.

95. The method of claim 92 wherein the contact between the prosthesis and the walls of the stomach secures the prosthesis in place in the stomach.

96. The method of claim 92 wherein the contact between the prosthesis and the walls of the stomach causes feelings of satiation in the patient.

97. The method of claim 96 wherein the contact between the prosthesis and the walls of the stomach suppresses production in the patient of a chemical mediator of the sensation of hunger.

98. The method of claim 97 wherein the chemical mediator includes Ghrelin.

99. The method of claim 93 wherein the wall includes a self-expanding framework in combination with a fluid impermeable barrier, the fluid impermeable barrier preventing movement of food material from the lumen through the wall and into the stomach.

100. The method of claim 92 wherein the prosthesis includes a fluid-permeable reservoir containing a satiety-controlling substance, and wherein the method includes allowing the satiety-controlling substance to pass from the fluid-permeable reservoir into the stomach.

101. The method of claim 92 wherein the prosthesis includes a membrane impregnated with a satiety-controlling substance, and wherein the method includes allowing the satiety-controlling substance to pass from the membrane into the stomach.

102. The method of claim 92 wherein the wall is formed of a shape memory material.

103. The method of claim 102 wherein the shape memory material is nitinol.

104. The method of claim 103 wherein the shape memory material is a shape memory polymer.

105. The method of claim 92 wherein the wall is formed of a mesh.

106. The method of claim 93 wherein the prosthesis includes a valve at the waist section and wherein the method includes preventing reflux of bile from the duodenum into the antrum using the valve.

107. The method of claim 92 wherein the prosthesis includes a proximal end and wherein the method includes the step of inserting a snare into the stomach, placing the snare around the proximal end, and withdrawing the snare to collapse the prosthesis.

108. The method of claim 107 further including the step of further withdrawing the snare to remove the prosthesis from the stomach.

109. The method of claim 92 wherein the inserting step includes the steps of placing the prosthesis in an elongate sheath and inserting the elongate sheath into the stomach, and wherein the allowing step includes withdrawing the elongate sheath from the prosthesis.

* * * * *