United States Patent [19]

Kiley

[11] **3,792,692**

[45] **Feb. 19, 1974**

[54] **FUEL INJECTION DEVICE**

[75] Inventor: **Leo R. Kiley**, Groose Pointe Woods, Mich.

[73] Assignee: **Teledyne Industries, Inc.**, Los Angeles, Calif.

[22] Filed: **Mar. 22, 1972**

[21] Appl. No.: **237,089**

[52] **U.S. Cl.** .... **123/32 G**, 123/139 R, 123/139 AB, 123/139 AP, 123/139 AT

[51] **Int. Cl.** **F02m 45/06**

[58] **Field of Search** ..... 123/32 G, 139 R

[56] **References Cited**

UNITED STATES PATENTS

3,435,811	4/1969	Guertler	123/139 R
2,050,134	8/1936	Thomas	123/139 R
2,810,375	10/1957	Froehlich et al.	123/139 R

Primary Examiner—Laurence M. Goodridge
Attorney, Agent, or Firm—Robert C. Hauke et al.

[57] **ABSTRACT**

A fuel injection device for an internal combustion engine provides for a first injection, or preinjection, and a second injection, or main injection, of fuel; the duration of the injections and the interval of time between injections being controlled by a helical groove and helical flat-topped ridge on a rotatable piston. The ridge has upper and lower portions of varying widths to control the duration of the two injections, and the groove has an upper portion of varying width to control the time interval between injections and has a lower portion to terminate the second injection.

10 Claims, 6 Drawing Figures

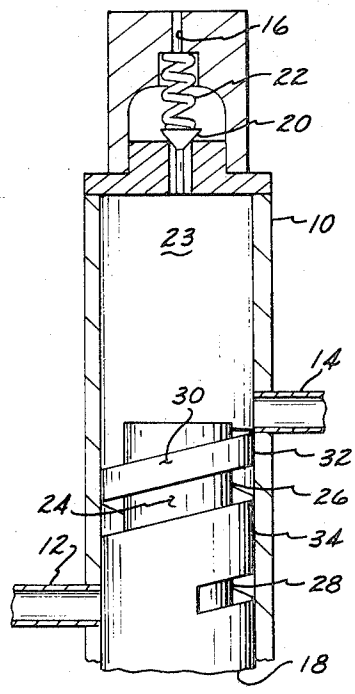

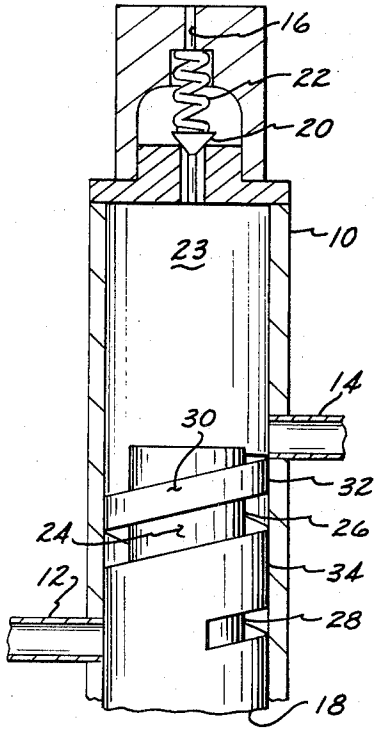

Fig-1

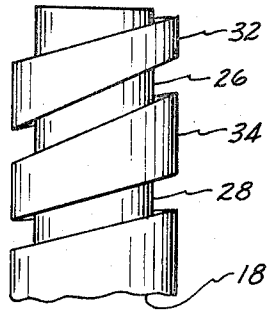

Fig-2

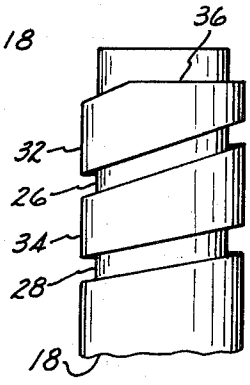

Fig-6

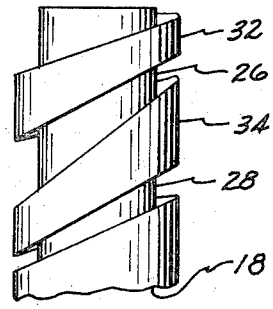

Fig-3

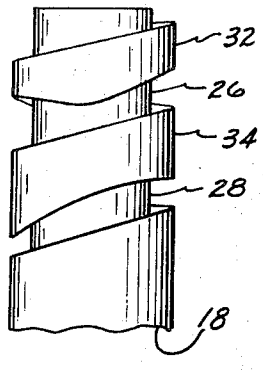

Fig-4

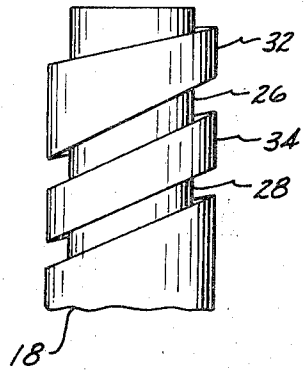

Fig-5

FUEL INJECTION DEVICE

BACKGROUND OF THE INVENTION

It is well known that advantages can be gained, particularly in diesel engines, by dividing the liquid fuel charge entering the combustion chamber into two portions, a preinjection and a main injection. The object of this procedure is to obtain better overall combustion by effecting the ignition in the combustion chamber of a relatively small fraction of the fuel before the bulk of the fuel is introduced into the combustion chamber. Many devices have been suggested for a single fuel injection and many of these have been modified to provide for a preinjection.

One means of controlling a single fuel injection from a cylinder involves forming a helical groove in the surface of a rotatable piston in the cylinder. Upon upward movement of the piston, the groove permits the relief of fluid pressure in the cylinder by registering with a spill port. Upon further upward movement of the piston, the piston surface blocks the spill port to develop fluid pressure in the cylinder, which pressure opens a valve in a manner to provide for the injection. The injection is terminated when upward motion of the piston causes a second groove to register with the spill port. Czechoslavakia Pat. No. 70,704 (1942) shows a variety of such pistons and shows that the duration of the single injection can be controlled by varying, upon rotation of the piston, the width of the piston portion which blocks the spill port during upward movement of the piston. A similar device is shown in French Pat. No. 677,245 and in U.S. Pat. No. 1,854,009.

In modifying the single injection devices to provide for two injections per piston stroke, various means for "interrupting" the single injection have been suggested. For example, Skaredoff, in U. S. Pat. No. 2,306,364, describes a series of generally circumferential grooves in a piston which are generally perpendicular to the direction of movement of the piston. In the latter structure, the grooves are connected with drill passages in order to provide fluid pressure relief when any one groove registers with a spill port. Stockmeyer, in U.S. Pat. No. 1,993,759, describes an auxiliary pressure-controlled reservoir which takes up the fluid between the two injections.

It is an object of the invention to provide a simple and inexpensive device for making first and second injections on each piston pressure stroke without using such involved and cumbersome schemes as auxiliary reservoirs and networks of drill passages.

SUMMARY OF THE INVENTION

The invention deals with a piston actuated fuel injection device for an internal combustion engine, which device provides two sequential fuel injections; a first, or preinjection, and a second, or main injection. The device comprises the usual cylinder and piston assembly wherein the cylinder has a fluid inlet port, a fluid spill port via which fluid under pressure is pushed out of the cylinder, a fluid injection port from which fluid is expelled when the spill port is closed or blocked, and the usual fluid reservoir space in the cylinder above the piston.

The invention takes advantage of the above described helical groove means and provides a combination of piston structures which permit the controlling of one or all of the parameters — the duration of each of the two injections, the time interval between the injections, the point of initiation of the first injection relative to the vertical position of the piston, and the sum of the durations of the two injections.

The foregoing objectives are attained in a fuel injection device which comprises on the piston: (a) a generally helical groove; and (b) a generally helical, flat-topped ridge defined by the groove; and (c) wherein the ridge makes a sufficient number of turns around the piston to form an upper ridge and a lower ridge to close the spill port twice on each pressure stroke of the piston; and (d) wherein the groove makes a sufficient number of turns around the piston to form an upper groove and a lower groove to bring the spill port into fluid communication with the fluid reservoir following each said closing of the spill port. Extension of a single groove to maintain fluid communication between the upper and lower portions of the groove avoids the need for drill passages in the piston.

DESCRIPTION OF THE DRAWINGS

FIG. 1 is a diagrammatic view, partly in cross section, of a piston and cylinder assembly illustrating the present invention;

FIG. 2 is a view of a piston according to the present invention which, upon rotation, effects a change in the duration of the first and second injections;

FIG. 3 is a view of a piston according to the present invention which, upon rotation, effects a change in the duration of the first and second injections and a change in the time interval between said injections;

FIG. 4 is a view of a piston according to the present invention which, upon rotation, first effects an increase in the upper ridge width and a decrease in the upper groove width and, upon further rotation, effects a decrease in the width of the upper ridge and an increase in the width of the upper groove;

FIG. 5 is a view of a piston according to the present invention in which a relatively wide upper ridge is illustrated; and

FIG. 6 is a view of a piston according to the present invention which, upon rotation, effects an increase in the width of the upper ridge without changing the point of initiation of the first injection.

DESCRIPTION OF THE PREFERRED EMBODIMENT

A cylinder **10** (FIG. 1) is provided with an inlet port **12,** a spill port **14,** an injection port **16,** and a piston **18.** Intermediate the spill port **14** and the injection port **16** is a valve **20,** spring loaded by spring **22** to be normally closed. The upper space **23** of the cylinder **10,** above the piston **18,** serves as a fluid reservoir.

The piston **18** is provided with a generally helical groove **24** which, for convenience of description, is divided into an upper groove **26** and a lower groove **28.** The entire groove **24,** however, is in fluid communication with the fluid reservoir **23.** The groove **24** defines a generally helical, flat-topped ridge **30** which, for convenience of description, is divided into an upper ridge **32** and a lower ridge **34.**

The ridges **32** and **34,** as well as the grooves **26** and **28,** as shown in FIGS. **2–6** inclusive, are the same as the ridges and grooves of FIG. **1** except the former are shown as having a variety of widths. In some cases the effective widths of a ridge or groove varies as the piston

is rotated. The changes in widths of ridges and grooves in FIGS. 2–6 inclusive are exaggerated pictorially to make them more evident in the drawings.

The upper ridge 32 of the piston 18 shown in FIG. 6 is provided with a "non-helical" portion; that is, a portion 36 of the edge of the upper ridge 32 is perpendicular to the line of motion of the piston 18.

The terms "upper," "lower," "upward," and the like are used herein for convenience and refer to the usual vertical position of the cylinder and piston (as shown in FIG. 1). It will be apparent, however, that the invention works equally well if the piston stroke is horizontal. In the latter case "upward" would refer to the direction of the piston pressure stroke.

Piston 18 may be driven through its upward, or pressure stroke, and its downward, or return stroke, in the usual manner; that is, by means of a camshaft and piston rod assembly or by any other suitable device. Such devices, as well as devices to rotate the piston, are common knowledge in the art, form no part of the invention and therefore are not shown.

DESCRIPTION OF OPERATION OF OPERATION

The piston 18, as shown in FIG. 1, is part way up its pressure stroke, pushing in front of it fuel which has previously been drawn into the cylinder via inlet port 12. In the position shown, the reservoir 23 and all parts of the groove 24 are in fluid communication with the spill port 14. Thus, when fuel is being pushed out the spill port 14, valve 20 remains closed and no fluid is being injected into the engine combustion chamber (not shown) via injection port 16.

As the piston 18 moves upward, the upper ridge 32 reaches a point where it blocks the spill port 14. Pressure now develops in the cylinder 10, valve 20 opens, and fuel is injected from injection port 16 into the combustion chamber (not shown). Further upward movement of the piston 18 brings the upper groove 26, and hence reservoir 23, into fluid communication with spill port 14 to again cause fluid to flow out spill port 14 accompanied with the closing of valve 20.

Further upward movement of the piston 18 brings the lower ridge 34 opposite spill port 14, blocks the latter port, and effects the opening of valve 20. The second fluid injection then takes place.

Still further upward movement of the piston 18 brings the lower groove 28, and hence reservoir 23, into fluid communication with spill port 14, pressure within the cylinder 10 is relieved, and the valve 20 closes. The piston, upon its return stroke, returns to a position below inlet port 12 via which a new charge of fuel enters the cylinder 10.

Ridge 30 and groove 24 (FIG. 1) each have a constant width and therefore the duration of the first and second injections, as well as the time interval between injections, will not vary as the piston 18 is rotated. However, rotation of the piston (FIG. 1) will cause the point of initiation of the first injection to change because the helical form of the ridge effects a change in the leading (top) edge of upper ridge 32.

With the piston of FIG. 2, rotation of the piston 18 to the right (as shown) effects a later point of initiation of the first injection, a longer first injection (because the width of the upper ridge 32 increases and will block spill port 14 for a longer period of time), and a shorter second injection (because the width of the lower ridge 34 decreases).

With the piston of FIG. 3, rotation of the piston 18 to the right (as shown) effects a later point of initiation of the first injection, a longer first injection, a shorter second injection, and a longer time interval between injections.

With the piston of FIG. 4, rotation of the piston 18 first effects an increase in the duration of the first injection, a decrease in the duration of the second injection, and a decrease in the time interval between injections. Upon further rotation, the duration of the first injection decreases, the duration of the second injection increases, and the time interval between injections increases.

With the piston of FIG. 5, rotation of the piston 18 to the right (as shown) effects a later point of initiation of the first injection, a longer first injection, and an increased total volume of fluid injected in the two injections. In connection with total volume of fluid injected, the total volume injected by the pistons of FIGS. 1–4 inclusive is constant because increases in the width of the upper ridge 32 are compensated for by decreases in the width of the lower ridge 34. In FIG. 5, however, the width of upper ridge 32 increases upon rotation while lower ridge 34 remains constant, giving an increase in the sum of the ridge widths, a longer total injection time, and a greater total volume of fluid injected.

With the piston of FIG. 6, rotation of the piston 18 to the right (as shown) first leaves the point of initiation of the first injection unchanged (because edge 36 is horizontal), increases the duration of the first injection, decreases the duration of the second injection, and increases the total volume of fluid injected during the two injections.

In present practice in internal combustion engines, the first injection is relatively smaller than the second injection; but, as described above, the device of the invention is sufficiently versatile to provide a wide range of ratios of first injection volume to second injection volume, even to the point of making the first injection longer if desired.

It will be apparent to one skilled in the art to which the invention pertains that various changes and modifications may be made therein without departing from the spirit of the invention or the scope of the appended claims.

I claim:

1. In a piston actuated fuel injection device for an internal combustion engine and for making a first and a second fuel injection on each piston pressure stroke, said device comprising: (a) a cylinder provided with a fuel inlet port, a fuel injection port, a fuel spill port, and space for a fluid reservoir; and (b) a piston mounted for reciprocal movement within said cylinder in a manner to draw fuel into said cylinder via said inlet port on its return stroke and, on its pressure stroke, to push said fuel toward said fuel reservoir, to discharge fuel into said spill port when said spill port is open, and to discharge fuel via said injection port when said spill port is closed; the improvement which comprises:

a. a generally helical groove on said piston;

b. a generally helical, flat-topped ridge defined by said groove;

c. wherein said ridge makes a sufficient number of turns around said piston to form an upper ridge portion and a spaced lower ridge portion which is

a continuation thereof to close said port twice on each piston pressure stroke;

d. wherein said groove makes a sufficient number of turns around said piston to form an upper groove portion and a spaced lower groove portion which is a continuation thereof to bring said spill port into fluid communication with said reservoir following each said closing of said spill port; and

e. wherein the rotation of said piston about its longitudinal axis effects a change in at least one of the parameters — the point of initiation of said first injection relative to the vertical position of said piston in said cylinder, the duration of said first injection, the period of time between said first and second injections, the duration of said second injection, and the total volume of fluid injected.

2. The device according to claim **1** in which said upper ridge varies in width, and said rotation effects a change in the duration of said first injection.

3. The device according to claim **1** in which said lower ridge varies in width, and said rotation effects a change in the duration of said second injection.

4. The device according to claim **1** in which (a) said upper ridge varies in width and said rotation effects a change in the duration of said first injection, (b) said lower ridge varies in width and said rotation effects a change in the duration of said second injection, and (c) the sum of the widths of said upper and lower ridges is substantially constant over a range of rotational positions.

5. The device according to claim **1** in which said upper groove varies in width, and said rotation effects a change in the time interval between said first and second injections.

6. The device according to claim **1** in which said upper ridge, said lower ridge, and said upper groove each vary in width; wherein the sum of the widths of said upper and lower ridges is substantially constant over a range of rotational positions; and wherein said rotation effects a change in the duration of said first injection, the duration of said second injection, and the time interval between said injections.

7. The device according to claim **1** in which the upper edge of said upper ridge is perpendicular to the direction of movement of said piston over a range of rotational positions, and said rotation over said range leaves unchanged the point of initiation of said first injection.

8. The device according to claim **1** in which the upper edge of said upper ridge is perpendicular to the direction of movement of said piston over a range of rotational positions and said upper ridge varies in width, and wherein said rotation leaves unchanged the timing of the initiation of said first injection and said rotation effects a change in the duration of said first injection.

9. The device according to claim **1** in which at least one of said ridges, upper and lower, varies in width, and said rotation effects a change in the sum of the duration of said two injections.

10. The device according to claim **1** in which, over a range of rotational positions, the width of said upper ridge increases, the width of said lower ridge decreases, the width of said upper groove remains substantially constant, and the sum of the widths of said upper and lower ridges remains substantially constant.

* * * * *