Nov. 8, 1932. H. W. BATCHELLER 1,886,517

ELECTRIC SWITCH

Filed Sept. 11, 1931

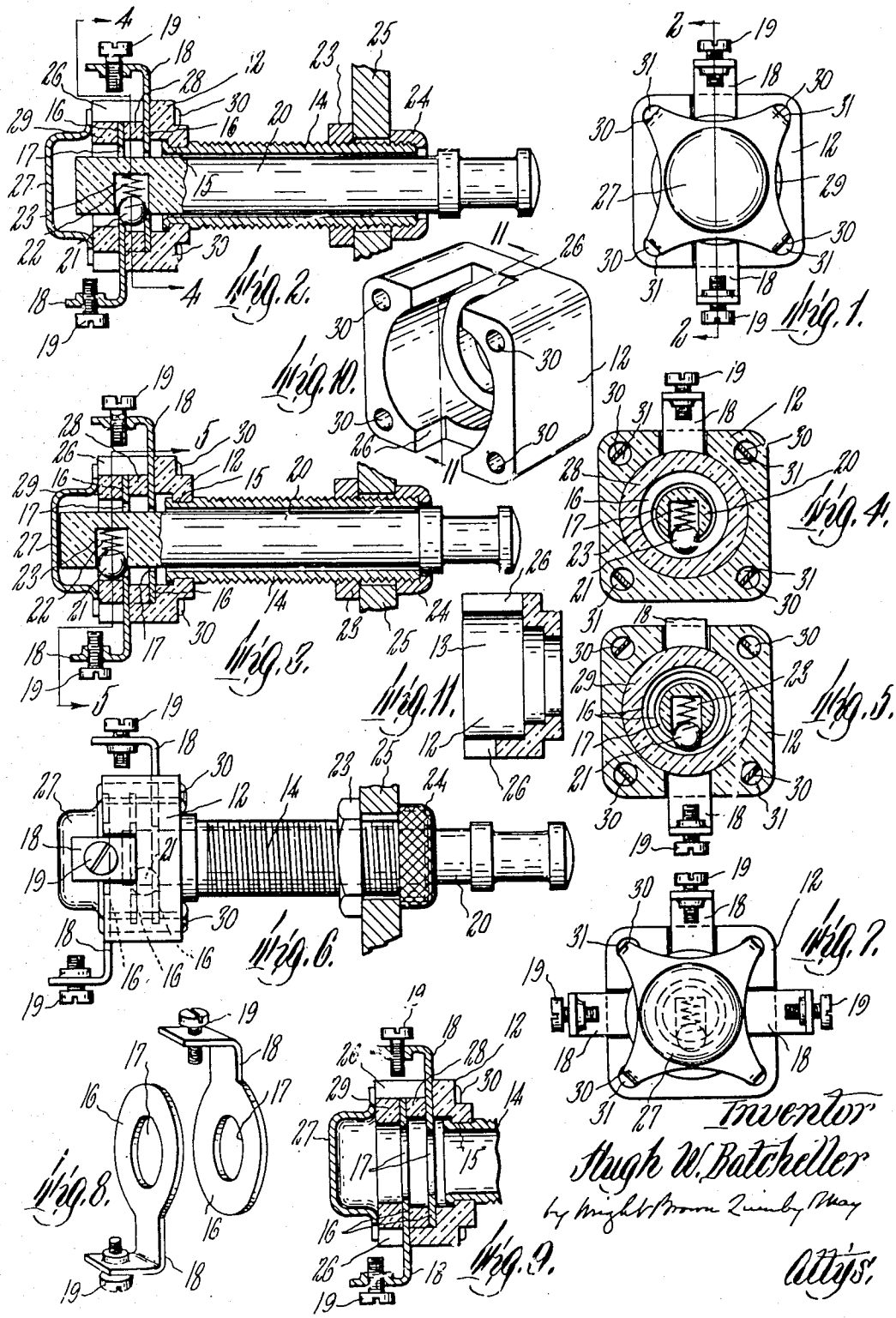

Fig. 2.

Fig. 10.

Fig. 1.

Fig. 3.

Fig. 11.

Fig. 4.

Fig. 5.

Fig. 6.

Fig. 7.

Fig. 8.

Fig. 9.

Inventor
Hugh W. Batcheller
by Wright Brown Quinby & May
Attys.

Patented Nov. 8, 1932 1,886,517

UNITED STATES PATENT OFFICE

HUGH W. BATCHELLER, OF WORCESTER, MASSACHUSETTS

ELECTRIC SWITCH

Application filed September 11, 1931. Serial No. 562,230.

This invention relates to a switch of the push and pull type, and has for its object to provide a switch of simple and durable construction and composed of parts adapted to be quickly assembled, and securely maintained in assembled relation.

Other objects will hereinafter appear.

Of the accompanying drawing forming a part of this specification,—

Figure 1 is an end view of a switch embodying the invention.

Figure 2 is a section on line 2—2 of Figure 1, showing the "on" adjustment of the switch.

Figure 3 is a view similar to Figure 2, showing the "off" adjustment.

Figure 4 is a section on line 4—4 of Figure 2.

Figure 5 is a section on line 5—5 of Figure 3.

Figure 6 is a side view of a switch having a different number of the annular terminals hereinafter described.

Figure 7 is an end view of the switch shown by Figure 6.

Figure 8 shows in perspective and separated from the switch, the two annular terminals shown by Figures 2 and 3.

Figure 9 is a view similar to a portion of Figures 2 and 3, omitting the hand piece.

Figure 10 is a perspective view of the head hereinafter described.

Figure 11 is a section on line 11—11 of Figure 10.

The same reference characters indicate the same parts in all of the figures.

The casing of my improved switch includes a head 12, preferably of insulating material such as bakelite, provided with a recess or chamber 13, best shown by Figure 10. The casing includes also a sleeve 14, fixed to the head at 15 and projecting therefrom.

In the head chamber 13 are fixed by means hereinafter described, a plurality of spaced apart terminals 16, each having an orifice whose margin constitutes an annular inwardly facing contact surface 17. The terminals are insulated from each other in the head by means described later.

The annular contact surfaces 17 are concentric with each other, and each terminal is provided with means for connection with a circuit wire, said means in this instance, including shanks 18 having binding screws 19.

20 designates a cylindrical hand piece longitudinally movable and free to rotate in the sleeve 14, and having a spring pressed bridging conductor, preferably a metal ball 21, backed by a spring 22 in a recess 23 in the hand piece. The conductor 21 is yieldingly pressed outward from the periphery of the hand piece, and adapted to contact with the two annular surfaces 17, simultaneously as shown by Figure 2, and thereby close a circuit, and to contact with only one of said surfaces, as shown by Figure 3, and thereby break the circuit.

The annular contact surfaces 17 are substantially concentric with the hand piece 20, so that they are adapted to cooperate with the conductor 21, when the hand piece is in any position to which it may be rotated in the sleeve. It is unnecessary therefore to provide means for preventing rotation of the hand piece so that the longitudinal movements of the hand piece are not impeded by friction which would be entailed by such means.

The switch may be secured to a supporting structure by any suitable means, said means being preferably associated with the sleeve 14, and embodied in clamping nuts 23 and 24, engaged with a screw thread on the sleeve 14, and adapted to be set up against opposite sides of a supporting member 25, through which the sleeve extends.

The annular contact surface 17 of one of the terminals 16, the one shown at the right in Figures 2, 3 and 8, is preferably contracted and has a diameter so small that when the conductor 21 contacts with the two surfaces 17, outward endwise movement of the hand piece from the position shown by Figure 1 is prevented, because the conductor 21 is so gripped between the contracted contact surface and the wall of the recess 23, that an outward pull on the hand piece cannot cause the conductor 21 to yield inwardly. The contracted contact surface and the conductor therefore constitute automatic means for

locking the hand piece against removal from the casing.

The switch shown by Figures 1 to 5 and 9 controls one circuit and includes two contact members 16.

The switch shown by Figures 6 and 7 controls two circuits and includes three contact members 16, with which the conductor 21 is adapted to cooperate, and three shanks 18, each provided with circuit-engaging means.

The shanks 18 are seated in slots 26 (Figure 10) formed in the wall of the chamber 13. The terminals 16 are clamped in the chamber and the shanks 18 in said slots by means preferably embodied in an end cap 27, fixed to the head and covering the mouth of the chamber, and washers 28 and 29 of insulating material cooperating with said cap in clamping the terminals and their shanks.

As shown by Figures 2 and 3, the washer 28 is interposed between the terminals, and the washer 29 between one of the terminals and the cap 27. Said cap is provided with fastening means, preferably prongs 30 integral with the cap, and inserted in holes 31 in the corner portions of the head, and clinched on one side of the head as shown by Figure 6.

The cap 27 is cupped so that it is adapted to receive the inner end of the hand piece 20. When the switch includes more than two terminals 16, the cap 27 may bear directly on one of the terminals, as indicated by Figure 6.

The head 12 is preferably molded from bakelite in one piece. The shanks 18 bear on the margins of the slots 27 and are insulated by the material of the head and by the washers 28 and 29. The one piece construction of the insulating head enables the switch to be economically manufactured.

I claim:

1. A push and pull switch comprising a casing including a head having in one end an open chamber, and a sleeve fixed to the opposite end of the head and projecting therefrom; a plurality of annular terminals fixed to and insulated from each other in the said chamber and having circular orifices whose margins constitute annular spaced apart contact surfaces concentric with each other and with the sleeves, each terminal having means for connection with a circuit wire; and a hand piece longitudinally movable in the sleeve and chamber and having a spring-pressed bridging conductor movable by the hand piece to contact either with two annular contact surfaces simultaneously, or with only one of said surfaces, one of said annular contact surfaces being contracted so that its diameter is smaller than that of any other contact surface, the arrangement being such that when the bridging conductor contacts with two annular surfaces, one of which is the contracted surface, removal of the hand piece by outward endward movement thereof is prevented.

2. A push and pull switch comprising a casing including a one piece head of insulating material having in one end an open chamber and slots interrupting the continuity of the wall of said chamber, a sleeve fixed to the opposite end of the head and projecting therefrom, a plurality of annular terminals fixed to and insulated from each other in said chamber and having circular orifices whose margins constitute annular spaced apart contact surfaces concentric with each other and with the sleeve, said terminals having shanks projecting through said slots and insulated from each other and provided with circuit wire-engaging means, and a hand piece longitudinally movable in the sleeve and chamber and having a spring-pressed bridging conductor movable by the hand piece to contact either with two annular contact surfaces simultaneously, or with only one of said surfaces.

3. A switch as specified by claim 4, the head being provided with means securing said terminals in the chamber, and the shanks in said slots and insulating the terminals and shanks from each other, said means being embodied in an end cap covering the mouth of the head chamber and having fastening means securing it to the head, and insulating washers cooperating with said cap and slots in confining the terminals in the chamber.

In testimony whereof I have affixed my signature.

HUGH W. BATCHELLER.

CERTIFICATE OF CORRECTION.

Patent No. 1,886,517. November 8, 1932.

HUGH W. BATCHELLER.

It is hereby certified that error appears in the printed specification of the above numbered patent requiring correction as follows: Page 2, line 52, claim 1, for "sleeves" read "sleeve"; and line 89, claim 3, for the claim number "4" read "2"; and that the said Letters Patent should be read with these corrections therein that the same may conform to the record of the case in the Patent Office.

Signed and sealed this 24th day of January A. D. 1933.

M. J. Moore,
Acting Commissioner of Patents.

(Seal)