July 1, 1958 A. S. BADGER 2,841,422

LOW PRESSURE BLOWOUT PREVENTER

Filed June 23, 1955 2 Sheets-Sheet 1

FIG. 1.

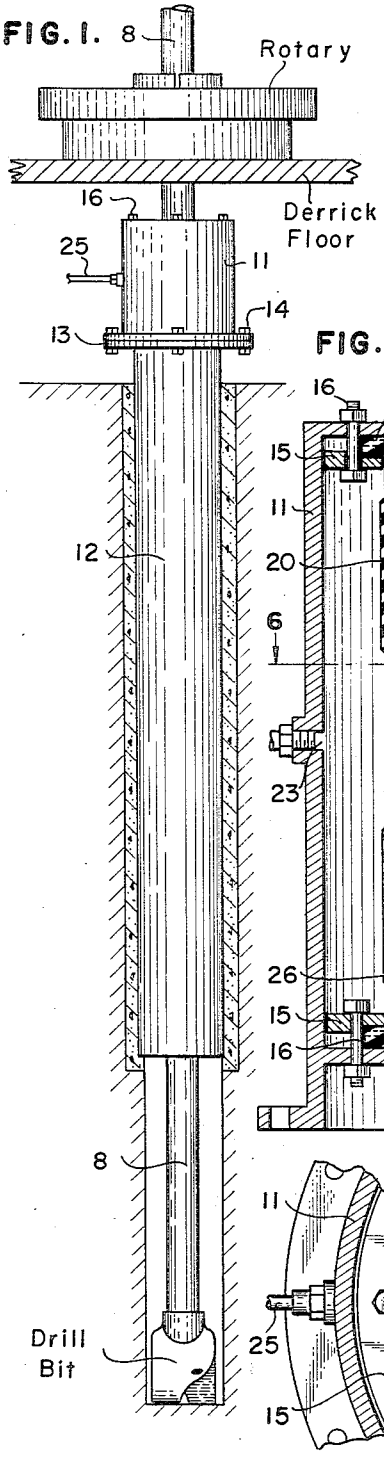

FIG. 2.

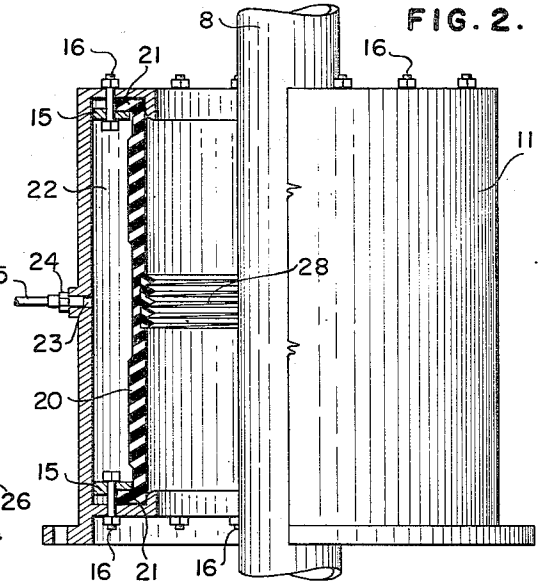

FIG. 5.

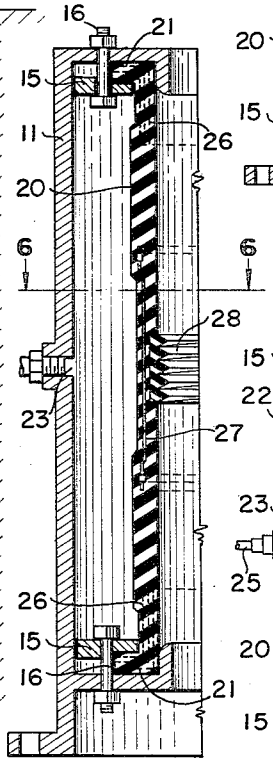

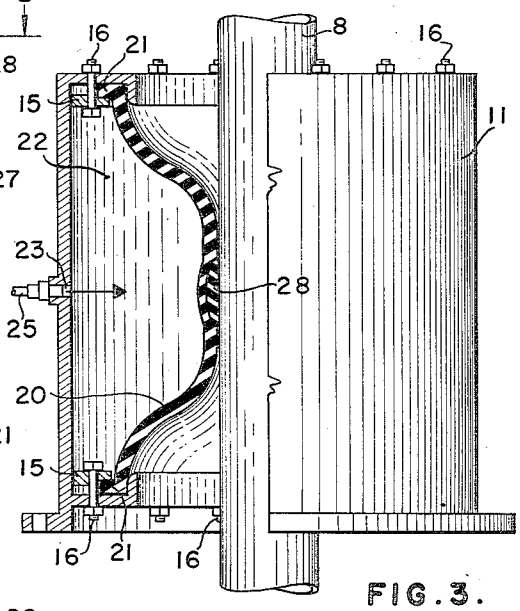

FIG. 3.

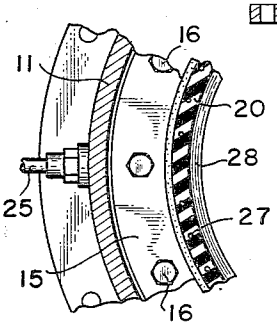

FIG. 6.

INVENTOR.
ALGERNON S. BADGER,
BY
Thomas B. McBride
ATTORNEY.

LOW PRESSURE BLOWOUT PREVENTER

Filed June 23, 1955 2 Sheets-Sheet 2

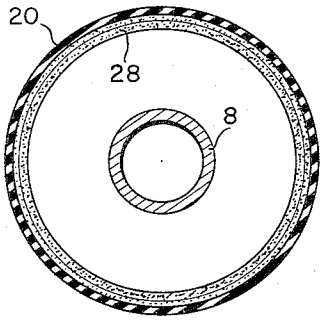

FIG. 4A.

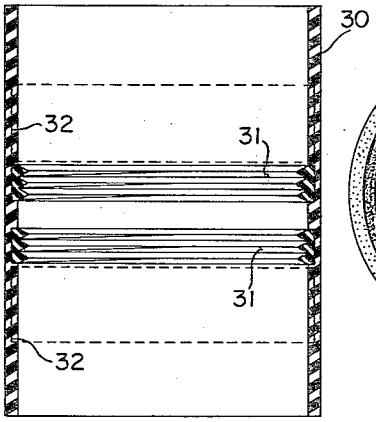

FIG. 7.

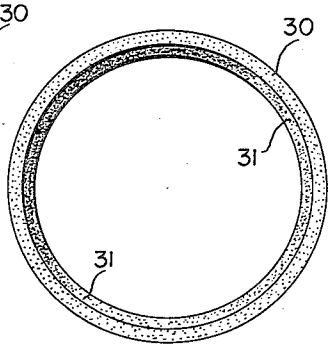

FIG. 8.

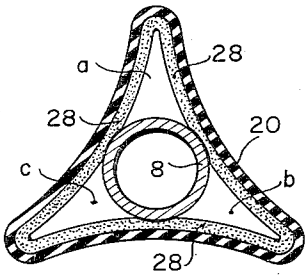

FIG. 4B.

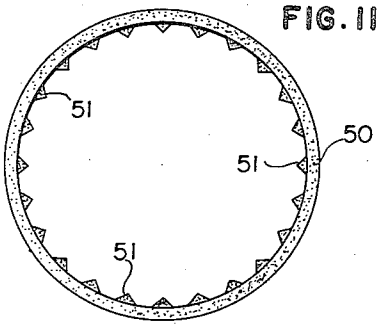

FIG. 11.

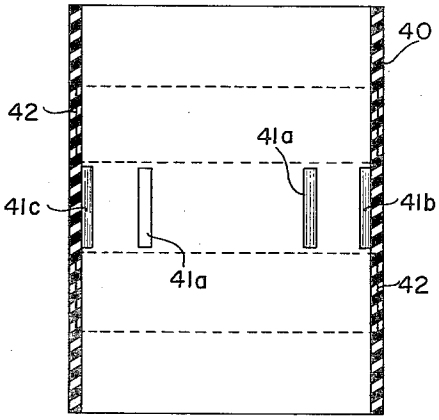

FIG. 10.

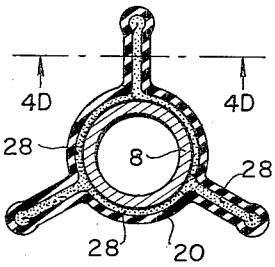

FIG. 4C.

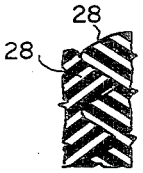

FIG. 4D.

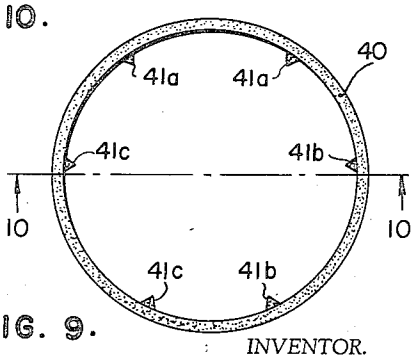

FIG. 9.

INVENTOR.
ALGERNON S. BADGER,
BY
Thomas B. McBride
ATTORNEY.

United States Patent Office

2,841,422

Patented July 1, 1958

1

2,841,422

LOW PRESSURE BLOWOUT PREVENTER

Algernon S. Badger, Houston, Tex., assignor, by mesne assignments, to Esso Research and Engineering Company, Elizabeth, N. J., a corporation of Delaware

Application June 23, 1955, Serial No. 517,473

6 Claims. (Cl. 286—16.5)

The present invention is directed to an improved low pressure blowout preventer for controlling the pressures encountered during the operation of drilling a well. More specifically, the present invention is directed to a blowout preventer in which the sealing means is a deformable sleeve positioned in and fixed to a housing which is attached to the top of a casing such as surface casing which has previously been cemented in place in the ground.

The purpose of the present invention is to form a positive seal around a drill pipe extending through the device and therefore close off the annulus between the casing or borehole and the drill pipe. This purpose is suitably accomplished by forming on the inner surface of the deformable sleeve a series of projections or serrations that will overlap and interlock with one another and fill any voids or openings caused by crimping of the sleeve when the sleeve is forced against the drill pipe which is of a substantial smaller diameter than the deformable sleeve.

In a blowout preventer where a sleeve-type sealing member is used to seal around the drill pipe, the sleeve has to be large enough in its undeformed position to allow a drill bit, for example a 9⅝″ bit, to pass through and when pressure is applied to the outer wall of the sleeve to seal around the drill pipe, such as a 4½″ outside diameter pipe. The sleeve, if it has a constant or smooth inside diameter, will crimp or form folds upon coming in contact with the pipe.

These folds or crimping of the rubber sleeve form openings or slits between the sleeve and the pipe and, therefore, do not provide a positive seal around the drill pipe.

The present invention has overcome this disadvantage as will be seen in the description taken in conjunction with the drawings in which:

Fig. 1 is an elevation, partly in section, illustrating the device of the present invention attached to the top of a surface casing during drilling operation;

Fig. 2 is an enlarged sectional view of the device of Fig. 1;

Fig. 3 illustrates the sleeve member of the device in sealing relationship with the drill pipe;

Fig. 4A is a sectional view of the deformable sleeve member of the present invention in the undeformed position;

Figs. 4B and 4C are sectional views showing the shapes assumed by the deformable sleeve when partially and fully expanded about a section of pipe;

Fig. 4D is an enlarged fragmentary sectional view taken along the line 4*d*—4*d* of Fig. 4C;

Fig. 5 (Sheet 1) is an enlarged fragmentary sectional view of the device of Figs. 1 and 2;

Fig. 6 is a sectional view taken along the line 6—6 of Fig. 5;

Fig. 7 is a showing of another embodiment of the sleeve member of Figs. 1 through 5;

2

Fig. 8 is a top view of Fig. 7;

Fig. 9 is a top view of another embodiment of a sleeve member;

Fig. 10 is a sectional view taken along the line 10—10 of Fig. 9; and

Fig. 11 is a showing of still another embodiment of a deformable sleeve member.

Turning now to the drawings and especially to Figs. 1 through 6, numeral **11** designates a housing which is attached to a surface casing **12** by means such as a flange member **13** and bolts **14**.

Concentrically positioned in housing **11** and fixed to the upper and lower ends of the housing **11** by clamping rings **15** and clamp bolts **16** is a deformable sleeve member **20**. Enclosed by and extending through housing **11** and casing **12** is a drill pipe **8**.

Sleeve member **20** forms at its upper end and its lower end annular shoulders **21** by which the sleeve **20** is secured to the housing **11** by clamping rings **15**.

The wall of the housing **11** and the sleeve **20** form a pressure-tight annulus or chamber **22**. Housing **11** is also provided with a threaded inlet **23** to which is attached by a screw fitting **24** a pressure hose or conduit **25**.

Conduit **25** is attached to a pressure source such as an air compressor not shown.

When it is desired to seal around the drill pipe **8**, such as when excess formation pressures are encountered, pressure is applied to the chamber or annulus **22**, therefore squeezing the deformable sleeve **20** around the drill pipe **8** and sealing of the casing annulus below the sleeve member **20** as illustrated in Fig. 3. A possible first position and a closed position taken by the deformable sleeve member **20** upon applying pressure to the chamber **22** are illustrated in Figs. 4B and 4C. It may be understood that sleeve **20** may assume any of several positions or shapes upon contacting the pipe **8**.

Turning now to Figs. 5 and 6, the sleeve member **20** is reinforced at its clamping ends by reinforcing means **26** such as cord or fabric which may be nylon ribbons and the like embedded in and vulcanized to the rubber. These reinforcing members are embedded in the annular shoulders **21** and also extend a substantial distance into the wall of the sleeve member **20**. This allows a stiffening and strengthening effect for clamping of the sleeve to the housing.

Sleeve member **20** is also provided with a plurality of vertically extending reinforcing members shown as short lengths of cable **27** which are also embedded in the wall of the sleeve **20** and equally spaced apart in the wall of the sleeve **20**.

The inner surface of the sleeve **20** defines at a point midway between its upper and lower ends a plurality of inwardly projecting annular serrations or saw tooth projections **28**. These serrations are shown as triangular in cross section but may be formed in various patterns as desired.

The serrations or projections **28** form part of the inner wall of the sleeve member **20** but are of a more pliable consistency than the rest of the sleeve **20**. The serrations **28**, being of a softer or more pliable nature than the rest of the sleeve member, have a tendency to be squeezed or mashed out more readily when coming into contact with the pipe and overlapping and interlocking with one another, therefore filling up any cracks or openings formed by folding or crimping the sleeve member **20** when it contacts the pipe as is illustrated more clearly in Figs. 3 to 4C. Figs. 4B and 4C illustrate one of a number of positions that the deformable sleeve **20** may assume when fluid pressure is applied to the chamber **20**.

As shown in Fig. 4B, the sleeve **20** has contacted the pipe **8** at three points and has assumed a cross-

sectional triangular configuration and leaving openings such as *a*, *b*, and *c* between the sleeve **20** and the pipe **8**. As more pressure is applied to chamber **22**, the walls forming the openings *a*, *b*, and *c* are folded together until they assume the position as shown in Fig. 4C. The serrations **28** of the walls upon being closed together, being somewhat triangular in cross-section and having rather sharp crests, tend to slip somewhat and overlap and interlock with one another. The serrations **28**, being also of a softer or more pliable composition than the wall of the sleeve **20**, are mashed together and against the pipe **8** and, therefore, completely close any opening between the sleeve **20** and the pipe **8** in the first folded position.

The sleeve **20** may, upon being pressurized, initially contact the pipe **8** at two or maybe four points and, if so, the openings formed, such as shown in Fig. 4B, are closed in the same manner as described.

The embodiment of Figs. 7 and 8 shows a sleeve member **30** provided with two spaced-apart sets of annular internally projecting serrations **31**. In this embodiment the wall of the sleeve member **30** is reinforced immediately above and below the serrations **31** by reinforced means **32** such as fabric which may be nylon or the like.

The embodiment of Figs. 9 and 10 shows a deformable sleeve member **40** provided with equally spaced-apart sets of vertically extending serrations **41***a*, **41***b*, and **41***c*. This embodiment, as in Figs. 7 and 8, is also provided with reinforcing means **42** which are embedded in the wall of the sleeve member **40** immediately above and below the serrations. It will be understood that the sleeve **40** of Figs. 9 and 10 is formed so that when it is pressurized it folds around a pipe arranged therein such that serrations **41***a* come together, as do serrations **41***b* and **41***c* and seal the slits formed by the sleeve as previously explained.

Fig. 11 is similar to the showing of Figs. 9 and 10 but with the vertical serrations equally spaced apart. Sleeve **50** is provided with vertical serrations **51** which are similar to the serrations of Figs. 9 and 10 but are equally spaced apart. Sleeve **50** functions to seal around a section of pipe substantially the same as the sleeves of Figs. 1 through 8.

The deformable sleeve member of the various embodiments shown may be constructed of natural or synthetic rubber. Rubbers of the general Hycar type may be used. Other synthetic rubbers which may be employed include Buna, Butyl and the like.

Having fully described and illustrated the present invention, what I claim is:

1. A device for controlling pressures in a well and adapted to seal off a well bore comprising, in combination, a housing adapted to be connected into a surface casing in said well bore and having a vertical axial opening therethrough, a deformable sleeve member arranged in said housing concentric to said axial opening whereby a fluid-tight annular chamber is formed between the inner wall of said housing and the outer wall of said sleeve member, said housing being provided with a fluid inlet communicating with said fluid-tight annular chamber, said deformable sleeve member having formed on its inner wall a plurality of inwardly projecting annular serrations, said wall of said deformable sleeve member being internally reinforced adjacent said serrations and at each of its ends, said deformable sleeve member having a non-deformed position whereby said vertical axial opening is unobstructed and a maximum deformed position whereby said axial opening is completely closed.

2. A device in accordance with claim 1 in which the continuous inwardly projecting annular serrations are formed of a more pliable composition than said wall of said deformable sleeve member.

3. A device for controlling pressures in a well and adapted to seal off a well bore comprising in combination a tubular housing adapted to be connected into a surface casing in said well bore, a deformable sleeve member having an opening therethrough mounted in said housing and forming with said housing a pressure-tight annular chamber, said housing being formed to provide a fluid inlet communicating with said annular chamber, said sleeve member being provided with a plurality of internally projecting serrations on its inner wall intermediate its upper and lower ends, said serrations being of a greater deformability than said sleeve member whereby when said annular chamber is pressurized said sleeve is deformed and the opening through said sleeve is sealed.

4. A device in accordance with claim 3 in which said deformable sleeve member is internally reinforced at each end and adjacent said serrations.

5. A device in accordance with claim 4 in which the internally projecting serrations are annularly extending.

6. A device in accordance with claim 4 in which the inwardly projecting serrations are spaced apart and vertically extending.

References Cited in the file of this patent

UNITED STATES PATENTS

1,930,361	Kilmer	Oct. 10, 1933
1,942,366	Seamark	Jan. 2, 1934
2,258,887	Fortune	Oct. 14, 1941
2,306,160	Freyssinet	Dec. 22, 1942