US005903068A

United States Patent [19]

Suzuki

[11] Patent Number: 5,903,068

[45] Date of Patent: May 11, 1999

[54] **ELECTROACOUSTIC TRANSDUCER**

[75] Inventor: **Kazushi Suzuki**, Shizuoka, Japan

[73] Assignee: **Star Micronics Co., Ltd.**, Shizuoka, Japan

[21] Appl. No.: **08/788,184**

[22] Filed: **Jan. 24, 1997**

[30] **Foreign Application Priority Data**

Jan. 25, 1996 [JP] Japan 8-032776

[51] **Int. Cl.**[6] **H04R 1/02**

[52] **U.S. Cl.** **310/12**; 29/594; 340/391.1; 381/385; 381/395

[58] **Field of Search** 310/341, 346, 310/363, 312; 29/594; 340/391.1; 381/385, 395, 150

[56] **References Cited**

U.S. PATENT DOCUMENTS

4,687,633	8/1987	Miyafuji et al.	420/481
4,926,022	5/1990	Freedman	219/121.63
5,002,619	3/1991	Tsuda et al.	148/11.5 R
5,287,084	2/1994	Sone	340/388.4
5,371,943	12/1994	Shibata	29/827
5,451,813	9/1995	Kazutaka	257/676
5,521,430	5/1996	Shibata	257/676
5,572,059	11/1996	Walker et al.	257/448
5,605,582	2/1997	Inoue et al.	148/320
5,625,700	4/1997	Sone	381/192
5,672,550	9/1997	Tsuji et al.	437/219
5,691,241	11/1997	Kazutaka	437/206

Primary Examiner—Thomas M. Dougherty

Attorney, Agent, or Firm—Sughrue, Mion, Zinn, Macpeak & Seas, PLLC

[57] **ABSTRACT**

An electroacoustic transducer has lead terminals formed of an alloy consisting of 32 to 55% by weight of Ni and a remainder essentially of Fe, and having a crystal grain size of 7.0 or greater. In an electroacoustic transducer, both coil terminals of the coil are connected to the associated lands of the lead terminals, and thermal conduction suppressing sections are provided at proximal end sides of lands of the lead terminals for suppressing thermal conduction.

3 Claims, 23 Drawing Sheets

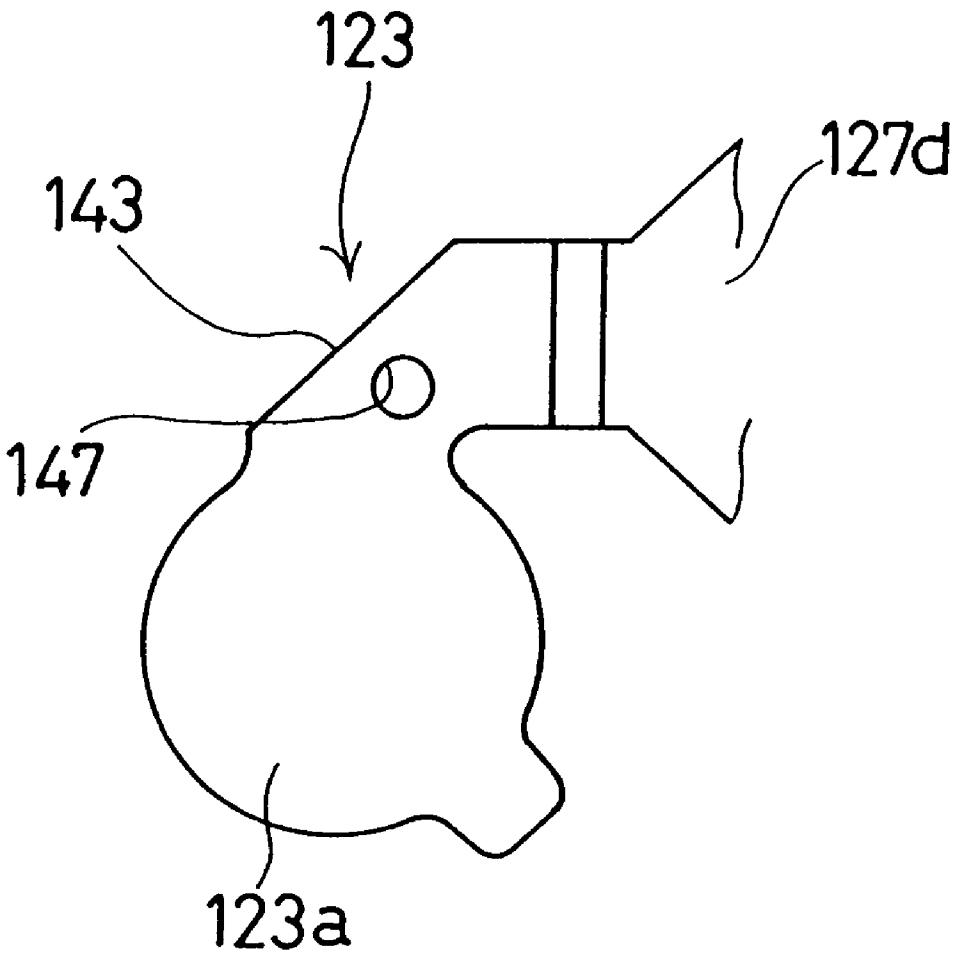

FIG.1

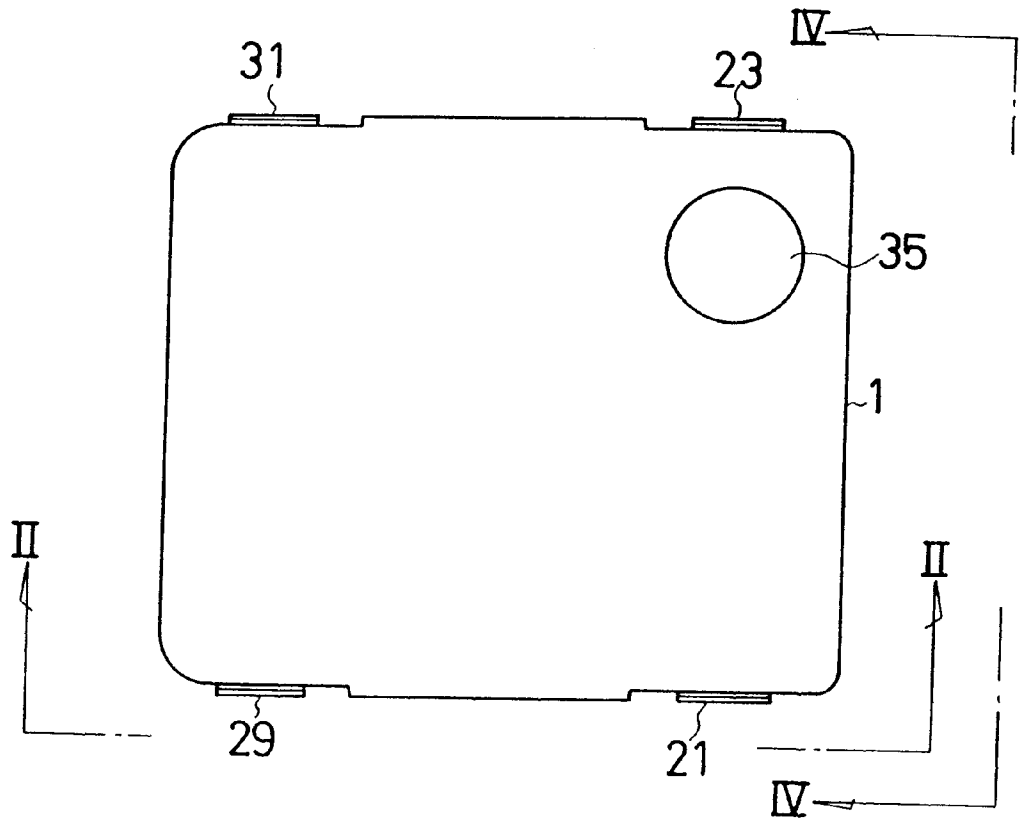

FIG.2

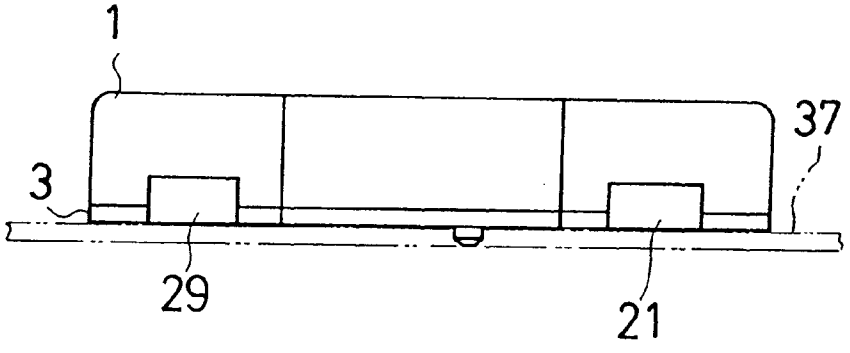

FIG.3

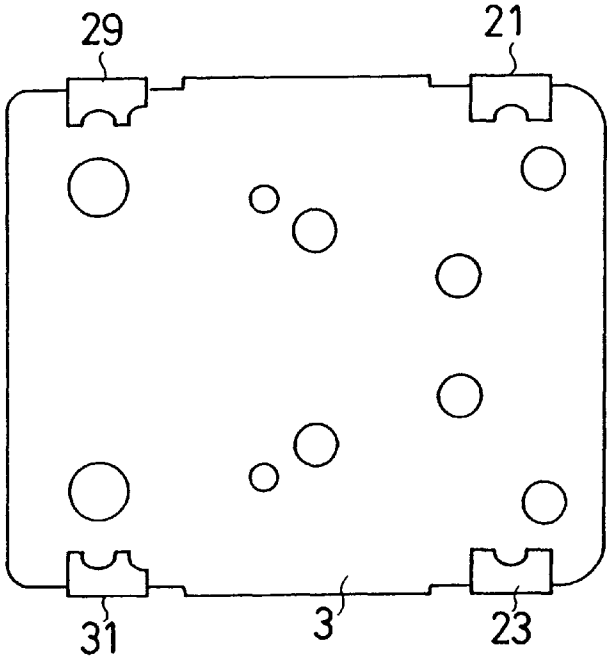

FIG.4

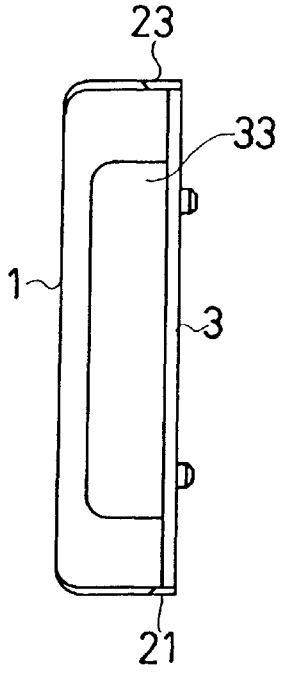

FIG.5

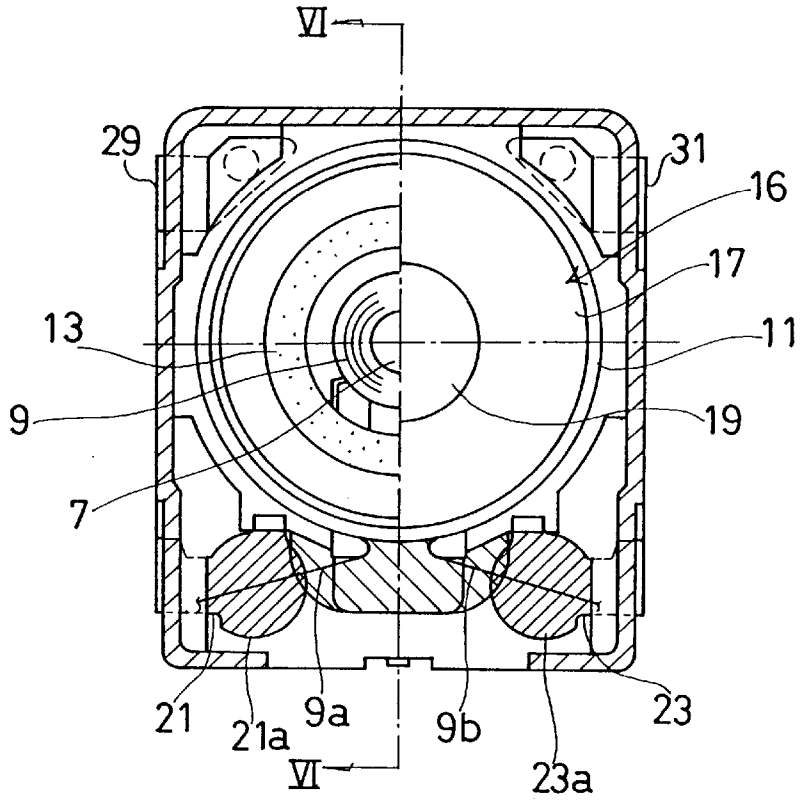
VI
29
31
16
17
13
11
9
19
7
21
21a
9a
9b
23
23a
VI

FIG.6

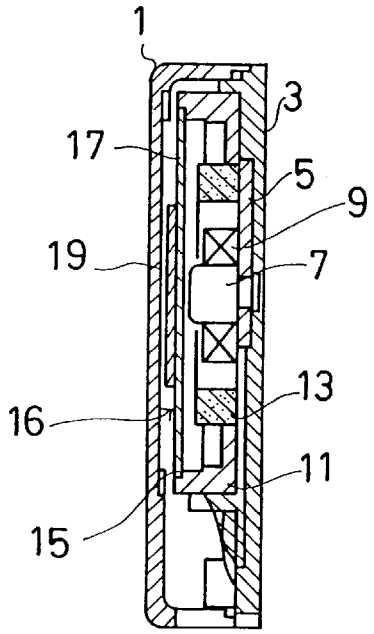
1
3
17
5
9
19
7
13
16
11
15

FIG.7

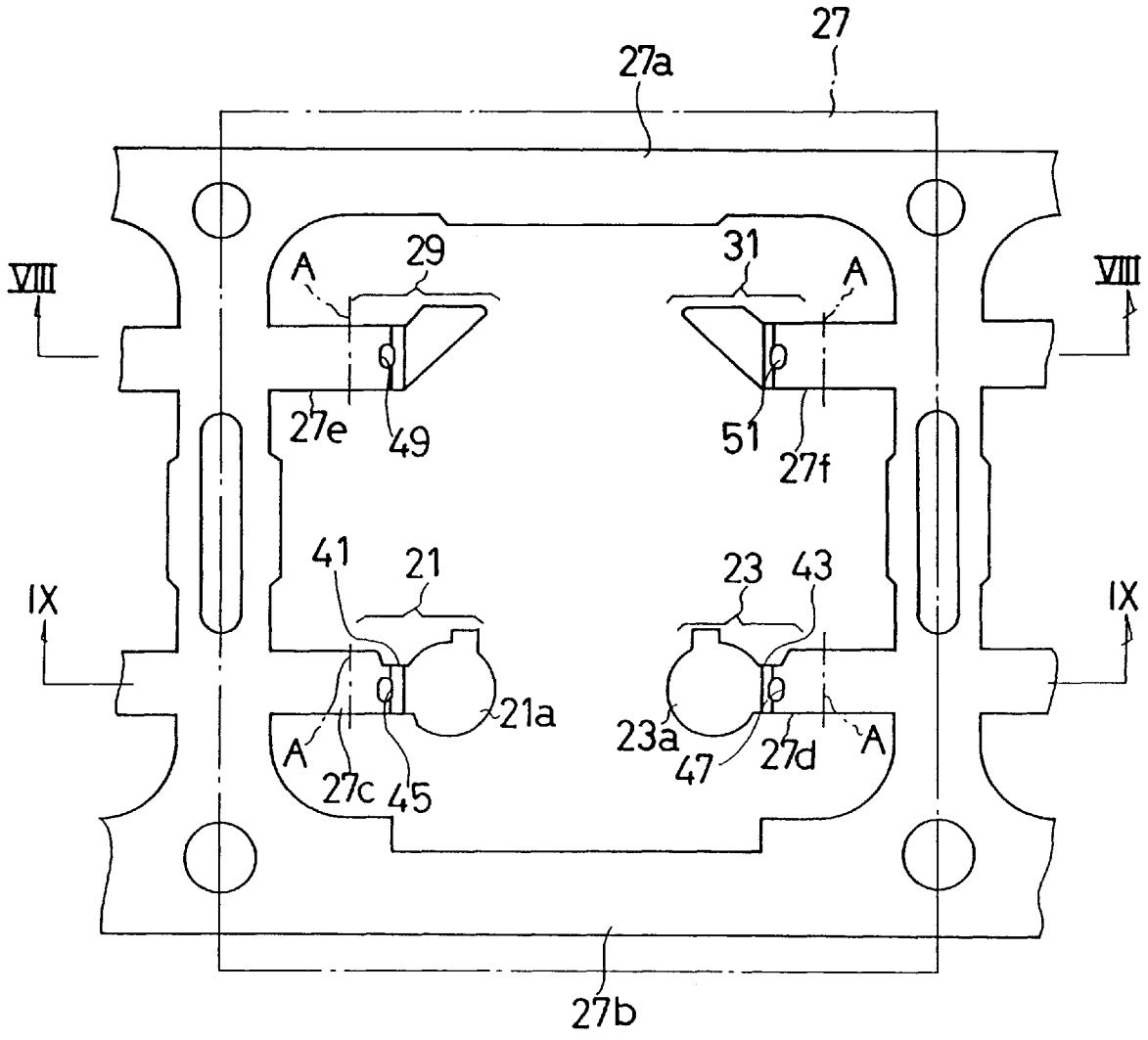
27
27a
VIII
VIII
A
29
31
A
27e
49
51
27f
IX
IX
41
21
23
43
21a
23a
47
27d
A
A
27c
45
27b

FIG.8

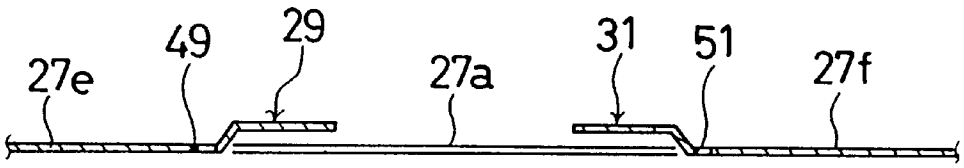

FIG.9

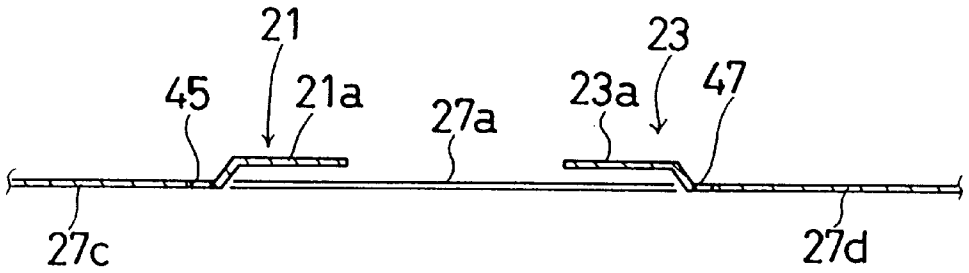

FIG.10

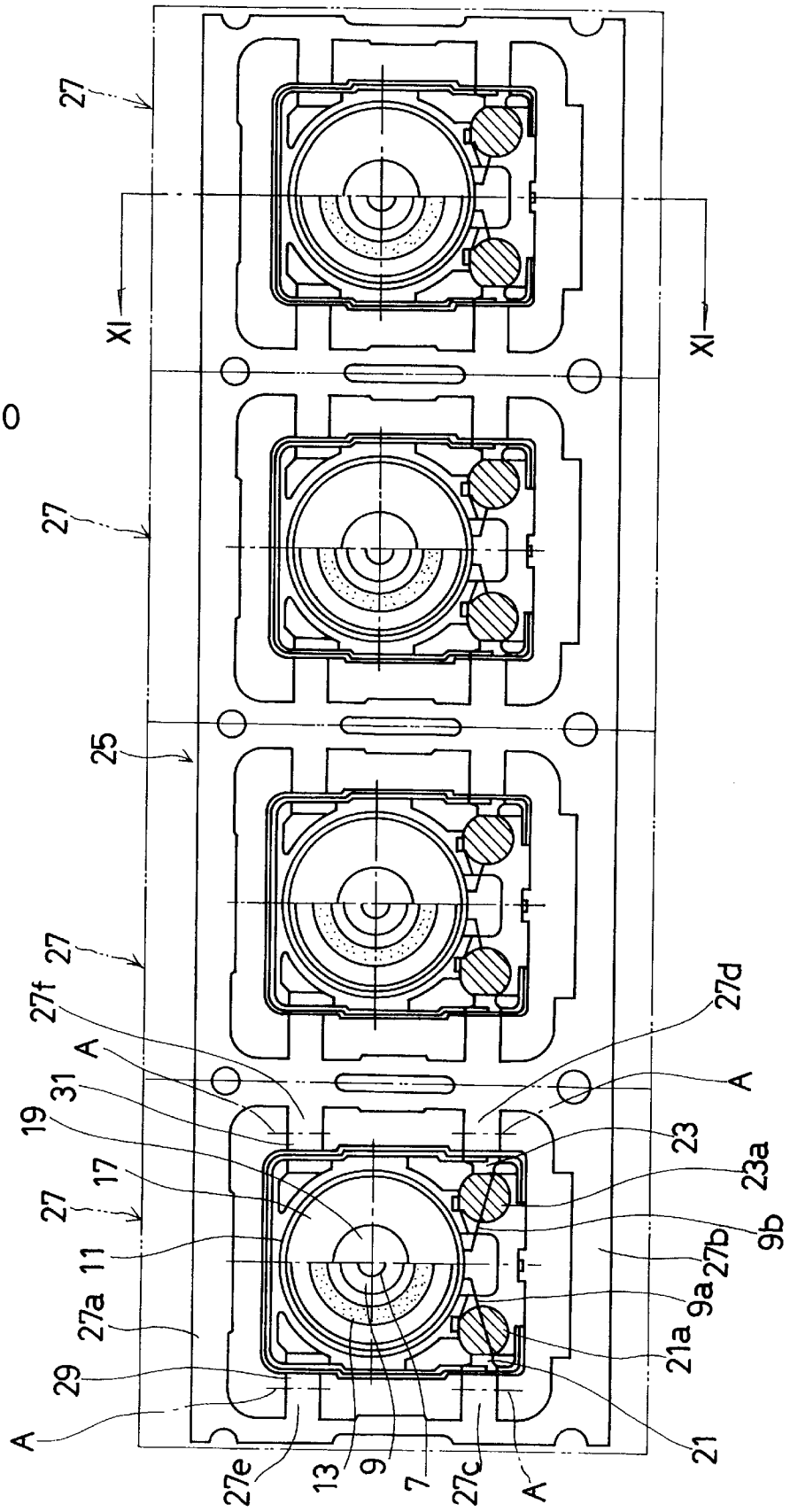
27
XI
XI
27
25
27
27f
A
31
19
17
27
11
27a
29
A
27e
13
9
7
27c
A
21
21a
9a
27b
9b
23a
23
A
27d

FIG.11

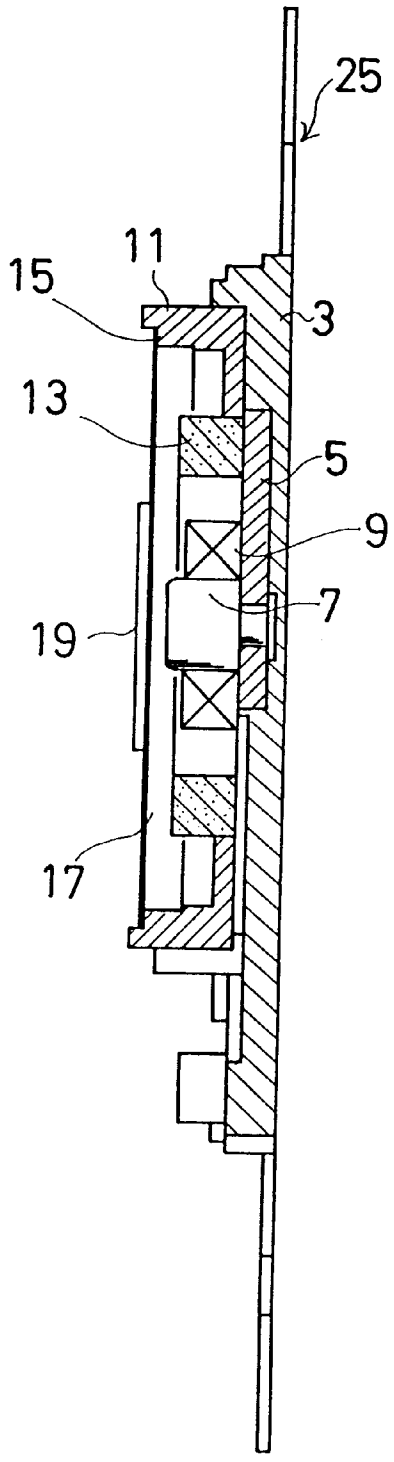

FIG. 12

SAMPLES		MATERIAL PROPERTY VALUES					EVALUATION RESULTS			
		TENSILE STRENGTH N/mm^2	0.2% YIELD STRENGTH N/mm^2	VICKERS HARDNESS Hv	CRYSTAL GRAIN SIZE G.S.No	THERMAL CONDUCTIVITY cal/cm/sec/°C	DEFORMATION IN PRESS	DAMAGES ON RESIN WHEN SOLDERING COIL TERMINALS	SOLDER WETTING PROPERTY	GENERAL EVALUATION
Fe-36Ni ALLOY	EXAMPLE 1	570 620 660	520 560 600	155 195 217	7.5 9.0 10.5	0.025	NONE NONE NONE	NONE NONE NONE	GOOD GOOD GOOD	GOOD GOOD GOOD
	COMPARATIVE EXAMPLE 1	490	290	140	6.0		OCCURRED	NONE	GOOD	NO GOOD
Fe-42Ni ALLOY	EXAMPLE 2	560 640	510 580	164 206	7.5 8.5	0.026	NONE NONE	NONE NONE	GOOD GOOD	GOOD GOOD
	COMPARATIVE EXAMPLE 2	500	300	144	6.0		OCCURRED	NONE	GOOD	NO GOOD
Fe-50Ni ALLOY	EXAMPLE 3	600 700	540 630	199 245	8.0 11.5	0.032	NONE NONE	NONE NONE	GOOD GOOD	GOOD GOOD
	COMPARATIVE EXAMPLE 3	520	310	160	6.5		OCCURRED	NONE	GOOD	NO GOOD
Fe-29Ni-17Co ALLOY	EXAMPLE 4	610 710	550 650	201 230	7.5 11.0	0.048	NONE NONE	NONE NONE	GOOD GOOD	GOOD GOOD
	COMPARATIVE EXAMPLE 4	530	320	140	6.5		OCCURRED	NONE	GOOD	NO GOOD
BRASS (C2600)	COMPARATIVE EXAMPLE 5	380 440	320 380	84 120	8.5 10.5	0.29	NONE NONE	OCCURRED OCCURRED	NO GOOD NO GOOD	NO GOOD NO GOOD
PHOSPHOR BRONZE (C5210)	COMPARATIVE EXAMPLE 6	590 580	490 460	182 175	12.0 9.0	0.15	NONE NONE	OCCURRED OCCURRED	GOOD GOOD	NO GOOD NO GOOD

FIG.13

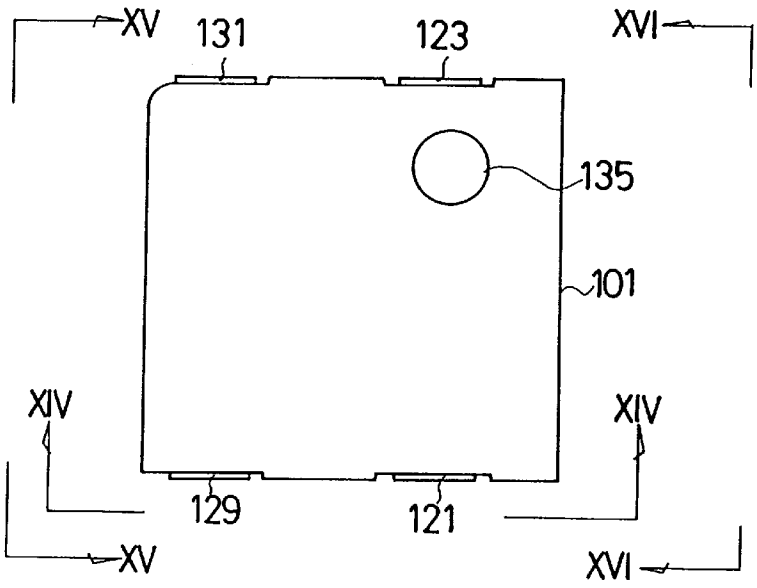

FIG.14

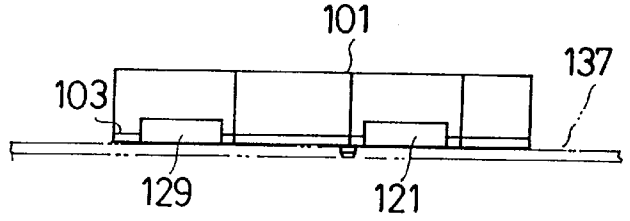

FIG.15

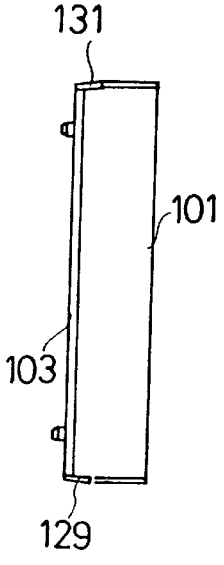

FIG.16

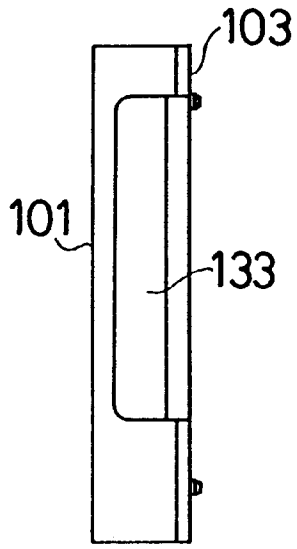

FIG.17

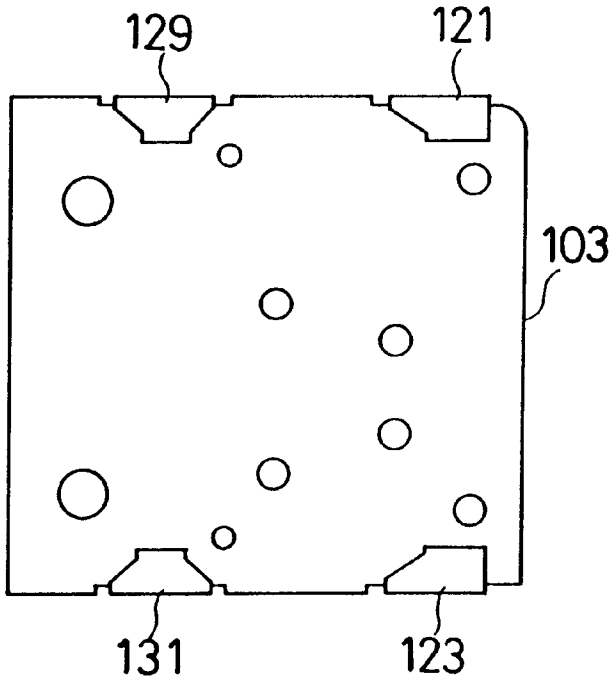

FIG.18

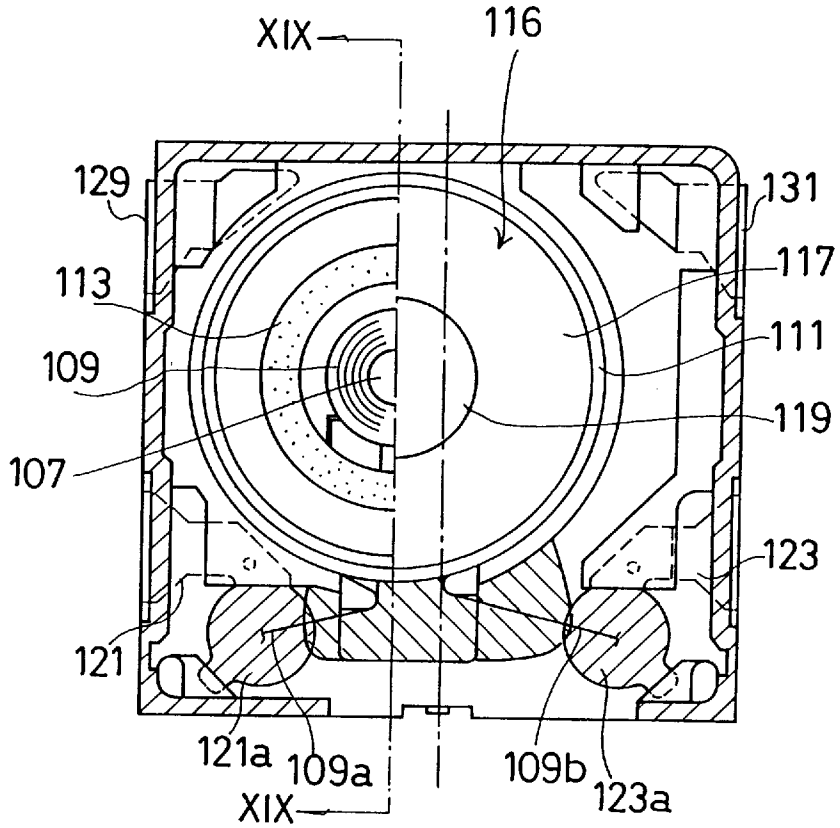
XIX
116
129
131
113
117
109
111
119
107
123
121
121a
109a
109b
123a
XIX

FIG.19

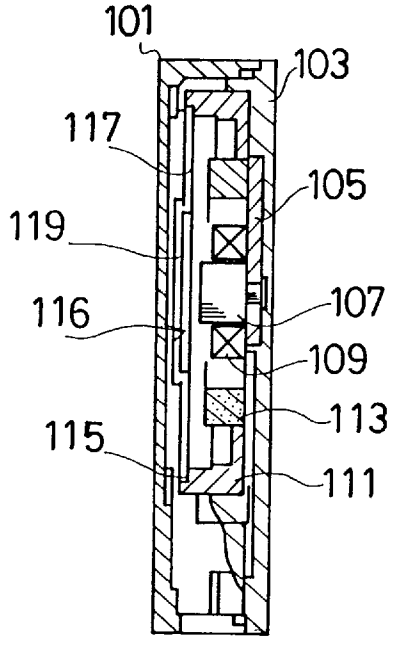
101
103
117
105
119
107
116
109
113
115
111

FIG. 20

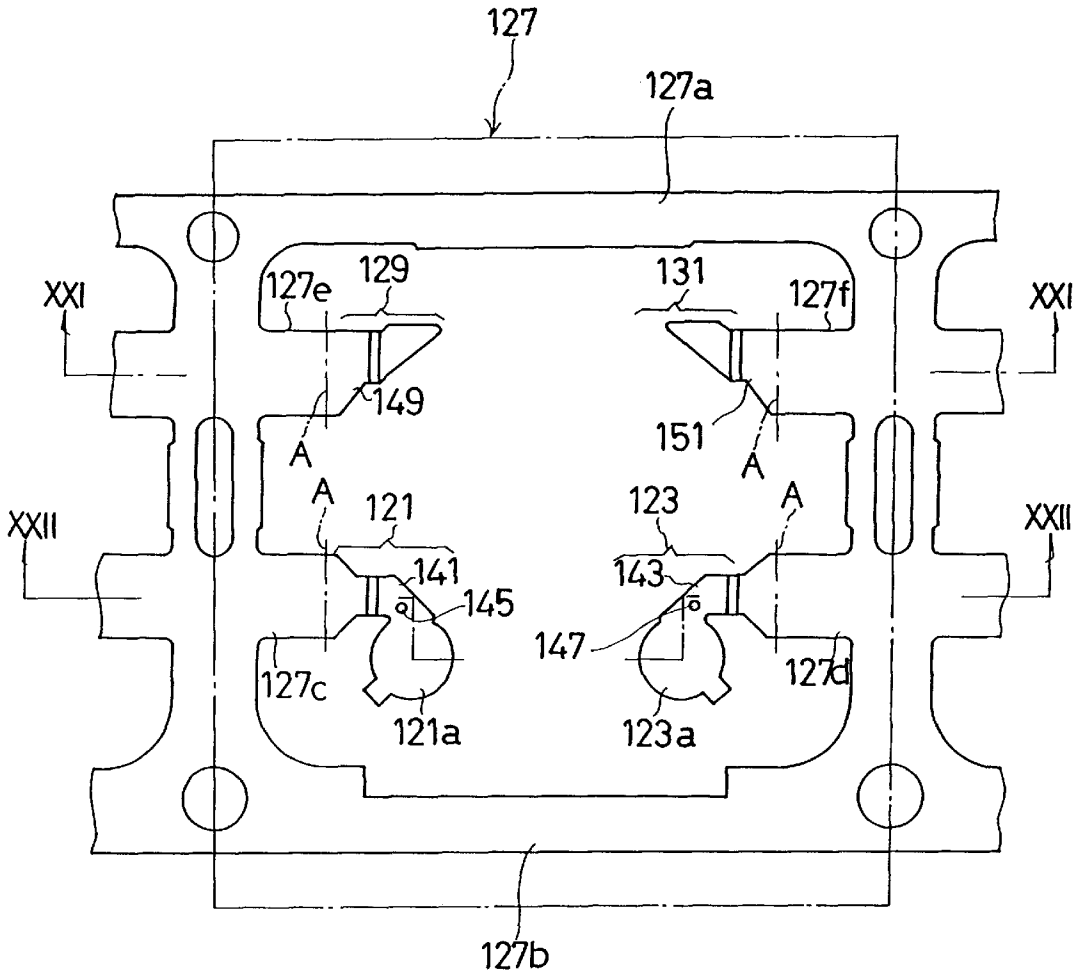
127
127a
XXI
127e
129
131
127f
XXI
149
151
A
A
A
A
XXII
121
123
XXII
141
143
145
147
127c
127d
121a
123a
127b

FIG. 21

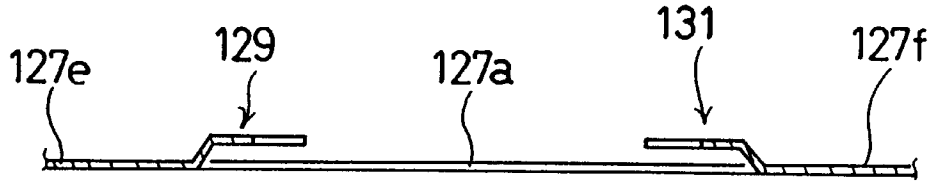

FIG. 22

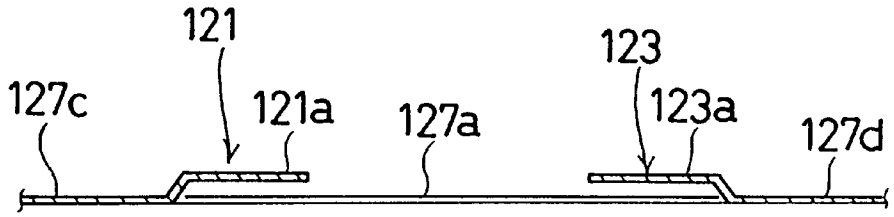

FIG. 23

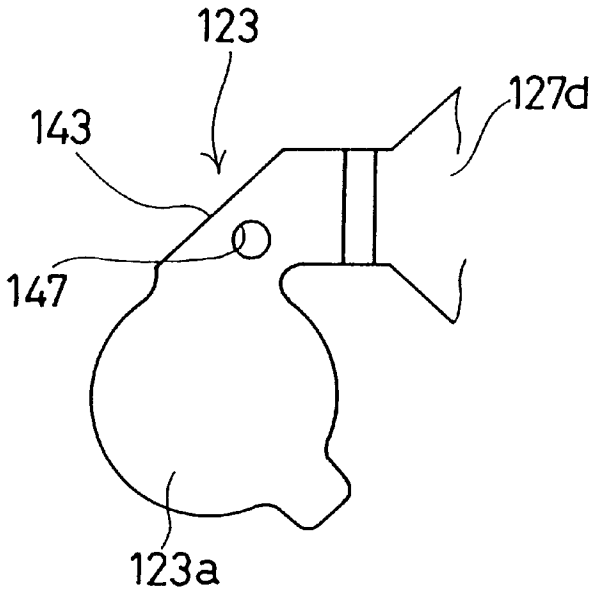

FIG.24

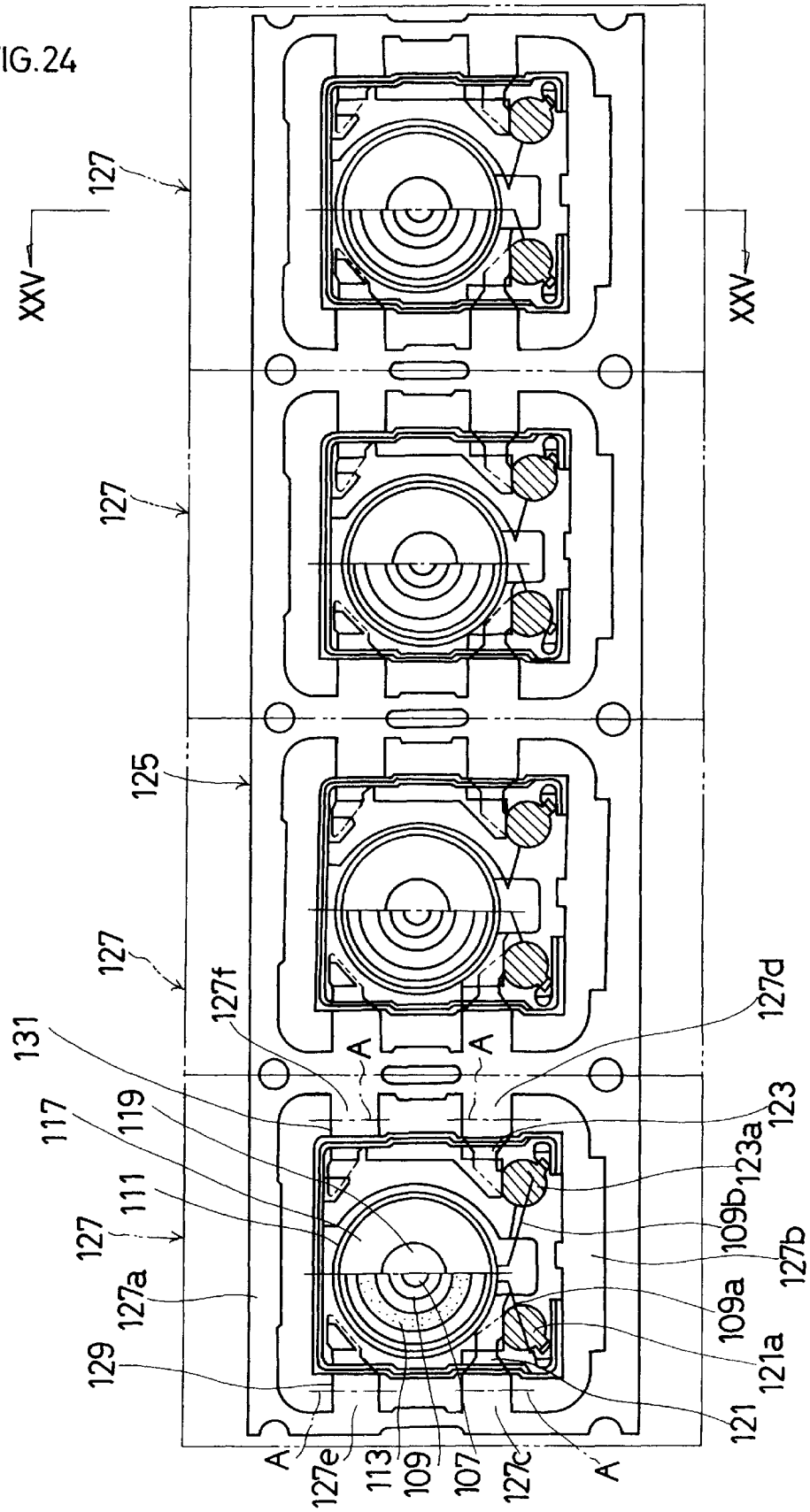
127
XXV
XXV
127
125
127
127f
A
A
131
117
119
111
127
127a
129
127d
123
123a
109b
127b
109a
121a
121
A
127e
113
109
107
127c
A

FIG. 25

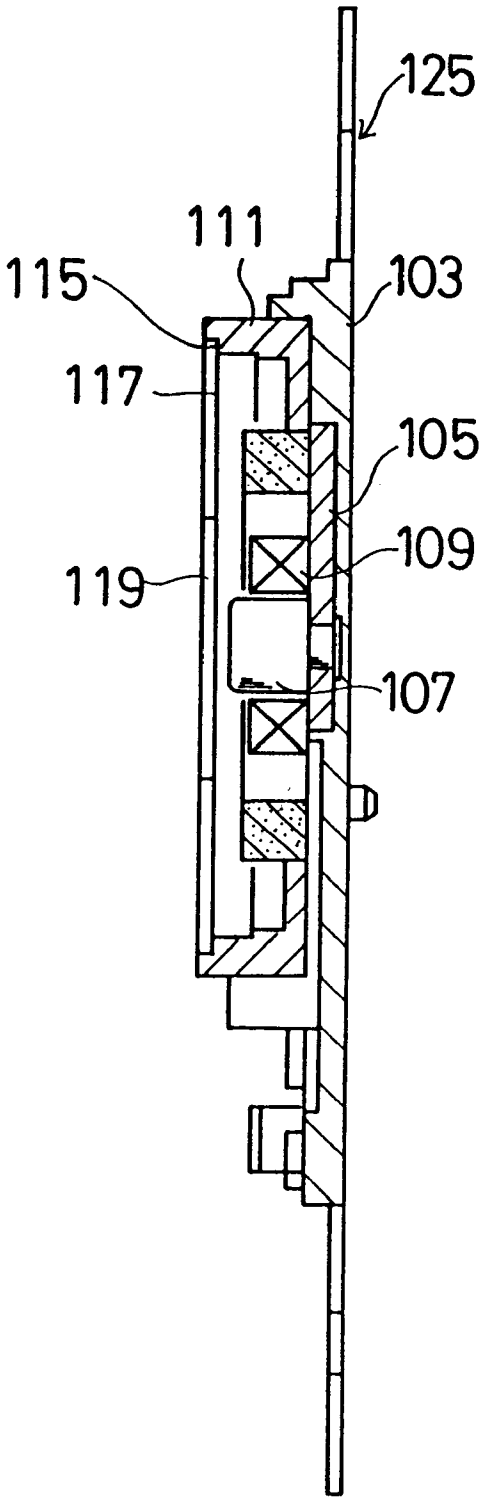

FIG. 26
(PRIOR ART)

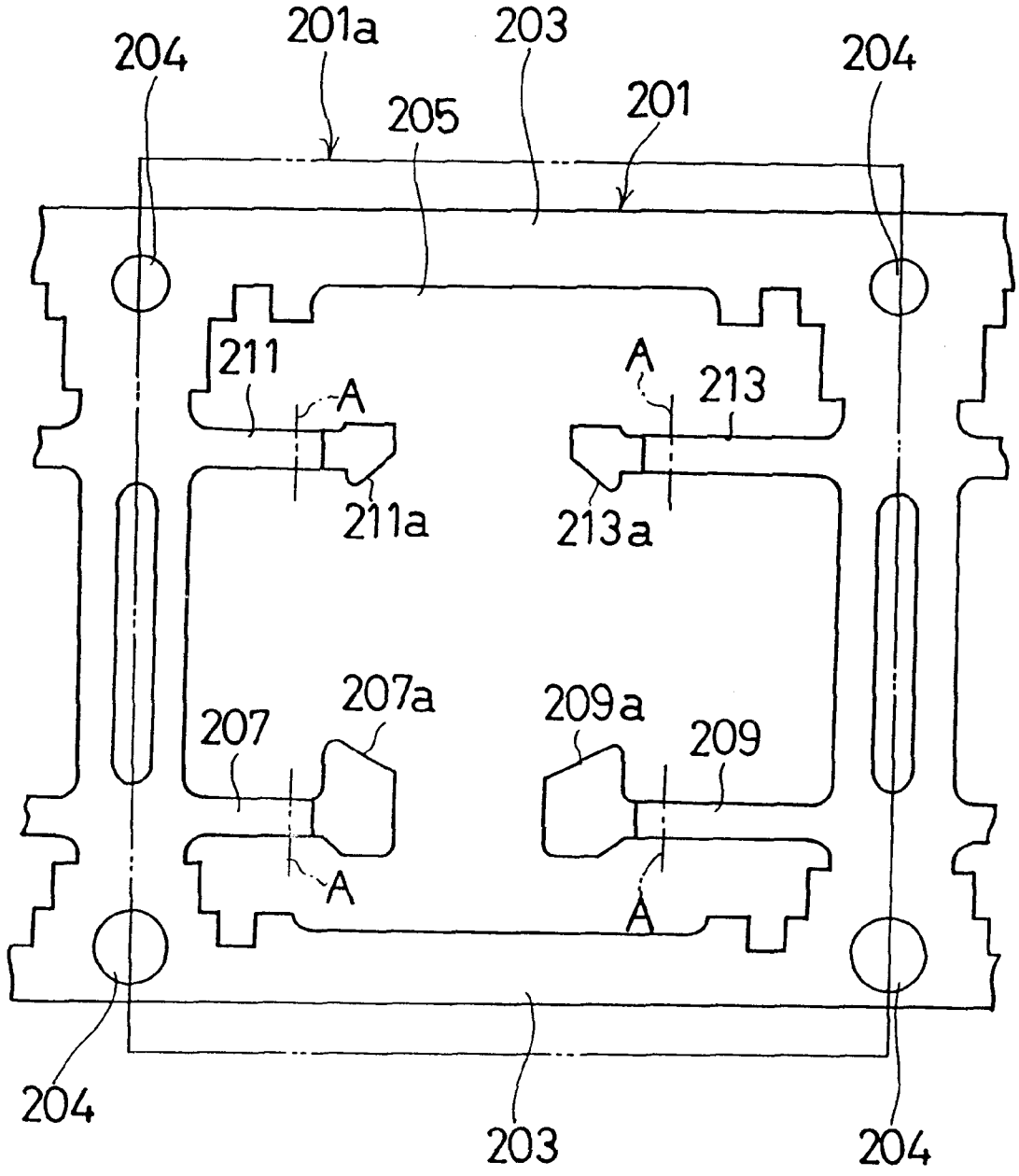

FIG. 27
(PRIOR ART)

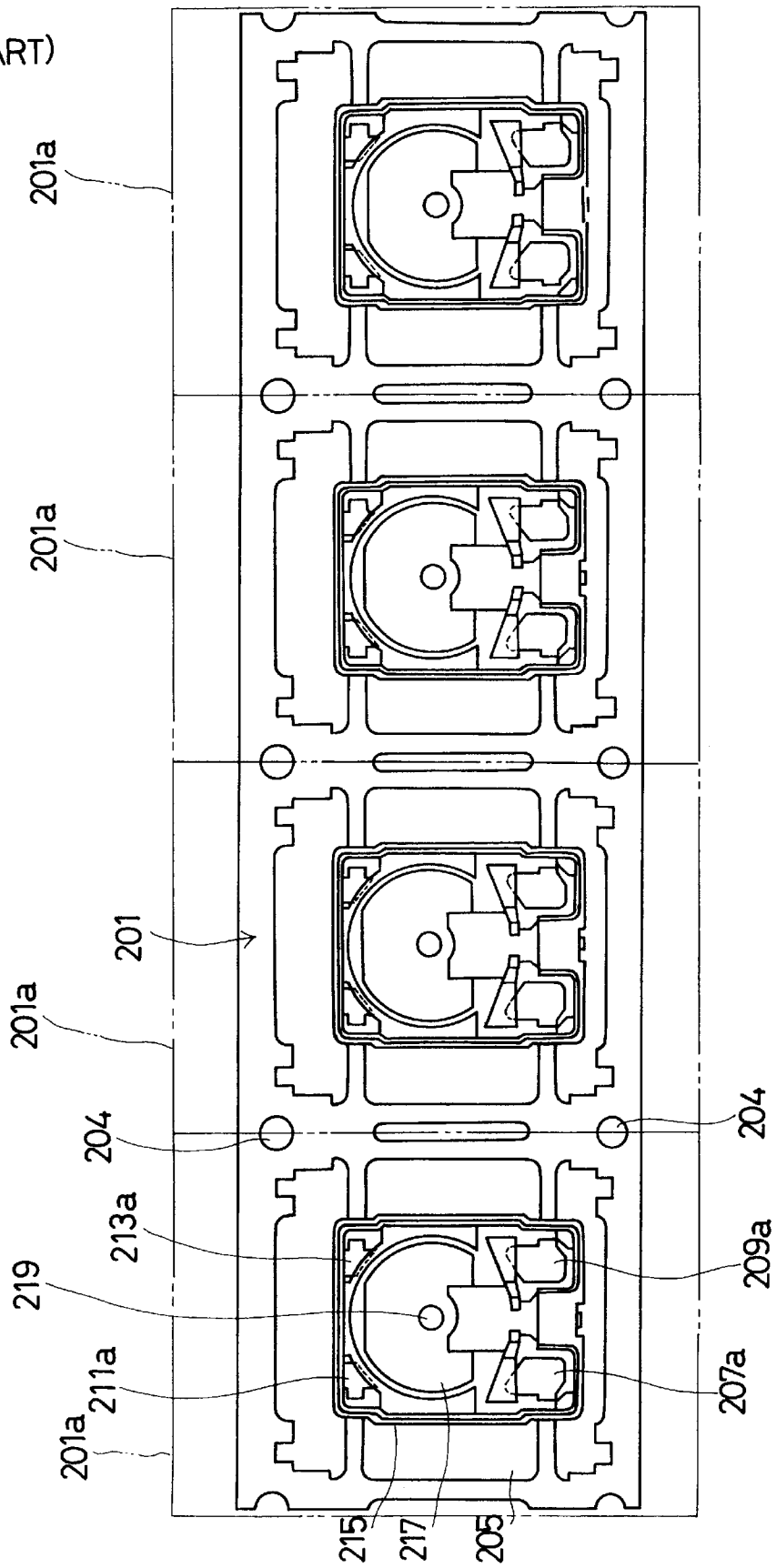

FIG. 28
(PRIOR ART)

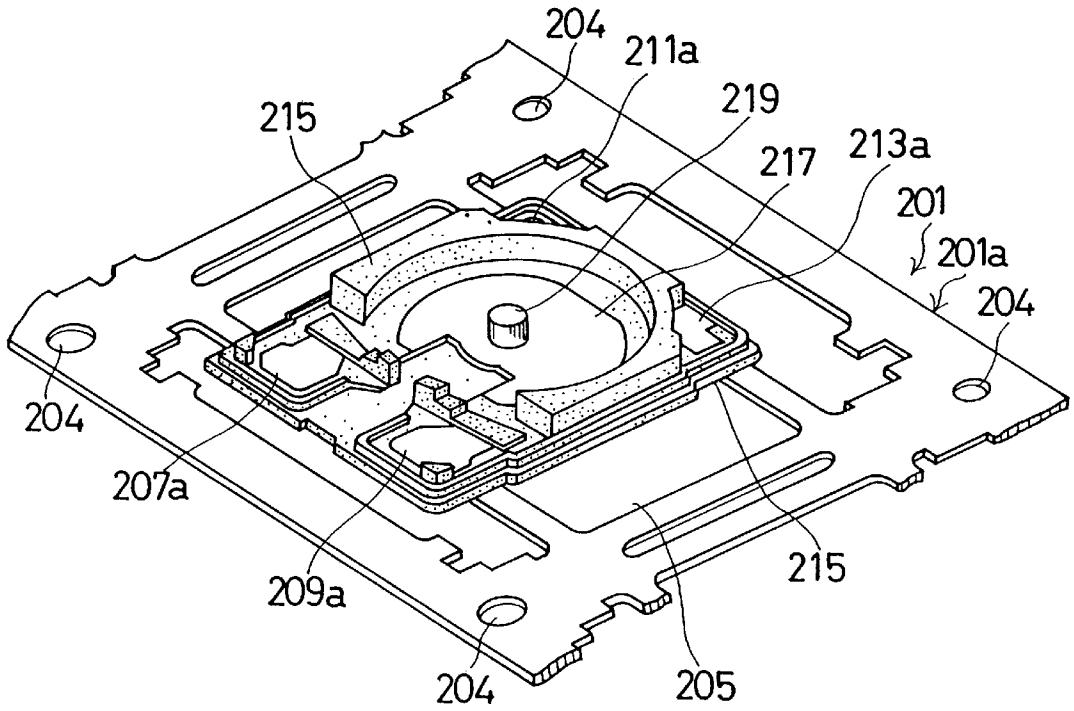

FIG.29
(PRIOR ART)

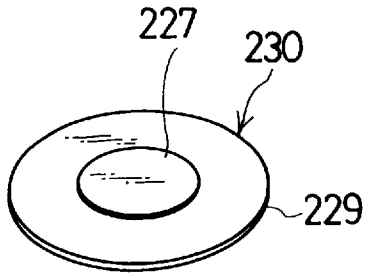

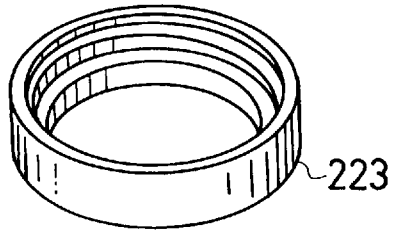

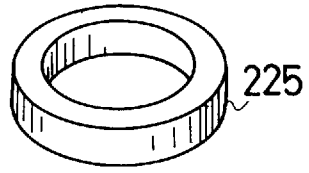

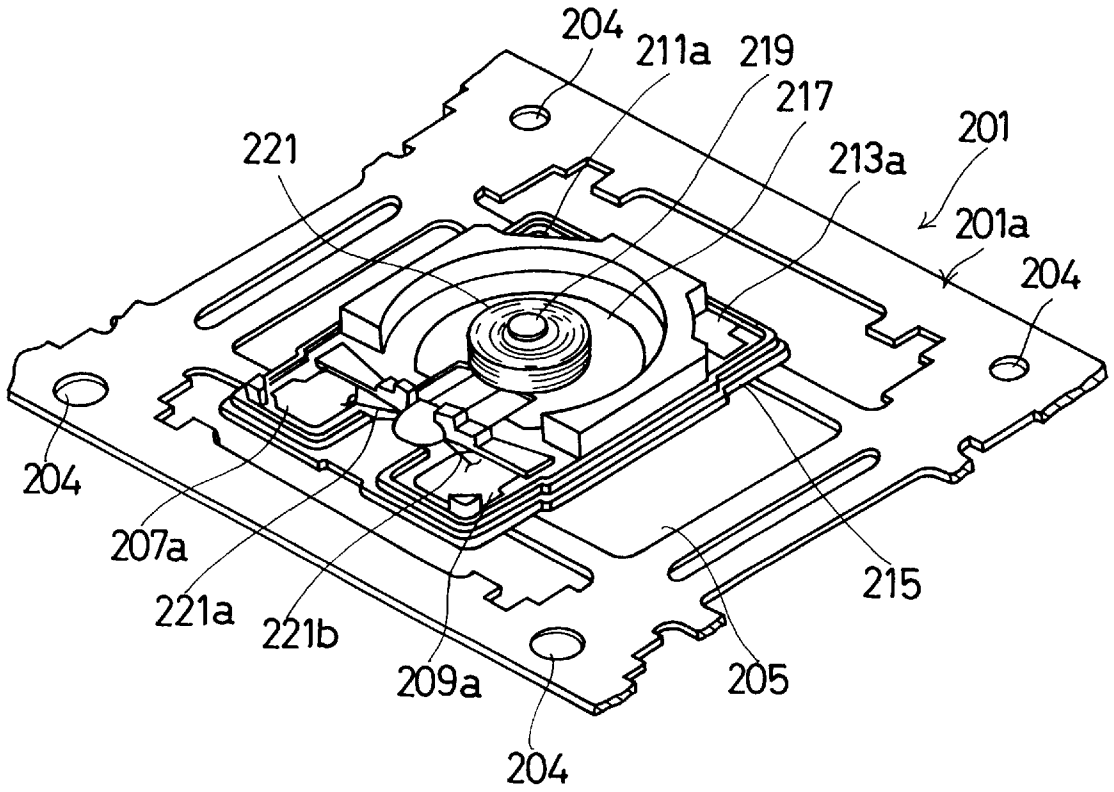

FIG.30
(PRIOR ART)

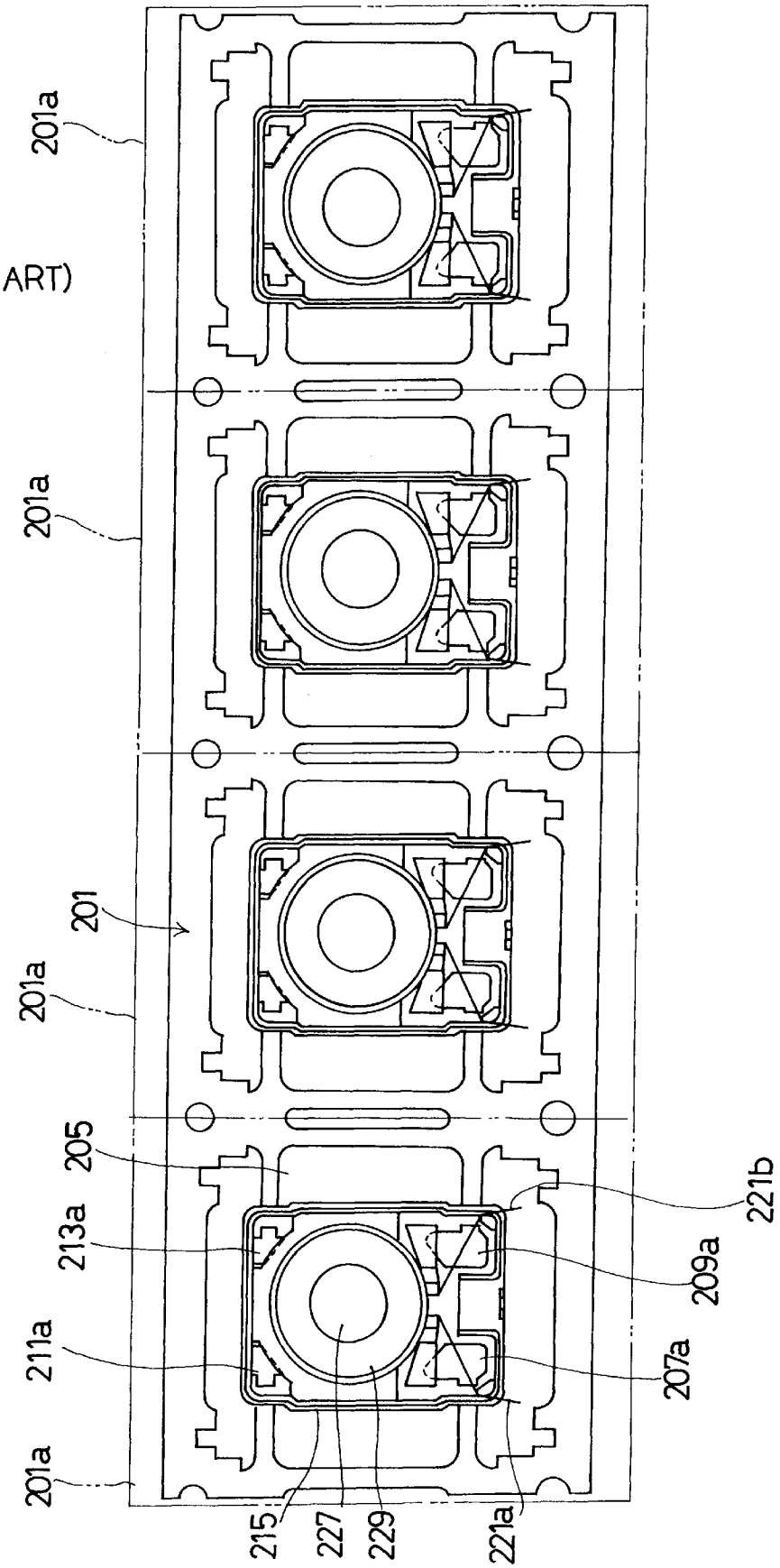

FIG.31
(PRIOR ART)

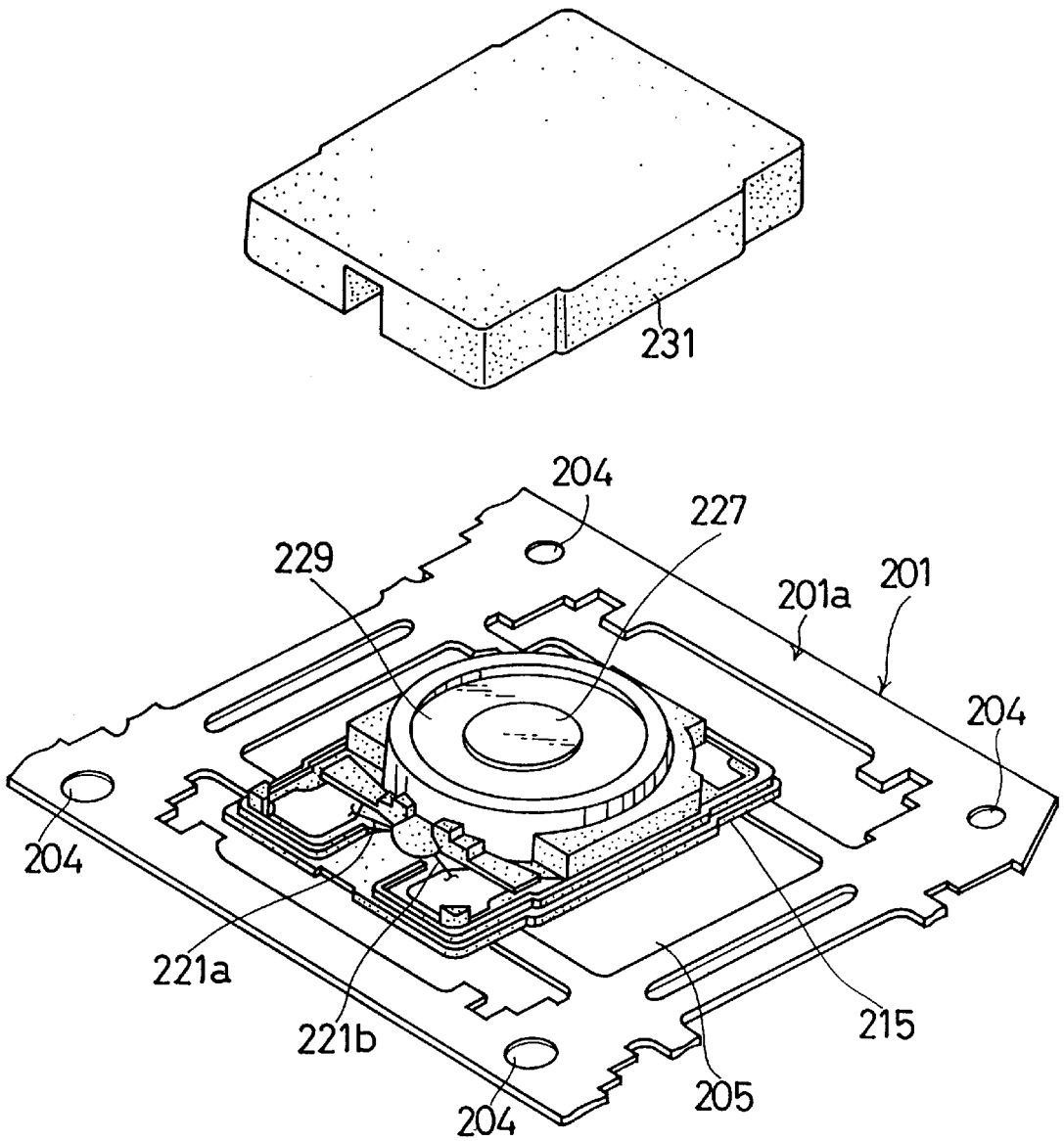

FIG.32
(PRIOR ART)

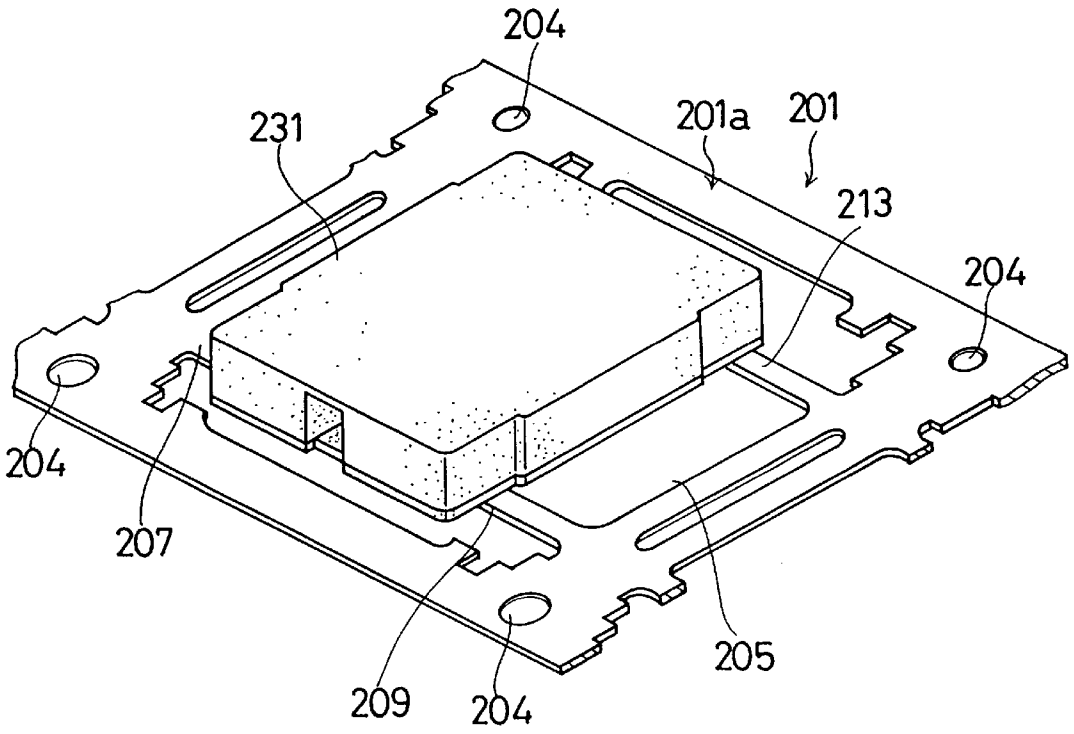

FIG.33
(PRIOR ART)

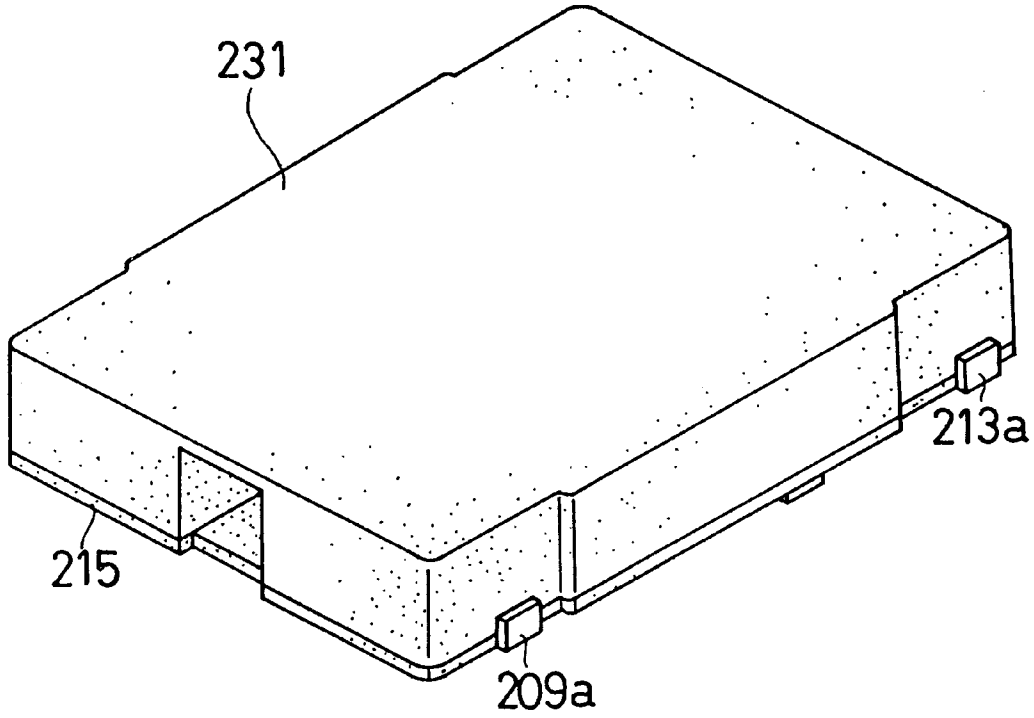

ELECTROACOUSTIC TRANSDUCER

BACKGROUND OF THE INVENTION

1. Field of the Invention

The present invention relates to an electroacoustic transducer for converting electric signals to acoustic signals, and, more particularly, to an electroacoustic transducer, using an improved material and structure for lead terminals, which suppresses the precipitation of the component that hinders the solder wetting property (good solder wetting property means that solder is well adhered to the lead terminals), which ensures a thinner lead frame, which accelerates the local heating of lands at the time of soldering coil terminals to the associated lands to thereby make it unnecessary to increase the heating temperature or heating time, thus preventing resin parts in the vicinity of the lands from being thermally damaged, and which prevents the soldered portion from being remelted by heat at the time the electroacoustic transducer is mounted on the mount board of an arbitrary electronic device.

2. Description of the Related Art

Referring to FIGS. **26** through **33**, the structure of a conventional electroacoustic transducer will be explained according to the fabrication steps. To begin with, the structure of a lead frame **201** shown in FIG. **26** will be described. The lead frame **201** has a plurality of lead frame elements **201***a* (each lead frame element is encircled by an imaginary line in FIG. **27**) coupled side by side to ensure the fabrication of a plurality of electroacoustic transducers, and FIG. **26** shows one of the lead frame elements **201***a*. Each lead frame element **201***a* has a pair of frame guide rails **203** and four guide holes **204**. Formed between the pair of frame guide rails **203** is space **205** in which projecting pieces **207**, **209**, **211** and **213** are protrusively provided. Those projecting pieces **207**, **209**, **211** and **213** have distal ends **207***a*, **209***a*, **211***a* and **213***a* which serve as lead terminals of a completed electroacoustic transducer. That is, the projecting pieces **207**, **209**, **211** and **213**, when cut along cut lines A in FIG. **26**, become the lead terminals **207***a*, **209***a*, **211***a* and **213***a*.

The aforementioned lead frame **201** has a structure as shown in FIG. **27** in which a plurality of lead frame elements **201***a* (four elements in this case) shown in FIG. **26** are coupled side by side. A base member **215** is formed on this lead frame **201**. Specifically, as shown in FIGS. **27** and **28**, the lead frame **201** is placed in a mold, and a yoke (base) **217** and the lead terminals **207***a*, **209***a*, **211***a* and **213***a* are formed by inserting (at this point of time, cutting along the cut lines A in FIG. **26** has not been carried out yet). At this time, the surface of the yoke **217** and the lands (soldering portions) of the lead terminals **207***a*, **209***a*, **211***a* and **213***a* are exposed. Note that a pole piece (core) **219** should have been formed previously in the center of the yoke **217**.

Then, various parts should be assembled to the structure shown in FIGS. **27** and **28**. First, a coil **221** is wound around the pole piece **219** of each lead frame element **201***a*, as shown in FIG. **29**. Then, a support ring **223** is placed inside the base member **215**, with a magnet **225** put in the ring **223**. Then, a diaphragm **230**, which has a magnetic piece **227** attached as an added mass to the center of an elastic plate **229**, is set on the support ring **223**. Next, both coil terminals **221***a* and **221***b* of the wound coil **221** are led on the lands of the lead terminals **207***a* and **209***a* and are soldered there and then cut away. The above-described work should be performed for all the lead frame elements **201***a*, thus yielding the state shown in FIG. **30**.

As shown in FIG. **31**, a case **231** should separately be formed of synthetic resin, and should be placed over the base

member **215** of each lead frame element **201***a*. Next, the case **231** is securely welded to the base member **215** by ultrasonic welding as shown in FIG. **32**. Through the work done up to this point, four electroacoustic transducers are fabricated on the lead frame **201**. Finally, the projecting pieces **207**, **209**, **211** and **213** of each lead frame element **201***a* are cut along the cut lines A shown in FIG. **26** to separate the individual electroacoustic transducers from one another. Then, the lead terminals **207***a*, **209***a*, **211***a* and **213***a* of each electroacoustic transducer are subjected to a forming process, providing a completed electroacoustic transducer as shown in FIG. **33**.

Each completed electroacoustic transducer is then mounted as informing means on an arbitrary electronic device such as a portable telephone or a pager. The electric connection on such an electronic device is generally made by reflow soldering.

The above-described conventional structure has the following shortcomings.

In general, an alloy such as brass or phosphor bronze is used for the above-described lead frame **201**. Those copper alloys are characterized by their relatively low cost and high thermal conductivity. Those copper alloys contain a component like Zn or Be, which deteriorates the solder wetting property and which is precipitated on a soldered plated layer as time goes, thus hindering the solder wetting property. Conventionally, therefore, double plated layers of Ni and Cu are provided to suppress the precipitation of the component which hinders the solder wetting property.

The conventional lead frame **201**, as has already been discussed above, is formed of an alloy of brass, phosphor bronze or the like which is relatively soft. Therefore, the required mechanical strength cannot be obtained unless the lead frame **201** is formed thicker to a certain degree.

The very fact that the material for the lead frame **201** has high thermal conductivity raises another problem. Specifically, in soldering both coil terminals **221***a* and **221***b* of the coil **221** to the lands of the lead terminals **207***a* and **209***a*, heat escapes from the lead terminals **207***a* and **209***a* toward the frame guide rails **203** of the lead frame **201**. This impairs the local heating on the lands. It is therefore difficult to execute the desired soldering at the normal heating temperature, so that the heating temperature or the heating time is increased. When the heating temperature or the heating time is increased, however, resin parts in the vicinity of the lands may be damaged by the heat.

In mounting a completed electroacoustic transducer on the mount board of an arbitrary electronic device like a portable telephone or a pager, the reliability of the soldered portions of the coil decreases. As discussed above, the lead frame **201** has high thermal conductivity and is thick, so that heat is easily transferred to the inner portions of the lead terminals from the outer portions thereof at the time of soldering to the mounting board. Accordingly, solder on the previously-soldered portions of the coil terminals may be remelted, causing the coil terminal **221***a* and **221***b* to come off. In this respect, the melting temperature of solder should be set high enough that solder is not remelted by the heating temperature at the time an electroacoustic transducer is mounted on the mounting board.

SUMMARY OF THE INVENTION

Accordingly, it is an object of the present invention to provide an electroacoustic transducer, using an improved material and structure for lead terminals, which suppresses the precipitation of the component that hinders the solder wetting property, which ensures a thinner lead frame, which

accelerates the local heating of lands at the time of soldering coil terminals to the associated lands to thereby make it unnecessary to increase the heating temperature or heating time, thus preventing resin parts in the vicinity of the lands from being thermally damaged, and which prevents the soldered portion from being remelted by heat at the time the electroacoustic transducer is mounted on the mount board of another arbitrary device.

To achieve the above object, according to one aspect of this invention, in an electroacoustic transducer having lead terminals, an outer case formed integral with the lead terminals and a drive section including a coil disposed in the outer case, the lead terminals are formed of an alloy consisting of 32 to 55% by weight of Ni and a remainder essentially of Fe, and having a crystal grain size number of 7.0 or greater.

In this electroacoustic transducer, the lead terminals may be formed of an alloy consisting of 32 to 55% by weight of Ni, 1.0% or less by weight of Mn, 1.0% or less by weight of Si, 0.05% or less by weight of C and a remainder essentially of Fe, and having a crystal grain size of number 7.0 or greater.

Further, as a material for the lead terminals, other than essential impurity elements, one or two or more of A1, Ti, V, Nb, Ta, Cr, Co, Cu, Mo, W and B may be added by a total amount of 0.01 to 2.0% by weight.

According to another aspect of this invention, an electroacoustic transducer having lead terminals, an outer case formed integral with the lead terminals and a drive section including a coil disposed in the outer case, wherein both coil terminals of the coil are connected to associated lands of the lead terminals, and thermal conduction suppressing sections are provided at proximal end sides of lands of the lead terminals for suppressing thermal conduction.

In this electroacoustic transducer, the thermal conduction suppressing sections may be narrow portions at the proximal ends of the lands.

Further, the thermal conduction suppressing sections may be openings provided at the proximal ends of the lands.

Furthermore, the thermal conduction suppressing sections may be narrow portions and openings at the proximal ends of the lands.

The electroacoustic transducer according to this invention may be an electromagnetic type.

According to the electroacoustic transducer embodying this invention, an improved material is used for the lead frame to suppress the precipitation of the component that hinders the solder wetting property, so that single plating is sufficient and the desired mechanical strength can be acquired even if the lead frame is formed thin.

The thermal conductivity is reduced to suppress heat discharge at the soldering time so that the lands can be locally heated. It is thus possible to efficiently execute local heating on the lands, thus eliminating the conventional requirement for increasing the heating temperature or the heating time at the soldering time. This can prevent resin parts in the vicinity of the lands from being thermally damaged.

Similar advantages can be acquired by providing the thermal conduction suppressing sections at the proximal ends of the lands.

Moreover, thermal transfer from the outer portions of the lead terminals to the inner portions is suppressed even when a completed electroacoustic transducer is mounted on the mount board of an arbitrary electronic device. This prevents the previously soldered portion from being remelted by heat at the time of mounting the electroacoustic transducer.

BRIEF DESCRIPTION OF THE DRAWINGS

FIG. **1** is a plan view of an electroacoustic transducer according to the first embodiment of this invention;

FIG. **2** is a diagram of the first embodiment as viewed from the line II—II in FIG. **1**;

FIG. **3** is a bottom view of the electroacoustic transducer according to the first embodiment;

FIG. **4** is a diagram of the first embodiment as viewed from the line IV—IV in FIG. **1**;

FIG. **5** is a plan view of the electroacoustic transducer according to the first embodiment, showing an elastic plate and an added mass with a part of a case removed, and showing a magnet and the like with parts of the elastic plate and added mass removed;

FIG. **6** is a cross-sectional view of the first embodiment taken along the line VI—VI in FIG. **5**;

FIG. **7** is a plan view showing the structure of a single lead frame element of a lead frame according to the first embodiment;

FIG. **8** is a cross-sectional view of the first embodiment taken along the line VIII—VIII in FIG. **7**;

FIG. **9** is a cross-sectional view of the first embodiment taken along the line IX—IX in FIG. **7**;

FIG. **10** is a plan view showing the structure of the lead frame according to the first embodiment;

FIG. **11** is a cross-sectional view of the first embodiment taken along the line XI—XI in FIG. **10**;

FIG. **12** is a diagram showing examples of this invention in comparison with comparative examples for explaining the action and advantages of the first embodiment;

FIG. **13** is a plan view of an electroacoustic transducer according to the second embodiment of this invention;

FIG. **14** is a diagram of the second embodiment as viewed from the line XIV—XIV in FIG. **13**;

FIG. **15** is a diagram of the second embodiment as viewed from the line XV—XV in FIG. **13**;

FIG. **16** is a diagram of the second embodiment as viewed from the line XVI—XVI in FIG. **13**;

FIG. **17** is a bottom view of the electroacoustic transducer according to the second embodiment;

FIG. **18** is a plan view of the electroacoustic transducer according to the second embodiment, showing an elastic plate and an added mass with a part of a case removed, and showing a magnet and the like with parts of the elastic plate and added mass removed;

FIG. **19** is a cross-sectional view of the second embodiment taken along the line XIX—XIX in FIG. **18**;

FIG. **20** is a plan view showing the structure of a single lead frame element of a lead frame according to the second embodiment;

FIG. **21** is a cross-sectional view of the second embodiment taken along the line VIII—VIII in FIG. **7**;

FIG. **22** is a cross-sectional view of the second embodiment taken along the line XXII—XXII in FIG. **20**;

FIG. **23** is a plan view showing the structure of the lead terminals according to the second embodiment;

FIG. **24** is a plan view showing the structure of the lead frame according to the second embodiment;

FIG. **25** is a cross-sectional view of the second embodiment taken along the line XXV—XXV in FIG. **24**;

FIG. **26** is a plan view showing the structure of a single lead frame element of a lead frame according to the prior art;

FIG. **27** is a plan view showing the structure of the lead frame according to the prior art;

FIG. **28** is a perspective view of the prior art showing a base member formed integral with the lead frame by inserting;

FIG. **29** is an exploded perspective view of the prior art showing how to assemble a support ring, a magnet and an elastic plate after the base member is formed integral with the lead frame by inserting;

FIG. **30** is a plan view of the prior art showing individual components assembled to each lead frame element of the lead frame;

FIG. **31** is an exploded perspective view of the prior art showing how to securely attach a case after assembling the individual components to each lead frame element of the lead frame;

FIG. **32** is an exploded perspective view of the prior art showing the case securely attached after assembling the individual components to each lead frame element of the lead frame; and

FIG. **33** is a perspective view of a completed electroacoustic transducer according to the prior art.

DETAILED DESCRIPTION OF THE PREFERRED EMBODIMENTS

First Embodiment

The first embodiment of the present invention will now be described with reference to FIGS. **1** through **12**. To begin with, the structure of an electromagnetic type electroacoustic transducer according to this embodiment will be discussed referring to FIGS. **5** and **6**. A case **1** has a base member **3** attached to its bottom. A base **5** and a core **7** are integrally secured on the base member **3** and inside the case **1**. The integration of the base **5** and the core **7** is called "pole piece." A coil **9** is wound around the core **7**. A support ring **11** is disposed around the coil **9**, and a magnet **13** is provided on the inner wall of the support ring **11**. A ring-like clearance is formed between the magnet **13** and the coil **9**. Formed at the left-hand end portion of the support ring **11** in FIG. **6** is a step portion **15** at which a diaphragm **16** is provided. This diaphragm **16** comprises an elastic plate (also called a resonance plate) **17** and a magnetic piece **19** attached as an added mass to the center portion of this elastic plate **17**.

In the thus constituted electromagnetic type electroacoustic transducer, as shown in FIG. **5**, lead terminals **21** and **23** have previously been attached in an integral manner to the base member **3** by inserting. In this case, as shown in FIG. **5**, both coil terminals **9***a* and **9***b* of the coil **9** are led out on lands **21***a* and **23***a* of the lead terminals **21** and **23** and are securely soldered to those lands.

The aforementioned inserting method will now be discussed specifically. As shown in FIG. **10**, a lead frame **25** previously patterned in a predetermined shape is prepared. The lead frame **25** has a plurality of lead frame elements **27** (surrounded by an alternate one long and two short dashes line in FIG. **10**) coupled side by side, so that a plurality of electromagnetic type electroacoustic transducers (four electroacoustic transducers in this case) are manufactured at the same time. FIG. **7** shows the details of the lead frame element **27**. The lead frame element **27** has a pair of frame guide rails **27***a* and **27***b* extending horizontally in FIG. **7**, and protruding pieces **27***c*, **27***d*, **27***e* and **27***f* are provided between the pair of frame guide rails **27***a* and **27***b*. The distal end portions of the protruding pieces **27***c* and **27***d* become the aforementioned lead terminals **21** and **23**.

As shown in FIG. **10**, one constituting element of each electromagnetic type electroacoustic transducer, specifically the pole piece, is placed at the proper positions of the lead frame elements **27** of the lead frame **25** in a mold (not shown). Then, a resin is filled in the mold to form the aforementioned base member **3**, at which time the lead frame elements **27** partially become integrated with the interior of the base member **3**. Thereafter, the remaining components, namely the coil **9**, the support ring **11**, the magnet **13** and the diaphragm **16**, are placed at the proper positions and the case **1** is securely attached to the base member **3**. Then, the lead frame elements **27** are cut along cut lines A shown in FIG. **7** and the exposed portions are bent, providing the state shown in FIGS. **1** to **4**. Besides the lead terminals **21** and **23**, terminal members **29** and **31** which do not perform electric functions are likewise integrated with the base member **3**, as shown in FIG. **7**. That is, the distal end portions of the protruding pieces **27***e* and **27***f* shown in FIG. **7** become the terminal members **29** and **31**.

The procedures for the insert formation are the same as those of the prior art illustrated in FIGS. **27–33**.

The appearance of the electromagnetic electroacoustic transducer is illustrated in FIGS. **1** through **4**. As shown in FIG. **4**, formed in one side of the case **1** is a sound port **33** through which sounds are output outside. As shown in FIG. **1**, a polarity mark **35** indicative of a polarity is inscribed on the top of the case **1**.

In the thus constituted electromagnetic type electroacoustic transducer, the elastic plate **17** integrally provided with the magnetic piece **19** is set to have a given polarity by the magnet **13**. When a current flows across the coil **9** via the lead terminals **21** and **23** under this situation, the core **7** is magnetized, generating a magnetic field at the distal end. When the magnetic pole of the core **7** induced by the coil **2** is different from the magnetic pole induced by the magnet **13** attached to the elastic plate **17**, the elastic plate **17** is attracted to the core **7**. When the former magnetic pole of the core **7** is the same as the latter magnetic pole induced by the magnet **13**, the elastic plate **17** is repelled away from the core **7**. By allowing the current to intermittently flow in either direction, therefore, the elastic plate **17** repeats the above-described operation. In other words, the elastic plate **17** vibrates at a given frequency, thus generating a sound.

This electromagnetic type electroacoustic transducer is then to be incorporated into any desired device, such as a portable telephone or a pager. To accomplish this, as shown in FIG. **2**, this electroacoustic transducer is attached to a mounting board **37** (indicated by an alternate one long and two short dashes line in FIG. **2**) of the electronic device in the illustrated manner, and is soldered thereto via the lead terminals **21** and **23** and the lead terminals **29** and **31** which do not perform electric functions.

The lead frame **25** according to this embodiment will now be described more specifically. To begin with, the material for the lead frame **25** will be discussed. The material for the lead frame **25** consists of 32 to 55% by weight of Ni, 1.0% or less by weight of Mn, 1.0% or less by weight of Si, 0.05% or less by weight of C, an essential impurity, and a remainder essentially of Fe, and has a crystal grain size number of 7.0 or greater.

As a material other than essential impurity elements, one or two or more of A1, Ti, V, Nb, Ta, Cr, Co, Cu, Mo, W and B may be added by a total amount of 0.01 to 2.0% by weight.

Adding such a material can increase the mechanical strength of the alloy that constitutes the frame member and can make the lead frame as thin as approximately 0.13 mm, so that a deformation preventing effect can be expected. The reason for setting the crystal grain size number to 7.0 or greater is to prevent deformation during a fine press work of the lead frame which has been made thin.

After an Fe-Ni alloy such as an Fe-Ni alloy essentially consisting of Fe and 36% by weight of Ni, an Fe-Ni alloy essentially consisting of Fe and 42% by weight of Ni, and an Fe-Ni alloy essentially consisting of Fe and 50% by weight of Ni was subjected to vacuum melting, the resultant alloy was subjected to casting, forging and hot rolling, and then to repetitive cold rolling and annealing, thus yielding rolled members having a thickness of 0.13 mm as the lead frame **25**. As another example, after an Fe-Ni alloy essentially consisting of Fe, 29% by weight of Ni and 17% by weight of Co was subjected to vacuum melting, the resultant alloy was subjected to casting, forging and hot rolling, and then to repetitive cold rolling and annealing, thus yielding a rolled member having a thickness of 0.13 mm.

Each of those rolled members was then subjected to a predetermined press work to yield the lead frame **25**.

The shape of the lead frame **25** will now be discussed. Let us now look at the portions of the projecting pieces **27***c* and **27***d* which serve as the lead terminals **21** and **23** in FIG. **7**. Proximal ends **41** and **43** of the lands **21***a* and **23***a* are made narrower with oval holes **45** and **47** formed there. Narrowing the proximal ends **41** and **43** and forming the holes **45** and **47** there suppress the thermal conduction from the lands **21***a* and **23***a* and accelerate local heating on the lands **21***a* and **23***a* at the soldering time.

Oval holes **49** and **51** are likewise formed in the lead terminals **29** and **31**, dummy terminals which do not electrically serve, in order to balance the heat volumes of the individual lead terminals **21**, **23**, **29** and **31** when a completed electroacoustic transducer is securely attached to the mounting board **37** in the state shown in FIG. **2**.

The above point will be described below more specifically. According to the prior art, when a completed electroacoustic transducer is mounted on the mounting board of an arbitrary electronic device by reflow soldering, improper soldering such as misalignment may occur for the following reason. The heat is easily transferred from the outer portions of the lead terminals to the inner portions at the soldering time so that whole lead terminals are heated. Because the volume (thermal capacity) of the entire lead terminals on the side where the coil terminals are soldered differs from that of the entire dummy lead terminals, the time for melting solder for the former lead terminals may differ from the solder melting time for the latter lead terminals depending on the soldering conditions. This may result in improper soldering such as misalignment.

According to this embodiment, by way of comparison, the lead frame has lower thermal conductivity and becomes thinner, and the thermal conduction suppressing sections are provided. This design makes it difficult for heat to be transferred from the outer portions of the lead terminals to the inner portions at the soldering time so that only the outer portions of the lead terminals which are to be soldered are heated, thus overcoming the above-discussed problem. As the thermal conduction suppressing sections are provided on the dummy lead terminals **29** and **31**, the volumes (thermal capacitances) of the terminals to be heated can be balanced out, thus preventing the occurrence of improper soldering such as misalignment.

This embodiment has the following advantages. First, a description will be given of the results of tests for explaining the advantages from the view point of the material for the lead frame **25**. Test pieces were prepared from unpressed lead frame members, electroacoustic transducers were produced using the actual lead frame **25**, and they were subjected to an evaluation test. The test pieces, which were strips having a width of 10 mm in the rolling direction and a length of 100 mm, are illustrated as Examples 1 to 4 in FIG. **12**.

A material property test and evaluation test were conducted on those test pieces and electroacoustic transducers. The contents of the tests are as follows; items a to e were conducted in the test concerning the material properties while items f to h were conducted in the evaluation test. Based on those items, general evaluation was made.

a: tensile test
b: 0.2% yield strength
c: Vickers hardness
d: crystal grain size
e: thermal conductivity
f: deformation in pressing
g: damage on resin when soldering coil terminals
h: solder wetting property ("good" indicates wetting of 95% or more as a result of leaving the test pieces at 150° C. for 24 hours and then dipping them in melted solder of the melting temperature of 235° C. for two seconds) i: general evaluation ("good" was given when the results of all the evaluation test items f to h were "good")

As apparent from FIG. **12**, the material for the lead frame **25** in this embodiment has a higher mechanical strength than the copper alloy used in the prior art, so that it can avoid deformation or the like in the press work and the assembling stage. The lead frame **25** can therefore be made thinner. Since this material had lower thermal conductivity than the copper alloy, thermal conduction from the lands **21***a* and **23***a* at the soldering time could be suppressed, thus permitting local heating on the lands **21***a* and **23***a*. This eliminated the need for increasing the heating temperature and the heating time, and could thus reduce the amount of heat required for the soldering work. Thermal damages on resin parts located in the vicinity of the lands **21***a* and **23***a* can therefore be prevented effectively.

Note that the soldering time was reduced by 64% to 1.6 seconds from 2.5 seconds which was needed conventionally.

Further, no degradation of the solder wetting property was seen in the 24-hour aging test at 150° C. Since there is less precipitation of the component that hinders the solder wetting property, single plating is sufficient.

Furthermore, the lead frame has lower thermal conductivity and becomes thinner, and the thermal conduction suppressing sections are provided, so that it becomes difficult for heat to be transferred from the outer portions of the lead terminals to the inner portions even when a completed electroacoustic transducer is mounted by solder onto the mounting board of an arbitrary electronic device. Therefore, solder even on the coil terminals which have previously been soldered will not be melted by heat.

A description will now be given of the advantages of the particular shape of the lead frame **25**, i.e., the provision of the narrow portions **41** and **43** and the holes **45** and **47** at the proximal ends of the lands **21***a* and **23***a*. The provision of the narrow portions **41** and **43** and the holes **45** and **47** at the proximal ends of the lands **21***a* and **23***a* reduces the mass of the portions which contribute to thermal conduction at the

soldering time. In the case where both coil terminals **21***a* and **21***b* of the coil **21** are soldered to and along the respective lands **21***a* and **23***a*, therefore, thermal conduction is suppressed, thus permitting local heating of the lands **21***a* and **23***a*. In other words, the lands **21***a* and **23***a* can be locally heated. This can eliminate the need for increasing the heating temperature and the heating time, and can thus reduce the amount of heat required in the soldering work. It is therefore possible to effectively prevent thermal damages on resin parts located in the vicinity of the lands **21***a* and **23***a*.

The same is true of the case where a completed electroacoustic transducer is securely soldered to the mounting board **37**. In this case, though the opposite ends of the lands **21***a* and **23***a* of the lead terminals **21** and **23** are heated, solder on the coil terminals which has previously been soldered does not melt by the heat because the lead frame **25** is designed to make thermal transfer to the lands **21***a* and **23***b* or the internal components difficult.

The same applies to the lead terminals **29** and **31**; the provision of the holes **49** and **51** reduces the mass of the portion which contributes to thermal conduction to balance the volumes (thermal capacitances) of the terminals to be heated, thus preventing the occurrence of improper soldering such as misalignment.

Second Embodiment

The second embodiment of the present invention will now be described with reference to FIGS. **13** through **25**. To begin with, the structure of an electromagnetic type electroacoustic transducer according to this embodiment will be discussed referring to FIGS. **18** and **19**. A case **101** has a base member **103** attached to its bottom. A base **105** and a core **107** are integrally secured on the base member **103** and inside the case **101**. The integration of the base **105** and the core **107** is called "pole piece." A coil **109** is wound around the core **107**. A support ring **111** is disposed around the coil **109**, and a magnet **113** is provided on the inner wall of the support ring **111**. A ring-like clearance is formed between the magnet **113** and the coil **109**. Formed at the left-hand end portion of the support ring **111** in FIG. **6** is a step portion **115** at which a diaphragm **116** is provided. This diaphragm **116** comprises an elastic plate (also called a resonance plate) **117** and a magnetic piece **119** attached as an added mass to the center portion of this elastic plate **117**.

In the thus constituted electromagnetic type electroacoustic transducer, as shown in FIG. **18**, lead terminals **121** and **123** have previously been attached in an integral manner to the base member **103** by inserting. In this case, as shown in FIG. **18**, both coil terminals **109***a* and **109***b* of the coil **109** are led out on lands **121***a* and **123***a* of the lead terminals **121** and **123** and are securely soldered to those lands.

The aforementioned inserting method will now be discussed specifically. As shown in FIG. **24**, a lead frame **125** previously patterned in a predetermined shape is prepared. The lead frame **125** has a plurality of lead frame elements **127** (surrounded by an alternate one long and two short dashes line in FIG. **24**) coupled side by side, so that a plurality of electromagnetic type electroacoustic transducers (four electroacoustic transducers in this case) are manufactured at the same time. FIG. **20** shows the details of the lead frame element **127**. The lead frame element **127** has a pair of frame guide rails **127***a* and **127***b* extending horizontally in FIG. **20**, and protruding pieces **127***c*, **127***d*, **127***e* and **127***f* are provided between the pair of frame guide rails **127***a* and **127***b*. The distal end portions of the protruding pieces **127***c* and **127***d* become the aforementioned lead terminals **121** and **123**.

As shown in FIG. **24**, one constituting element of each electromagnetic type electroacoustic transducer, specifically the pole piece, is placed at the proper positions of the lead frame elements **127** of the lead frame **125** in a mold (not shown). Then, a resin is filled in the mold to form the aforementioned base member **103**, at which time the lead frame elements **127** partially become integrated with the interior of the base member **103**. Thereafter, the remaining components, namely the coil **109**, the support ring **111**, the magnet **113** and the elastic plate **117**, are placed at the proper positions and the case **101** is securely attached to the base member **103**. Then, the lead frame elements **127** are cut along cut lines A shown in FIG. **20** and the exposed portions are bent, providing the state shown in FIGS. **13** to **17**. Besides the lead terminals **121** and **123**, terminal members **129** and **131** which do not perform electric functions are likewise integrated with the base member **103**, as shown in FIG. **20**. That is, the distal end portions of the protruding pieces **127***e* and **127***f* shown in FIG. **20** become the terminal members **129** and **131**.

The procedures for the insert formation are the same as those of the first embodiment.

The appearance of the electromagnetic electroacoustic transducer is illustrated in FIGS. **13** through **17**. As shown in FIG. **16**, formed in one side of the case **101** is a sound port **133** through which sounds are output outside. As shown in FIG. **13**, a polarity mark **135** indicative of a polarity is inscribed on the top of the case **101**.

As the action of the thus constituted electromagnetic type electroacoustic transducer is the same as that of the first embodiment, its description will not be repeated.

This electromagnetic type electroacoustic transducer is then to be incorporated into any desired device, such as a portable telephone or a pager. To accomplish this, as shown in FIG. **14**, this electroacoustic transducer is attached to a mounting board **137** (indicated by an alternate one long and two short dashes line in FIG. **14**) of the electronic device in the illustrated manner, and is soldered thereto via the lead terminals **121** and **123** and the lead terminals **129** and **131** which do not perform electric functions.

The lead frame **125** according to this embodiment will now be described more specifically. To begin with, the material for the lead frame **125** is the same as that of the first embodiment, so that it will not be discussed again.

The shape of the lead frame **125** will now be discussed. Let us now look at the portions of the projecting pieces **127***c* and **127***d* which serve as the lead terminals **121** and **123** in FIG. **20**. Proximal ends **141** and **143** of the lands **121***a* and **123***a* are made narrower with circular holes **145** and **147** formed there. Narrowing the proximal ends **141** and **143** and forming the holes **145** and **147** there suppress the thermal conduction from the lands **121***a* and **123***a* and accelerate local heating on the lands **121***a* and **123***a* at the soldering time.

As apparent from the above, the second embodiment can have the same advantages as those of the first embodiment.

This invention is not limited to the first and second embodiments, but may be modified in various other ways within the scope of the appended claims.

Although the improvement on the material for the lead frame and the provision of the thermal conduction suppressing sections are combined in the first and second embodiments, only one of the features may be employed.

The number of holes to suppress thermal conduction is not limited to the one discussed above.

Although the foregoing description has been given of the case where a lead frame is used, this invention can still be adapted to an electroacoustic transducer which uses no lead frame and simply has lead terminals. The thermal conduction suppressing sections are not restricted to those illustrated, but may take various other structures as long as they reduce the portion which contributes to thermal conduction.

What is claimed is:

1. An electroacoustic transducer comprising:

a case made of synthetic resin;

a lead terminal; and

a drive section including a coil;

wherein said lead terminal includes (1) a land portion placed adjacent to said case and to which an end of said coil is coupled by soldering, and (2) a projecting portion extending from said land portion for electrically coupling to an external device, said projecting portion comprises at least one of a narrowed portion and an opening for suppressing thermal conduction between said projecting portion and said land portion.

2. An electroacoustic transducer comprising:

a case made of synthetic resin;

a lead terminal placed adjacent to said case; and

a drive section disposed in said case and including a coil;

wherein said lead terminal has (1) an electrical connection portion for said coil at a first ends (2) an electrical connection portion for an external device at a second end, and (3) a thermal conduction suppression portion between said first and said second ends for suppressing thermal conduction therebetween, and

said thermal conduction suppression portion has a cross sectional area which is smaller than that of said first and said second ends.

3. An electroacoustic transducer comprising.

a case made of synthetic resin;

a lead terminal; and

a drive section including a coil;

wherein said lead terminal has (1) a land portion at a first end placed adjacent to said case and to which an end of said coil is coupled by soldering, (2) an electrical connection portion at a second end for an external device, and (3) a thermal conduction suppression portion between said first and said second ends for suppressing thermal conduction therebetween, and

said thermal conduction suppression portion has a cross sectional area which is smaller than that of said first and said second ends.

* * * * *